No. PF-2U8A

TCM®

PARTS CATALOGUE

FORKLIFT TRUCK

Diesel Powered

FD30C3Z
FD30T3Z

TCM CORPORATION

ご使用のまえに

このパーツカタログは，TCM フォークリフトの構成部品を収録しています。

部品ご注文について

部品ご注文の際は，必ず車両の形式・仕様・製造番号（号車），部品番号および注文数を明示してください。車両の製造番号（号車）は車両銘板に表示しています。

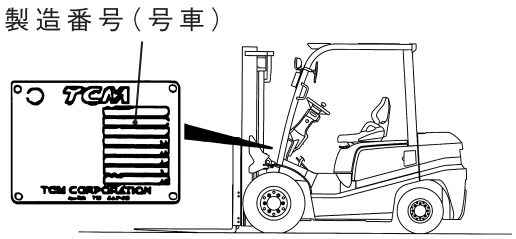

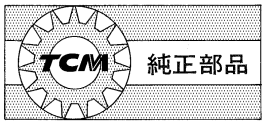

部品は，必ず「TCM 純正部品」をご使用ください。
純正部品以外の部品をご使用になり，故障が発生した場合は保証できません。

ご使用について

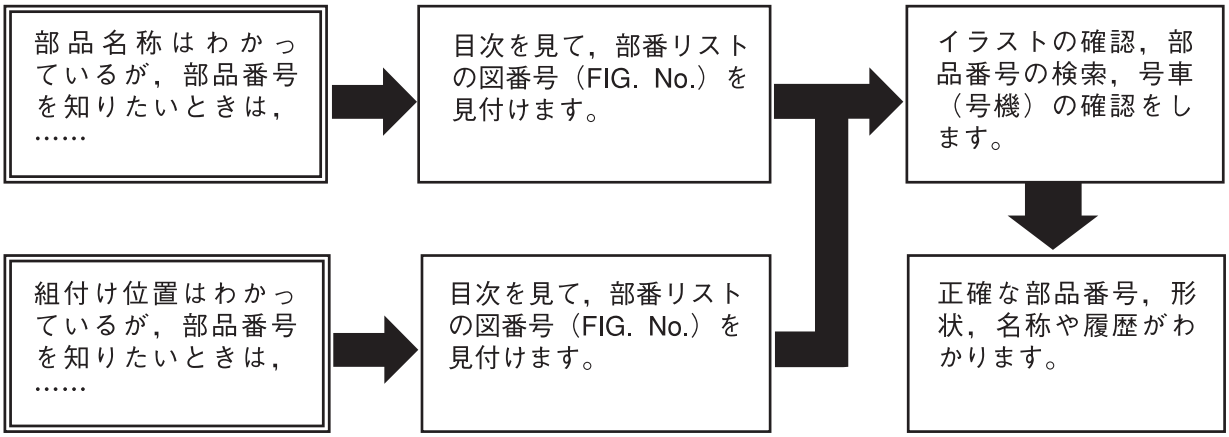

略語および記号

ＡＳＳＹ	組立品を示します。
ＲＨ	車両の前方向に向かって右側を示します。
ＬＨ	車両の前方向に向かって左側を示します。
ＡＲ	必要に応じた数を使用します。
＊	セットおよびキットの販売部品を示します。
Ｔ	厚みを示します。
＋	図示していません。
＃	単体販売しません。

部品は，品質向上のため予告なく変更することがありますので，あらかじめご了承ください。
詳細は，TCM 指定整備工場にご相談ください。

INTRODUCTION

This Parts Catalogue contains the component parts of the TCM FORKLIFT TRUCK.

How to order parts

When ordering, be sure to specify the model name, specification and serial number (machine number) of your machine, as well as the part number and desired quantity for each part. The machine serial number (machine number) is indicated on the machine name plate.

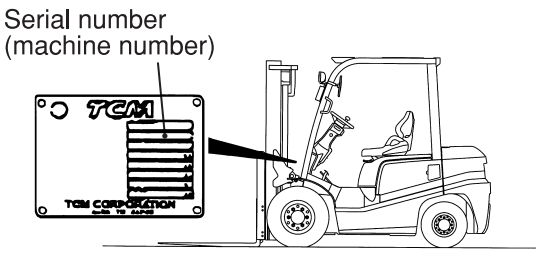

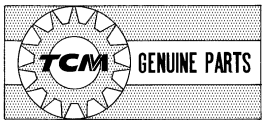

Always use "TCM's Genuine Parts". We cannot guarantee any loss or trouble attributable to other parts than ours.

How to use the Parts Catalogue

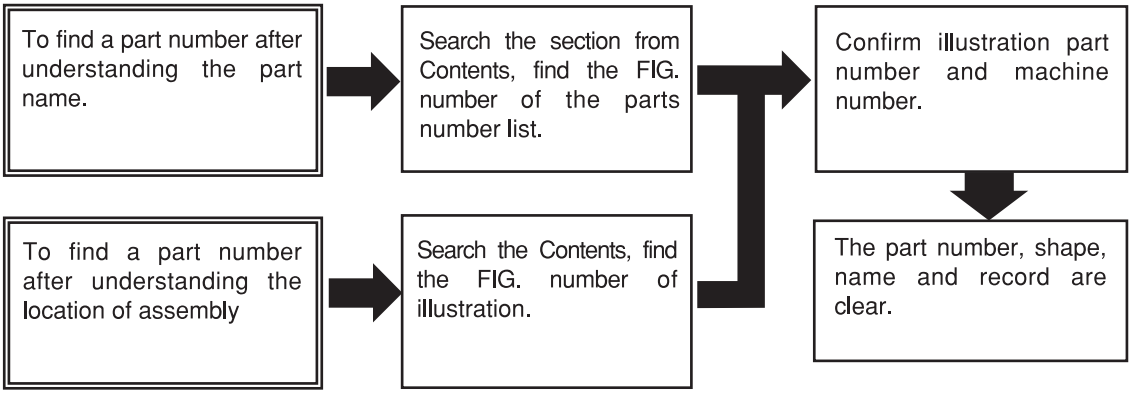

Abbreviations and symbols

ASSY ···	Assembled unit.
RH ·····	Right-hand when viewed forward on the truck.
LH ·····	Left-hand when viewed forward on the truck.
AR ·····	Quantity required.
* ·····	The marketable part set or kit.
T ·····	Thickness.
+ ·····	Not illustrated.
# ·····	Not sold separately.

Materals and specifications subject to change without notice.

CONTENTS　目次

CHASSIS ｼｬｰｼ

a	FD30C3Z
b	FD30T3Z

SECTION　部門	a	b	FIG.NO.
ENGINE MOUNT ｴﾝｼﾞﾝﾏｳﾝﾄ	○	○	1
AIR CLEANER ｴｱｰｸﾘｰﾅ	○	○	2
AIR DUCT ｴｱｰﾀﾞｸﾄ	○	○	3
COOLING UNIT (CLUTCH) ｸｰﾘﾝｸﾞﾕﾆｯﾄ	○		4
COOLING UNIT (TOR-CON) ｸｰﾘﾝｸﾞﾕﾆｯﾄ		○	5
FAN SHROUD ﾌｧﾝｼｭﾗｳﾄﾞ	○	○	6
RADIATOR PARTS & RESERVE TANK ﾗｼﾞｴｰﾀﾊﾟｰﾂ&ﾘｻﾞｰﾌﾞﾀﾝｸ	○	○	7
RADIATOR HOSE ﾗｼﾞｴｰﾀﾎｰｽ	○	○	8
DUST SCREEN [DSR006][DSR008] ﾀﾞｽﾄｽｸﾘｰﾝ	○	○	9
FUEL SYSTEM ﾌｭｰｴﾙｼｽﾃﾑ	○	○	10
EXHAUST SYSTEM ｴｷｿﾞｰｽﾄｼｽﾃﾑ	○	○	11
EXHAUST SYSTEM [TUE] ｴｷｿﾞｰｽﾄｼｽﾃﾑ	○	○	12
FRONT TUBE & JOINT ﾌﾛﾝﾄﾁｭｰﾌﾞ&ｼﾞｮｲﾝﾄ	○	○	13
COMBINATION METER ｺﾝﾋﾞﾈｰｼｮﾝﾒｰﾀ	○	○	14
FRONT GUARD WIRE HARNESS (CLUTCH) ﾌﾛﾝﾄｶﾞｰﾄﾞﾜｲﾔﾊｰﾈｽ	○		15
FRONT GUARD WIRE HARNESS (TOR-CON) ﾌﾛﾝﾄｶﾞｰﾄﾞﾜｲﾔﾊｰﾈｽ		○	16
COMBINATION SWITCH (CLUTCH) ｺﾝﾋﾞﾈｰｼｮﾝｽｲｯﾁ	○		17
COMBINATION SWITCH (TOR-CON) ｺﾝﾋﾞﾈｰｼｮﾝｽｲｯﾁ		○	18
ELECTRIC PARTS (CLUTCH) ｴﾚｸﾄﾘｯｸﾊﾟｰﾂ	○		19
ELECTRIC PARTS (TOR-CON) ｴﾚｸﾄﾘｯｸﾊﾟｰﾂ		○	20
ENGINE WIRE HARNESS (CLUTCH) ｴﾝｼﾞﾝﾜｲﾔﾊｰﾈｽ	○		21

CONTENTS　目次

a	FD30C3Z
b	FD30T3Z

CHASSIS ｼｬｰｼ

SECTION　部門	a	b	FIG.NO.
ENGINE WIRE HARNESS (TOR-CON) ｴﾝｼﾞﾝﾜｲﾔﾊｰﾈｽ		○	22
BATTERY ﾊﾞｯﾃﾘ	○	○	23
HEAD LAMP & FRONT COMBINATION LAMP ﾍｯﾄﾞﾗﾝﾌﾟ&ﾌﾛﾝﾄｺﾝﾋﾞﾈｰｼｮﾝﾗﾝﾌﾟ	○	○	24
REAR COMBINATION LAMP ﾘﾔｰｺﾝﾋﾞﾈｰｼｮﾝﾗﾝﾌﾟ	○	○	25
REAR COMBINATION LAMP [RRE][SCB001][SCBCR] ﾘﾔｰｺﾝﾋﾞﾈｰｼｮﾝﾗﾝﾌﾟ	○	○	26
LICENSE LAMP [RRE] ﾗｲｾﾝｽﾗﾝﾌﾟ	○	○	27
LICENSE LAMP [SCB001/RRE][SCBCR/RRE] ﾗｲｾﾝｽﾗﾝﾌﾟ	○	○	28
LICENSE LAMP [LP] ﾗｲｾﾝｽﾗﾝﾌﾟ	○	○	29
REAR WORKING LIGHT [RWLR] ﾘﾔｰﾜｰｷﾝｸﾞﾗｲﾄ	○	○	30
REAR WORKING LIGHT [RWLL] ﾘﾔｰﾜｰｷﾝｸﾞﾗｲﾄ	○	○	31
REAR WORKING LIGHT [RWL2] ﾘﾔｰﾜｰｷﾝｸﾞﾗｲﾄ	○	○	32
REAR WORKING LIGHT [RWL/FE][RWL/TUE] ｴﾚｸﾄﾘｯｸﾊﾟｰﾂ	○	○	33
REAR WORKING LIGHT WIRE HARNESS [RWL] ﾘﾔｰﾜｰｷﾝｸﾞﾗｲﾄﾜｲﾔﾊｰﾈｽ	○	○	34
REAR WORKING LIGHT WIRE HARNESS [RWL/BBR] ﾘﾔｰﾜｰｷﾝｸﾞﾗｲﾄﾜｲﾔﾊｰﾈｽ	○	○	35
REVOLVING LIGHT [RLY][RLR] ﾘﾎﾞﾙﾋﾞﾝｸﾞﾗｲﾄ	○	○	36
REVOLVING LIGHT WIRE HARNESS [RLY][RLR] ﾘﾎﾞﾙﾋﾞﾝｸﾞﾗｲﾄﾜｲﾔﾊｰﾈｽ	○	○	37
SPOT LIGHT [SPL] ｽﾎﾟｯﾄﾗｲﾄ	○	○	38
BACK BUZZER ﾊﾞｯｸﾌﾞｻﾞｰ	○	○	39
FAN [FAN] ﾌｧﾝ	○	○	40
LIFT LOCK VALVE WIRE HARNESS [VLL] ﾘﾌﾄﾛｯｸﾊﾞﾙﾌﾞﾜｲﾔﾊｰﾈｽ	○	○	41
AMMETER [AM] ｱﾝﾒｰﾀ	○	○	42

CONTENTS　目次

a	FD30C3Z
b	FD30T3Z

CHASSIS ｼｬｰｼ

SECTION　部門	a	b	FIG.NO.
SPEED METER [SM] ｽﾋﾟｰﾄﾞﾒｰﾀ	○	○	43
TORQUE CONVERTER THERMOMETER [TTM] ﾄﾙｸｺﾝﾊﾞｰﾀｻｰﾓﾒｰﾀ		○	44
TORQUE CONVERTER PRESSURE METER [TPM] ﾄﾙｸｺﾝﾊﾞｰﾀﾌﾟﾚｯｼｬﾒｰﾀ		○	45
SPEED DETECTOR UNIT [SAS] ｽﾋﾟｰﾄﾞﾃﾞｨﾃｸﾀﾕﾆｯﾄ	○	○	46
SPEED ALARM SYSTEM [SASB] ｽﾋﾟｰﾄﾞｱﾗｰﾑｼｽﾃﾑ	○	○	47
SPEED ALARM SYSTEM [SASR] ｽﾋﾟｰﾄﾞｱﾗｰﾑｼｽﾃﾑ	○	○	48
SPEED ALARM SYSTEM [SASC] ｽﾋﾟｰﾄﾞｱﾗｰﾑｼｽﾃﾑ	○	○	49
OK MONITOR [OKM] OKﾓﾆﾀ	○	○	50
INTERLOCK (CLUTCH):[SIL] ｲﾝﾀｰﾛｯｸ	○		51
INTERLOCK (TOR-CON):[SIL] ｲﾝﾀｰﾛｯｸ		○	52
DRIVE UNIT MOUNT (CLUTCH) ﾄﾞﾗｲﾌﾞﾕﾆｯﾄﾏｳﾝﾄ	○		53
DRIVE UNIT MOUNT (TOR-CON) ﾄﾞﾗｲﾌﾞﾕﾆｯﾄﾏｳﾝﾄ		○	54
CHANGE LEVER (CLUTCH) ﾁｪﾝｼﾞﾚﾊﾞｰ	○		55
CLUTCH (CLUTCH) ｸﾗｯﾁ	○		56
MISSION CASE (CLUTCH) ﾐｯｼｮﾝｹｰｽ	○		57
MISSION GEAR (CLUTCH) ﾐｯｼｮﾝｷﾞﾔｰ	○		58
TORQUE CONVERTER CASE (TOR-CON) ﾄﾙｸｺﾝﾊﾞｰﾀｹｰｽ		○	59
CHARGING PUMP (TOR-CON) ﾁｬｰｼﾞﾝｸﾞﾎﾟﾝﾌﾟ		○	60
MISSION CASE (TOR-CON) ﾐｯｼｮﾝｹｰｽ		○	61
CLUTCH PACK (TOR-CON) ｸﾗｯﾁﾊﾟｯｸ		○	62
CONTROL VALVE (TOR-CON) ｺﾝﾄﾛｰﾙﾊﾞﾙﾌﾞ		○	63

CONTENTS　目次

CHASSIS ｼｬｰｼ

a	FD30C3Z
b	FD30T3Z

SECTION　部門	a	b	FIG.NO.
DRIVE AXLE ﾄﾞﾗｲﾌﾞｱｸｽﾙ	○	○	64
DRUM HUB ﾄﾞﾗﾑﾊﾌﾞ	○	○	65
PROPELLER SHAFT ﾌﾟﾛﾍﾟﾗｼｬﾌﾄ	○	○	66
REDUCTION & DIFFERENTIAL ﾘﾀﾞｸｼｮﾝ&ﾃﾞｨﾌｧﾚﾝｼｬﾙ	○	○	67
REDUCTION ﾘﾀﾞｸｼｮﾝ	○	○	68
DIFFERENTIAL ﾃﾞｨﾌｧﾚﾝｼｬﾙ	○	○	69
WHEEL BRAKE ﾎｲｰﾙﾌﾞﾚｰｷ	○	○	70
STEERING WHEEL UNIT ｽﾃｱﾘﾝｸﾞﾎｲｰﾙﾕﾆｯﾄ	○	○	71
ORBITROL ｵｰﾋﾞｯﾄﾛｰﾙ	○	○	72
ORBITROL FITTING ｵｰﾋﾞｯﾄﾛｰﾙﾌｨｯﾃｨﾝｸﾞ	○	○	73
STEERING AXLE ｽﾃｱﾘﾝｸﾞｱｸｽﾙ	○	○	74
AXLE SUPPORT ｱｸｽﾙｻﾎﾟｰﾄ	○	○	75
HUB NUT ﾊﾌﾞﾅｯﾄ	○	○	76
FENDER ﾌｪﾝﾀﾞ	○	○	77
FRONT WHEEL ﾌﾛﾝﾄﾎｲｰﾙ	○	○	78
FRONT WHEEL [TJ F][TJSF][TS F] ﾌﾛﾝﾄﾎｲｰﾙ	○	○	79
FRONT WHEEL [TSUF][TUJF][TUSF][TUWF][TUGF] ﾌﾛﾝﾄﾎｲｰﾙ	○	○	80
FRONT WHEEL [TRAF] ﾌﾛﾝﾄﾎｲｰﾙ	○	○	81
FRONT WHEEL [TUJSF] ﾌﾛﾝﾄﾎｲｰﾙ	○	○	82
FRONT WHEEL [TJ W][TJSW][TS W] ﾌﾛﾝﾄﾎｲｰﾙ	○	○	83
FRONT WHEEL [TUJW][TUSW][TUWW][TUGW] ﾌﾛﾝﾄﾎｲｰﾙ	○	○	84

CONTENTS　目次

a	FD30C3Z
b	FD30T3Z

CHASSIS ｼｬｰｼ

SECTION　部門	a	b	FIG.NO.
FRONT WHEEL [TJ W28][TJSW28][TS W28] ﾌﾛﾝﾄﾎｲｰﾙ	○	○	85
REAR WHEEL ﾘﾔｰﾎｲｰﾙ	○	○	86
REAR WHEEL [DR R] ﾘﾔｰﾎｲｰﾙ	○	○	87
REAR WHEEL [TJ R][TJSR][TS R] ﾘﾔｰﾎｲｰﾙ	○	○	88
REAR WHEEL [(TJ R,TJSR,TS R)/DR R] ﾘﾔｰﾎｲｰﾙ	○	○	89
REAR WHEEL [TSUR][TUJR][TUSR][TUWR][TUGR] ﾘﾔｰﾎｲｰﾙ	○	○	90
REAR WHEEL [TUJR/DR R] ﾘﾔｰﾎｲｰﾙ	○	○	91
REAR WHEEL [TRAR] ﾘﾔｰﾎｲｰﾙ	○	○	92
POWER CYLINDER ﾊﾟﾜｰｼﾘﾝﾀﾞ	○	○	93
OVERHEAD GUARD ｵｰﾊﾞﾍｯﾄﾞｶﾞｰﾄﾞ	○	○	94
FRONT LAMP BRACKET ﾌﾛﾝﾄﾗﾝﾌﾟﾌﾞﾗｹｯﾄ	○	○	95
FRONT LAMP BRACKET [HL][BKH] ﾌﾛﾝﾄﾗﾝﾌﾟﾌﾞﾗｹｯﾄ	○	○	96
REAR LAMP COVER ﾘﾔｰﾗﾝﾌﾟｶﾊﾞｰ	○	○	97
REAR LAMP COVER [RRE] ﾘﾔｰﾗﾝﾌﾟｶﾊﾞｰ	○	○	98
HEAD GUARD PARTS ﾍｯﾄﾞｶﾞｰﾄﾞﾊﾟｰﾂ	○	○	99
ACCEL PEDAL ｱｸｾﾙﾍﾟﾀﾞﾙ	○	○	100
FOOT PEDAL (CLUTCH) ﾌｯﾄﾍﾟﾀﾞﾙ	○		101
FOOT PEDAL (TOR-CON) ﾌｯﾄﾍﾟﾀﾞﾙ		○	102
FOOT PEDAL CYLINDER (CLUTCH) ﾌｯﾄﾍﾟﾀﾞﾙｼﾘﾝﾀﾞ	○		103
FOOT PEDAL CYLINDER (TOR-CON) ﾌｯﾄﾍﾟﾀﾞﾙｼﾘﾝﾀﾞ		○	104
BRAKE PIPE (CLUTCH) ﾌﾞﾚｰｷﾊﾟｲﾌﾟ	○		105

CONTENTS　目次

a	FD30C3Z
b	FD30T3Z

CHASSIS ｼｬｰｼ

SECTION　部門	a	b	FIG.NO.
BRAKE PIPE (TOR-CON) ﾌﾞﾚｰｷﾊﾟｲﾌﾟ		○	106
FOOT PEDAL PARTS ﾌｯﾄﾍﾟﾀﾞﾙﾊﾟｰﾂ	○	○	107
CLUTCH MASTER CYLINDER (CLUTCH) ｸﾗｯﾁﾏｽﾀｼﾘﾝﾀﾞ	○		108
BRAKE MASTER CYLINDER ﾌﾞﾚｰｷﾏｽﾀｼﾘﾝﾀﾞ	○	○	109
CLUTCH RELEASE CYLINDER (CLUTCH) ｸﾗｯﾁﾘﾘｰｽｼﾘﾝﾀﾞ	○		110
BRAKE LEVER ﾌﾞﾚｰｷﾚﾊﾞｰ	○	○	111
FRAME ﾌﾚｰﾑ	○	○	112
OIL TANK ｵｲﾙﾀﾝｸ	○	○	113
OIL CAP & LEVEL ｵｲﾙｷｬｯﾌﾟ&ﾚﾍﾞﾙ	○	○	114
FUEL TANK ﾌｭｰｴﾙﾀﾝｸ	○	○	115
BALANCE WEIGHT ﾊﾞﾗﾝｽｳｴｲﾄ	○	○	116
BALANCE WEIGHT [HC] ﾊﾞﾗﾝｽｳｴｲﾄ	○	○	117
FRONT GUARD ﾌﾛﾝﾄｶﾞｰﾄﾞ	○	○	118
BONNET ﾎﾞﾝﾈｯﾄ	○	○	119
RADIATOR COVER ﾗｼﾞｴｰﾀｶﾊﾞｰ	○	○	120
BONNET HINGE ﾎﾞﾝﾈｯﾄﾋﾝｼﾞ	○	○	121
FLOOR BOARD ﾌﾛｱﾎﾞｰﾄﾞ	○	○	122
STEP & FLOOR MAT ｽﾃｯﾌﾟ&ﾌﾛｱﾏｯﾄ	○	○	123
FRONT COVER (CLUTCH) ﾌﾛﾝﾄｶﾊﾞｰ	○		124
FRONT COVER (TOR-CON) ﾌﾛﾝﾄｶﾊﾞｰ		○	125
SIDE COVER ｻｲﾄﾞｶﾊﾞｰ	○	○	126

CONTENTS　目次

a	FD30C3Z
b	FD30T3Z

CHASSIS ｼｬｰｼ

SECTION　部門	a	b	FIG.NO.
SIDE COVER [SCB001][SCBCR] ｻｲﾄﾞｶﾊﾞｰ	○	○	127
FRONT SIDE COVER ﾌﾛﾝﾄｻｲﾄﾞｶﾊﾞｰ	○	○	128
SEAT ｼｰﾄ	○	○	129
SEAT [HGL] ｼｰﾄ	○	○	130
PUMP UNIT ﾎﾟﾝﾌﾟﾕﾆｯﾄ	○	○	131
CONTROL VALVE [2SV] ｺﾝﾄﾛｰﾙﾊﾞﾙﾌﾞ	○	○	132
CONTROL VALVE [3SV] ｺﾝﾄﾛｰﾙﾊﾞﾙﾌﾞ	○	○	133
CONTROL VALVE [4SV] ｺﾝﾄﾛｰﾙﾊﾞﾙﾌﾞ	○	○	134
CONTROL VALVE [5SV] ｺﾝﾄﾛｰﾙﾊﾞﾙﾌﾞ	○	○	135
CONTROL VALVE FITTING ｺﾝﾄﾛｰﾙﾊﾞﾙﾌﾞﾌｨｯﾃｨﾝｸﾞ	○	○	136
VALVE CONTROL [2SV] ﾊﾞﾙﾌﾞｺﾝﾄﾛｰﾙ	○	○	137
VALVE CONTROL [3SV] ﾊﾞﾙﾌﾞｺﾝﾄﾛｰﾙ	○	○	138
VALVE CONTROL [4SV] ﾊﾞﾙﾌﾞｺﾝﾄﾛｰﾙ	○	○	139
VALVE CONTROL [5SV] ﾊﾞﾙﾌﾞｺﾝﾄﾛｰﾙ	○	○	140
VALVE CONTROL KNOB ﾊﾞﾙﾌﾞｺﾝﾄﾛｰﾙﾉﾌﾞ	○	○	141
HYDRAULIC LINE (MAIN)(1/4) ﾊｲﾄﾞﾛﾘｯｸﾗｲﾝ(ﾒｲﾝ)(1/4)	○	○	142
HYDRAULIC LINE (MAIN)(2/4) ﾊｲﾄﾞﾛﾘｯｸﾗｲﾝ(ﾒｲﾝ)(2/4)	○	○	143
HYDRAULIC LINE (MAIN)(3/4) ﾊｲﾄﾞﾛﾘｯｸﾗｲﾝ(ﾒｲﾝ)(3/4)	○	○	144
HYDRAULIC LINE (MAIN)(4/4) ﾊｲﾄﾞﾛﾘｯｸﾗｲﾝ(ﾒｲﾝ)(4/4)	○	○	145
HYDRAULIC LINE (TOR-CON) ﾊｲﾄﾞﾛﾘｯｸﾗｲﾝ(ﾄﾙｺﾝ)		○	146
TILT CYLINDER ﾃｨﾙﾄｼﾘﾝﾀﾞ	○	○	147

CONTENTS　目次

CHASSIS ｼｬｰｼ

a	FD30C3Z
b	FD30T3Z

SECTION　部門	a	b	FIG.NO.
TILT BOOT [TLB][FC] ﾃｨﾙﾄﾌﾞｰﾂ	○	○	148
DECAL (1/2) ﾃﾞｶﾙ(1/2)	○	○	149
DECAL (2/2) ﾃﾞｶﾙ(2/2)	○	○	150
DECAL (2/2)[EXB] ﾃﾞｶﾙ(2/2)	○	○	151
SERVICE TOOL ｻｰﾋﾞｽﾂｰﾙ	○	○	152

CONTENTS　目次

a	FD30C3Z
b	FD30T3Z

MAST ﾏｽﾄ

SECTION　部門	a	b	FIG.NO.
[VM2N9]			
FORK [VM2N9] ﾌｫｰｸ	○	○	153
LIFT BRACKET [VM2N9] ﾘﾌﾄﾌﾞﾗｹｯﾄ	○	○	154
BACKREST [VM2N9] ﾊﾞｯｸﾚｽﾄ	○	○	155
MAST [VM2N9] ﾏｽﾄ	○	○	156
LIFT CYLINDER [VM2N9] ﾘﾌﾄｼﾘﾝﾀﾞ	○	○	157
MAST PIPING [VM2N9] ﾏｽﾄﾊﾟｲﾋﾟﾝｸﾞ	○	○	158
[VFM2N9]			
FORK [VFM2N9] ﾌｫｰｸ	○	○	159
LIFT BRACKET [VFM2N9] ﾘﾌﾄﾌﾞﾗｹｯﾄ	○	○	160
BACKREST [VFM2N9] ﾊﾞｯｸﾚｽﾄ	○	○	161
MAST [VFM2N9] ﾏｽﾄ	○	○	162
TILT GAUGE [VFM2N9/(TG,PPC,PR,PRC,MPC)] ﾃｨﾙﾄｹﾞｰｼﾞ	○	○	163
LIFT CYLINDER (FRONT) [VFM2N9] ﾘﾌﾄｼﾘﾝﾀﾞ(ﾌﾛﾝﾄ)	○	○	164
LIFT CYLINDER (REAR) [VFM2N9] ﾘﾌﾄｼﾘﾝﾀﾞ(ﾘﾔｰ)	○	○	165
MAST PIPING [VFM2N9] ﾏｽﾄﾊﾟｲﾋﾟﾝｸﾞ	○	○	166

CONTENTS　目次

MAST ﾏｽﾄ

a	FD30C3Z
b	FD30T3Z

SECTION　部門	a	b	FIG.NO.
[VFHM2N9]			
FORK [VFHM2N9] ﾌｫｰｸ	○	○	167
LIFT BRACKET [VFHM2N9] ﾘﾌﾄﾌﾞﾗｹｯﾄ	○	○	168
BACKREST [VFHM2N9] ﾊﾞｯｸﾚｽﾄ	○	○	169
MAST [VFHM2N9] ﾏｽﾄ	○	○	170
TILT GAUGE [VFHM2N9/(TG,PPC,PR,PRC,MPC)] ﾃｨﾙﾄｹﾞｰｼﾞ	○	○	171
LIFT CYLINDER (FRONT)[VFHM2N9] ﾘﾌﾄｼﾘﾝﾀﾞ(ﾌﾛﾝﾄ)	○	○	172
LIFT CYLINDER (REAR)[VFHM2N9] ﾘﾌﾄｼﾘﾝﾀﾞ(ﾘﾔｰ)	○	○	173
MAST PIPING [VFHM2N9] ﾏｽﾄﾊﾟｲﾋﾟﾝｸﾞ	○	○	174
[VFHM2N8]			
FORK [VFHM2N8] ﾌｫｰｸ	○	○	175
LIFT BRACKET [VFHM2N8] ﾘﾌﾄﾌﾞﾗｹｯﾄ	○	○	176
BACKREST [VFHM2N8] ﾊﾞｯｸﾚｽﾄ	○	○	177
MAST [VFHM2N8] ﾏｽﾄ	○	○	178
LIFT CYLINDER(FRONT) [VFHM2N8] ﾘﾌﾄｼﾘﾝﾀﾞ(ﾌﾛﾝﾄ)	○	○	179
LIFT CYLINDER (REAR) [VFHM2N8] ﾘﾌﾄｼﾘﾝﾀﾞ(ﾘﾔｰ)	○	○	180
MAST PIPING [VFHM2N8] ﾏｽﾄﾊﾟｲﾋﾟﾝｸﾞ	○	○	181

M E M O

FIG.1 ENGINE MOUNT

(F7Z31020) エンジンマウント

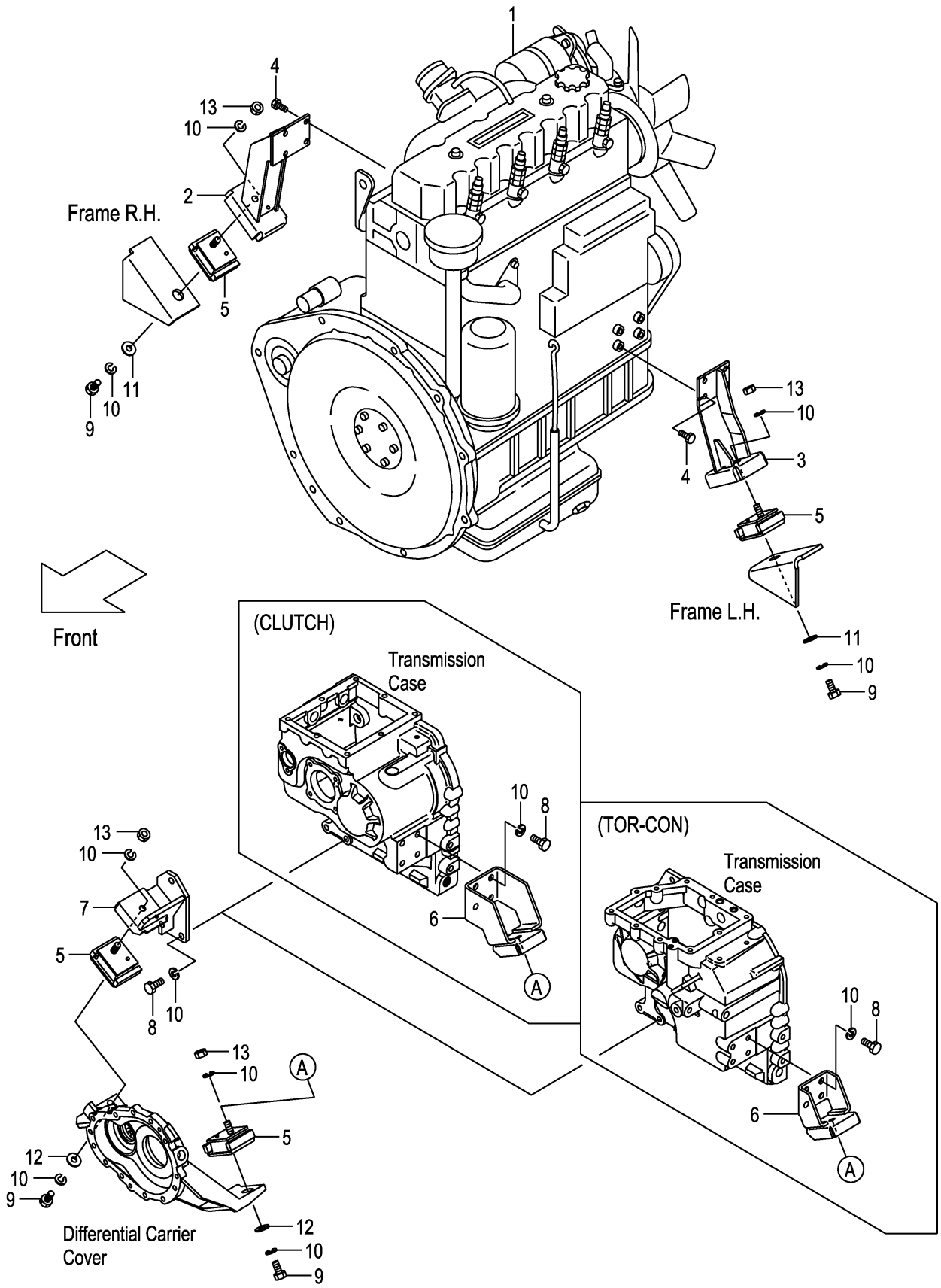

FIG.1

A:FD30C3Z
B:FD30T3Z

(F7Z31020)

Item No	Part No.	Mark	Description		Req'd	Remarks : Serial No.
1	22U51-00101		ENGINE,C240	ｴﾝｼﾞﾝ	1	
2	22U51-00201		BRACKET,ENGINE,RH	ﾌﾞﾗｹｯﾄ	1	
3	22U51-00211		BRACKET,ENGINE,LH	ﾌﾞﾗｹｯﾄ	1	
4	01217-10030		BOLT	ﾎﾞﾙﾄ	8	
5	22N51-00161		RUBBER,CUSHION	ﾗﾊﾞｰ	4	
6	22N41-00201		BRACKET,FRONT,LH	ﾌﾞﾗｹｯﾄ	1	A
-	22N51-00201		BRACKET,FRONT,LH	ﾌﾞﾗｹｯﾄ	1	B
7	22N51-00211		BRACKET,FRONT,RH	ﾌﾞﾗｹｯﾄ	1	
8	01103-12030		BOLT	ﾎﾞﾙﾄ	7	
9	01103-12025		BOLT	ﾎﾞﾙﾄ	4	
10	02011-00012		WASHER	ﾜｯｼｬ	15	
11	256C6-32011		WASHER	ﾜｯｼｬ	2	
12	256C9-52372		WASHER	ﾜｯｼｬ	2	
13	01400-00012		NUT	ﾅｯﾄ	4	

FIG.2 AIR CLEANER

(F7Z31040) エアークリーナ

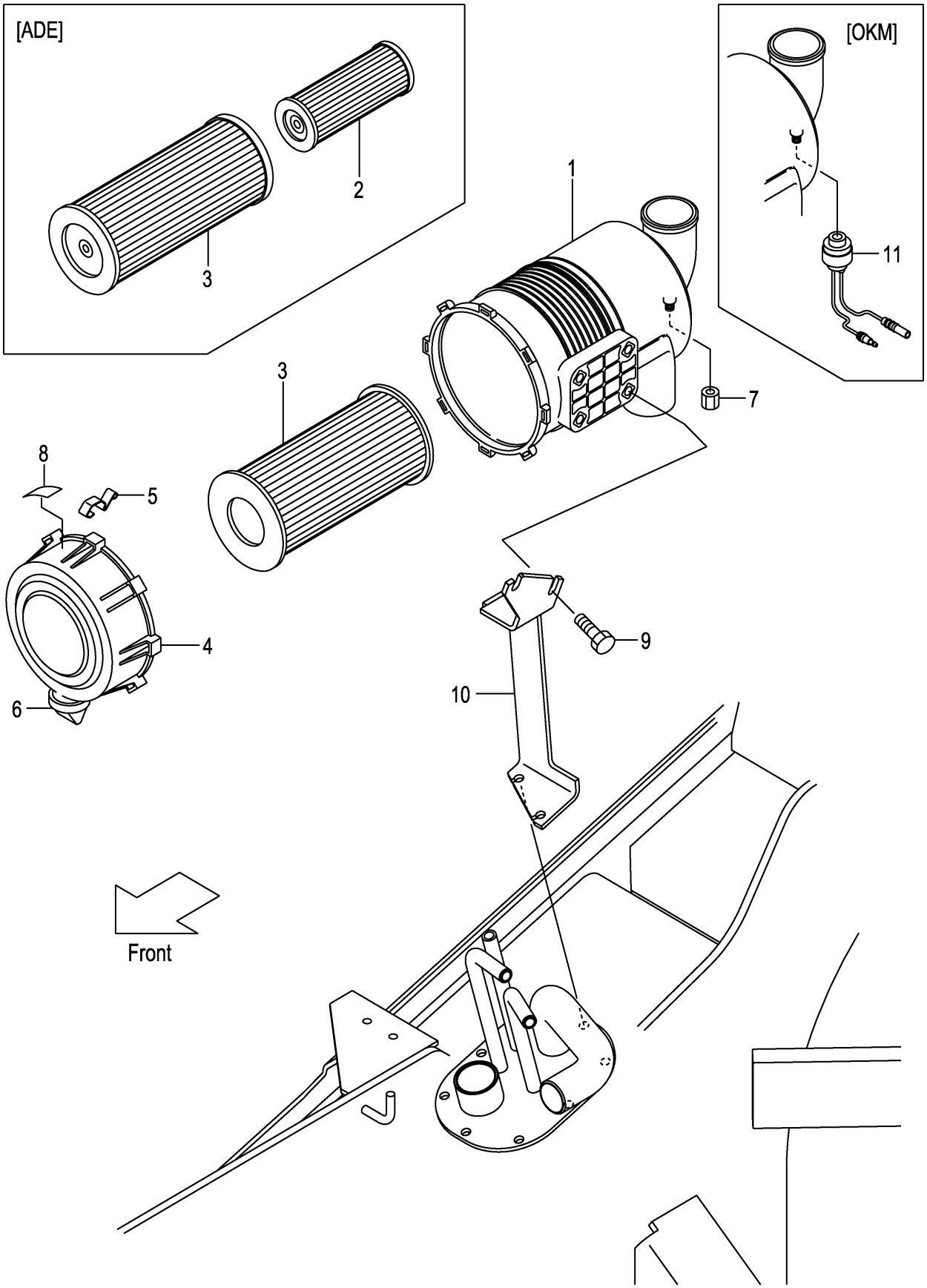

FIG.2

(F7Z31040)

A:FD30C3Z FD30T3Z

Item No	Part No.	Mark	Description		Req'd	Remarks : Serial No.
A1	216G1-02451		CLEANER-ASSY,AIR	ｴｱｰｸﾘｰﾅｱｯｾﾝ	1	INC.1,3-8
-	516G0-60101		CLEANER-ASSY,AIR	ｴｱｰｸﾘｰﾅｱｯｾﾝ	1	[ADE] INC.1-8
1	216G1-02481		BODY	ﾎﾞﾃﾞｨ	1	
2	213T1-02021		ELEMENT,INNER	ｴﾚﾒﾝﾄ	1	[ADE]
3	256C1-08011		ELEMENT,OUTER	ｴﾚﾒﾝﾄ	1	
-	213T1-02011		ELEMENT,OUTER	ｴﾚﾒﾝﾄ	1	[ADE]
4	216G1-02461		COVER	ｶﾊﾞｰ	1	
5	216G1-02471		LATCH	ﾗｯﾁ	3	
6	216G1-02491		VALVE,VACUATOR	ﾊﾞﾙﾌﾞ	1	
7	53651-12551		CAP,NIPPLE	ｷｬｯﾌﾟ	1	
8	216G1-02501		LABEL	ﾗﾍﾞﾙ	1	
-	516G0-62011		LABEL	ﾗﾍﾞﾙ	1	[ADE]
9	01183-08016		BOLT	ﾎﾞﾙﾄ	2	
10	22U51-00301		BRACKET,AIR-CLEANER	ﾌﾞﾗｹｯﾄ	1	
11	522A1-10201		SENSOR,762MM	ｾﾝｻ	1	[OKM]

FIG.3 AIR DUCT

(F7Z31060) エアーダクト

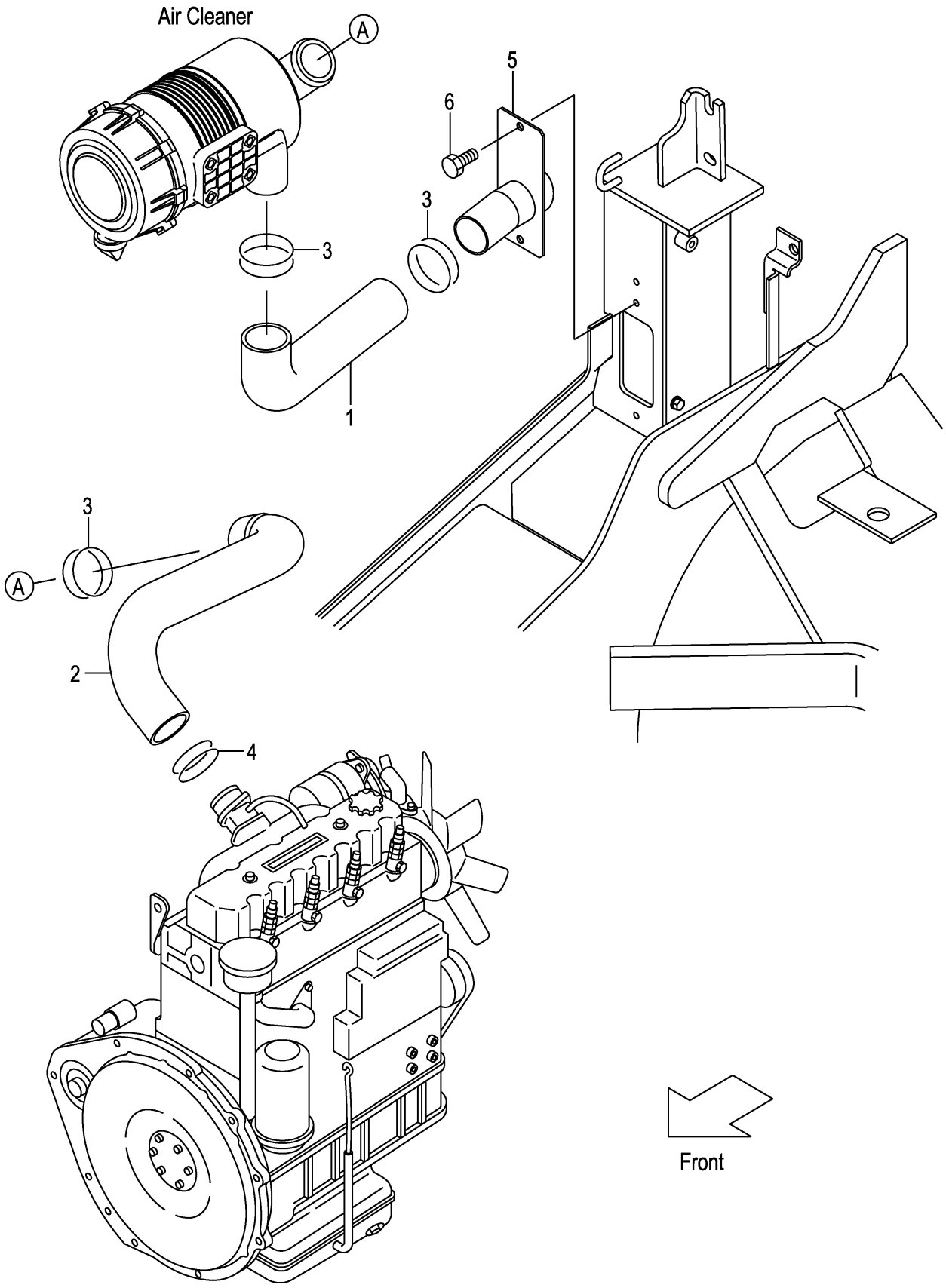

FIG.3

(F7Z31060)

A:FD30C3Z FD30T3Z

Item No	Part No.	Mark	Description		Req'd	Remarks : Serial No.
1	22B51-02201		HOSE,AIR-DUCT	ﾎｰｽ	1	
2	217M1-02001		HOSE,AIR-INTAKE	ﾎｰｽ	1	
3	04911-00060		CLIP	ｸﾘｯﾌﾟ	3	
4	04911-00065		CLIP	ｸﾘｯﾌﾟ	1	
5	22U51-02601		PIPE,DUCT	ﾊﾟｲﾌﾟ	1	
6	01185-08016		BOLT	ﾎﾞﾙﾄ	2	

FIG.4 COOLING UNIT (CLUTCH)

(F7Z32110) クーリング゛ユニット

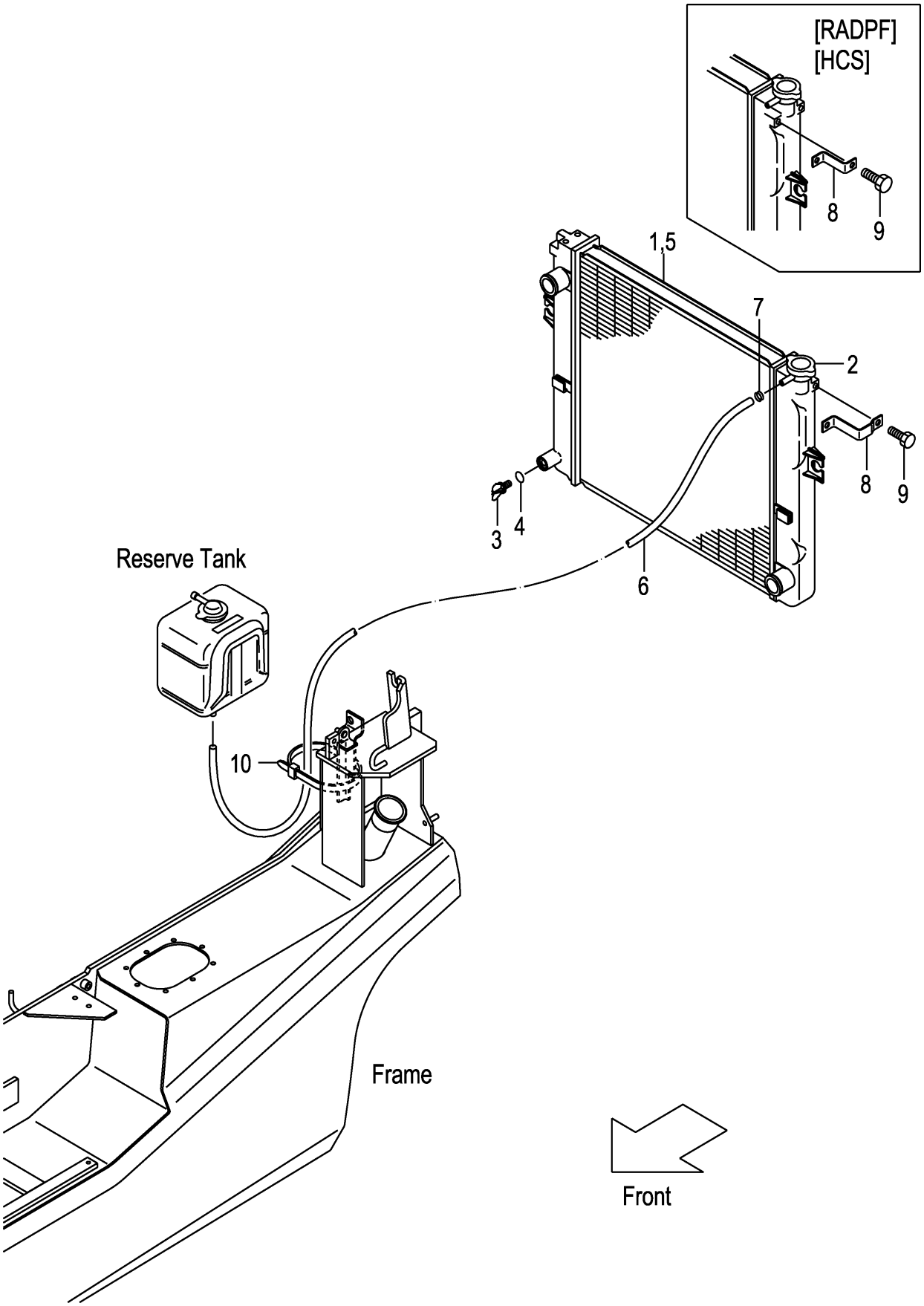

FIG.4

(F7Z32110)

A:FD30C3Z

Item No	Part No.	Mark	Description		Req'd	Remarks : Serial No.
A1	239A2-10102		RADIATOR-ASSY	ﾗｼﾞｴｰﾀｱｯｾﾝ	1	INC.1-7
-	539A6-60302		RADIATOR-ASSY	ﾗｼﾞｴｰﾀｱｯｾﾝ	1	[RADPF][HCS] INC.1-7
1	NO PART NO.	#	RADIATOR	ﾗｼﾞｴｰﾀ	1	
-	NO PART NO.	#	RADIATOR	ﾗｼﾞｴｰﾀ	1	[RADPF][HCS]
2	222A2-10211		CAP	ｷｬｯﾌﾟ	1	
3	234A2-12201		COCK	ｺｯｸ	1	
4	234A2-12211		O-RING	Oﾘﾝｸﾞ	1	
5	NO PART NO.	#	NUT	ﾅｯﾄ	3	
-	NO PART NO.	#	NUT	ﾅｯﾄ	4	[RADPF][HCS]
6	NO PART NO.		HOSE	ﾎｰｽ	1	
7	23772-12071		CLIP	ｸﾘｯﾌﾟ	1	
8	239A2-12141		BRACKET	ﾌﾞﾗｹｯﾄ	1	
-	239B2-12141		BRACKET	ﾌﾞﾗｹｯﾄ	1	[RADPF][HCS]
9	01185-08016		BOLT	ﾎﾞﾙﾄ	1	
10	29590-64501		BAND	ﾊﾞﾝﾄﾞ	1	110-

FIG.5 COOLING UNIT (TOR-CON)

(F7Z32120) クーリング゛ユニット

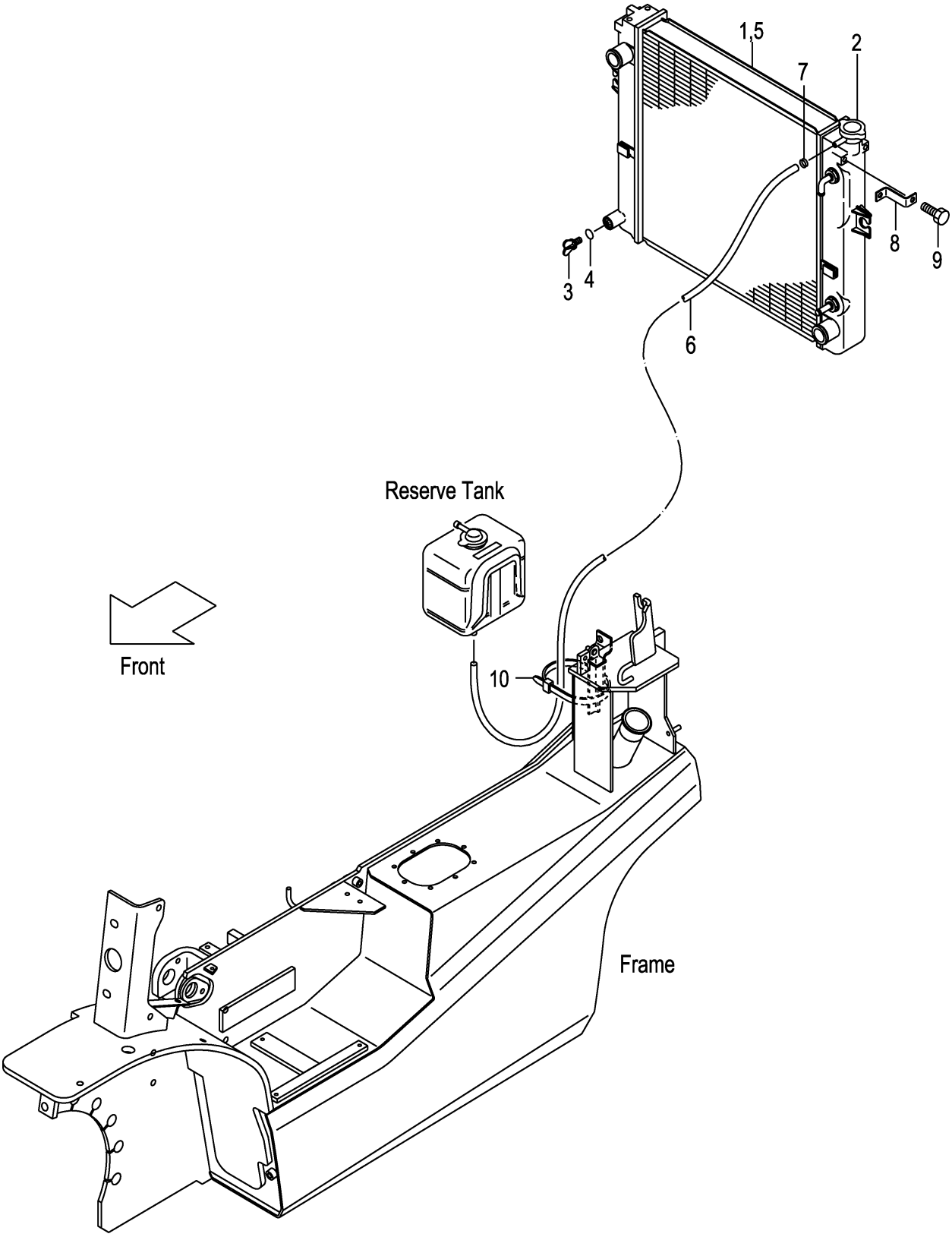

FIG.5

(F7Z32120)

A:FD30T3Z

Item No	Part No.	Mark	Description		Req'd	Remarks : Serial No.
A1	239B2-10102		RADIATOR-ASSY	ﾗｼﾞｴｰﾀｱｯｾﾝ	1	INC.1-7
-	538B6-60302		RADIATOR-ASSY	ﾗｼﾞｴｰﾀｱｯｾﾝ	1	[RADPF][HCS] INC.1-7
1	NO PART NO.	#	RADIATOR	ﾗｼﾞｴｰﾀ	1	
-	NO PART NO.	#	RADIATOR	ﾗｼﾞｴｰﾀ	1	[RADPF][HCS]
2	222A2-10211		CAP	ｷｬｯﾌﾟ	1	
3	234A2-12201		COCK	ｺｯｸ	1	
4	234A2-12211		O-RING	Oﾘﾝｸﾞ	1	
5	NO PART NO.	#	NUT	ﾅｯﾄ	4	
6	NO PART NO.		HOSE	ﾎｰｽ	1	
7	23772-12071		CLIP	ｸﾘｯﾌﾟ	1	
8	239B2-12141		BRACKET	ﾌﾞﾗｹｯﾄ	1	
9	01185-08016		BOLT	ﾎﾞﾙﾄ	1	
10	29590-64501		BAND	ﾊﾞﾝﾄﾞ	1	110-

FIG.6 FAN SHROUD

(F7Z32140) ﾌｧﾝｼｭﾗｳﾄﾞ

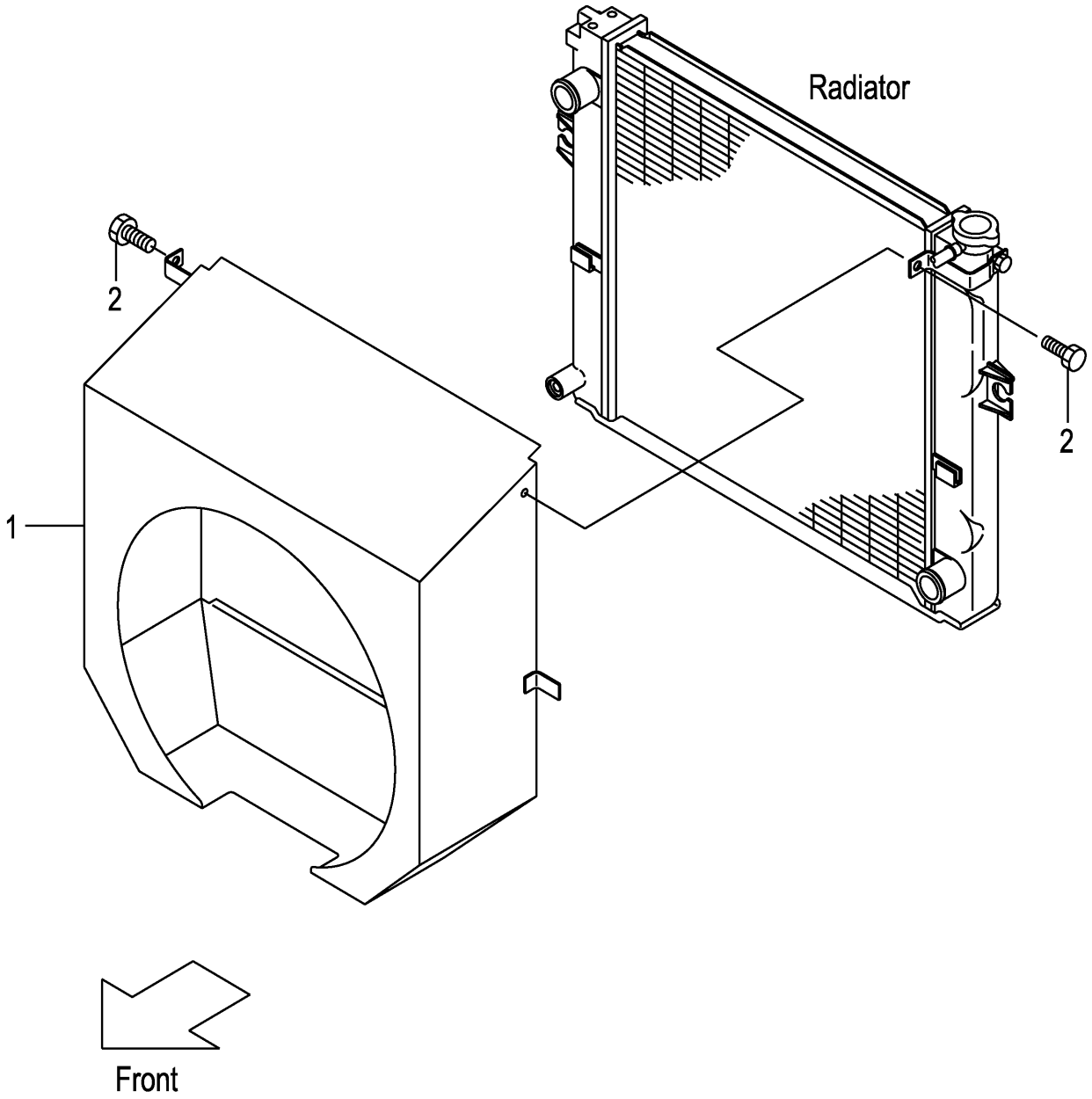

FIG.6

(F7Z32140)

A:FD30C3Z FD30T3Z

Item No	Part No.	Mark	Description		Req'd	Remarks : Serial No.
1	22U52-12201		SHROUD,FAN	ｼｭﾗｳﾄﾞ	1	
-	52U56-52001		SHROUD,FAN	ｼｭﾗｳﾄﾞ	1	[DSR006][DSR008]
2	01185-08016		BOLT	ﾎﾞﾙﾄ	2	

FIG.7 RADIATOR PARTS & RESERVE TANK

(F7Z32150) ﾗｼﾞｴｰﾀﾊﾟｰﾂ&ﾘｻﾞｰﾌﾞﾀﾝｸ

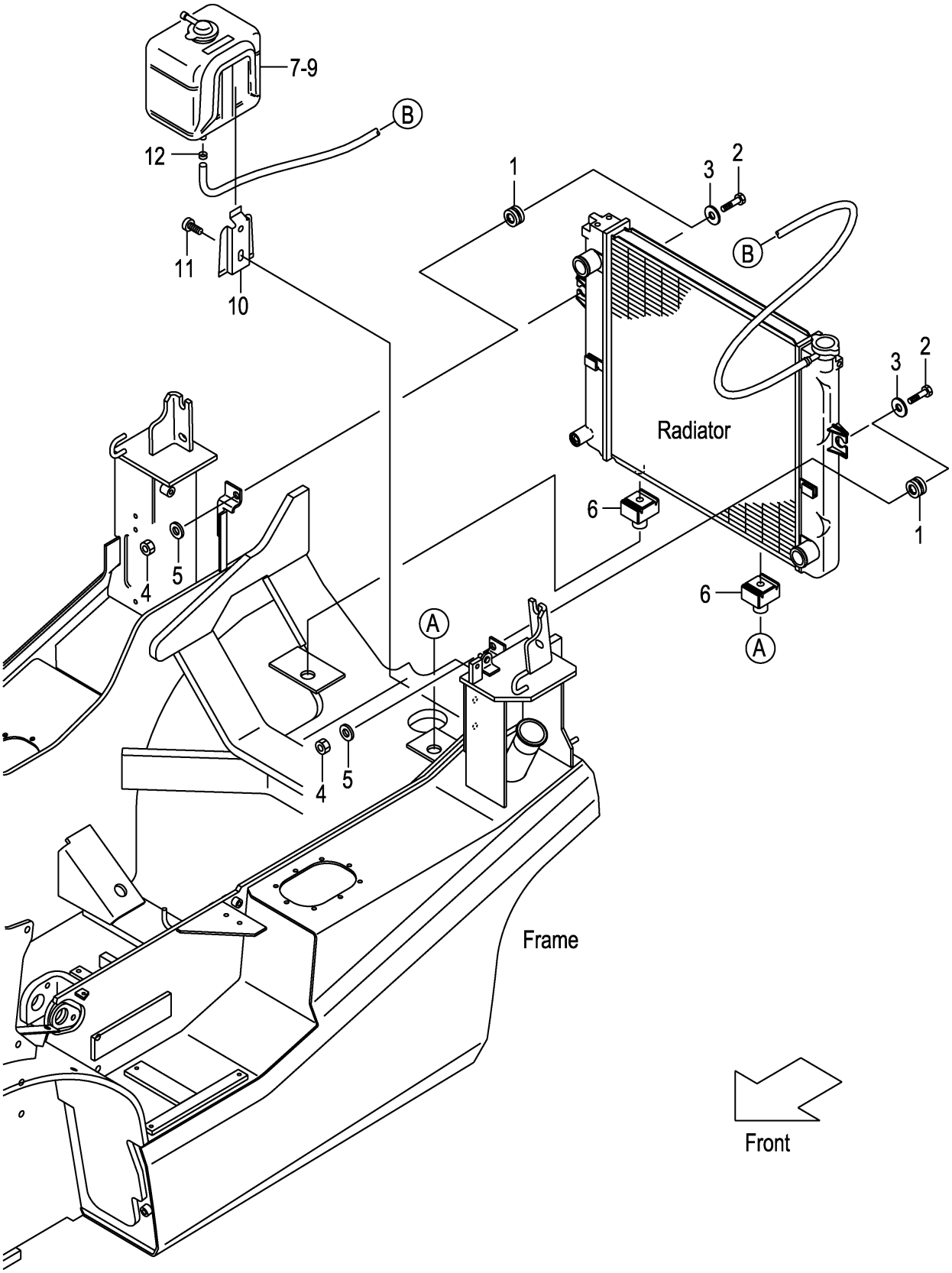

FIG.7

(F7Z32150)

A:FD30C3Z FD30T3Z

Item No	Part No.	Mark	Description		Req'd	Remarks : Serial No.
1	214A2-12001		RUBBER	ﾗﾊﾞｰ	2	
2	214A2-12021		BOLT	ﾎﾞﾙﾄ	2	
3	22252-32251		WASHER	ﾜｯｼｬ	2	
4	23652-12051		NUT	ﾅｯﾄ	2	
5	02000-00010		WASHER	ﾜｯｼｬ	2	
6	239A2-12021		RUBBER	ﾗﾊﾞｰ	2	
7	214A2-12111		TANK,RESERVE	ﾀﾝｸ	1	INC.8,9
-	214A2-12121		TANK,RESERVE	ﾀﾝｸ	1	[OKM] INC.8,9
8	214A2-13001		CAP	ｷｬｯﾌﾟ	1	
9	214A2-13011		PACKING	ﾊﾟｯｷﾝｸﾞ	1	
10	214A2-12141		BRACKET	ﾌﾞﾗｹｯﾄ	1	
11	214A2-42611		SCREW	ｽｸﾘｭ	2	
12	214A2-12201		CLIP	ｸﾘｯﾌﾟ	1	

FIG.8 RADIATOR HOSE

(F7Z32170) ﾗｼﾞｴｰﾀﾎｰｽ

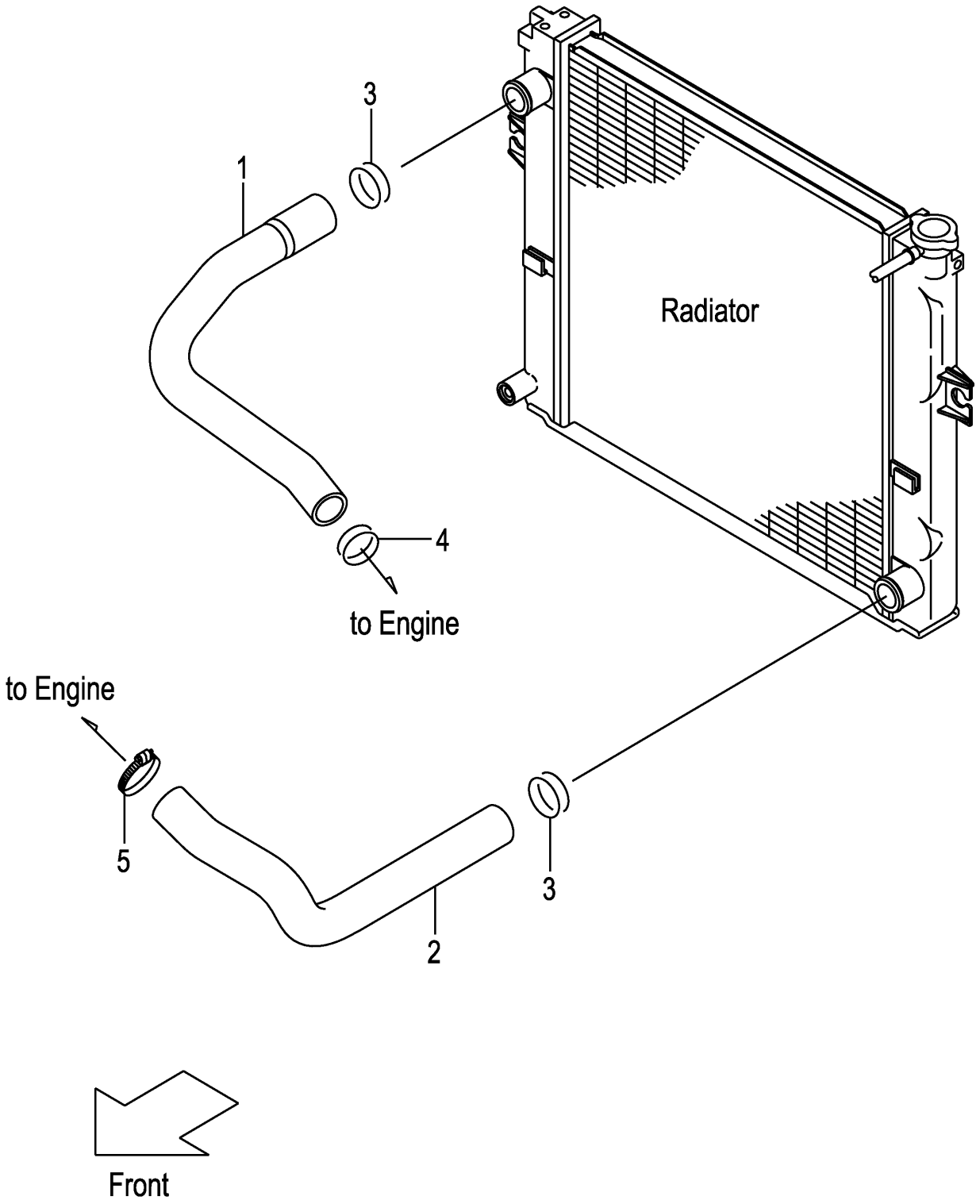

FIG.8

(F7Z32170)

A:FD30C3Z FD30T3Z

Item No	Part No.	Mark	Description		Req'd	Remarks : Serial No.
1	22U52-12001		HOSE,UPPER	ﾎｰｽ	1	
2	22U52-12011		HOSE,LOWER	ﾎｰｽ	1	
3	04911-00044		CLIP	ｸﾘｯﾌﾟ	2	
4	04911-00040		CLIP	ｸﾘｯﾌﾟ	1	
5	217M2-12221		CLAMP,HOSE	ｸﾗﾝﾌﾟ	1	

FIG.9 DUST SCREEN [DSR006][DSR008]

(F7Z32180) ﾀﾞｽﾄｽｸﾘｰﾝ

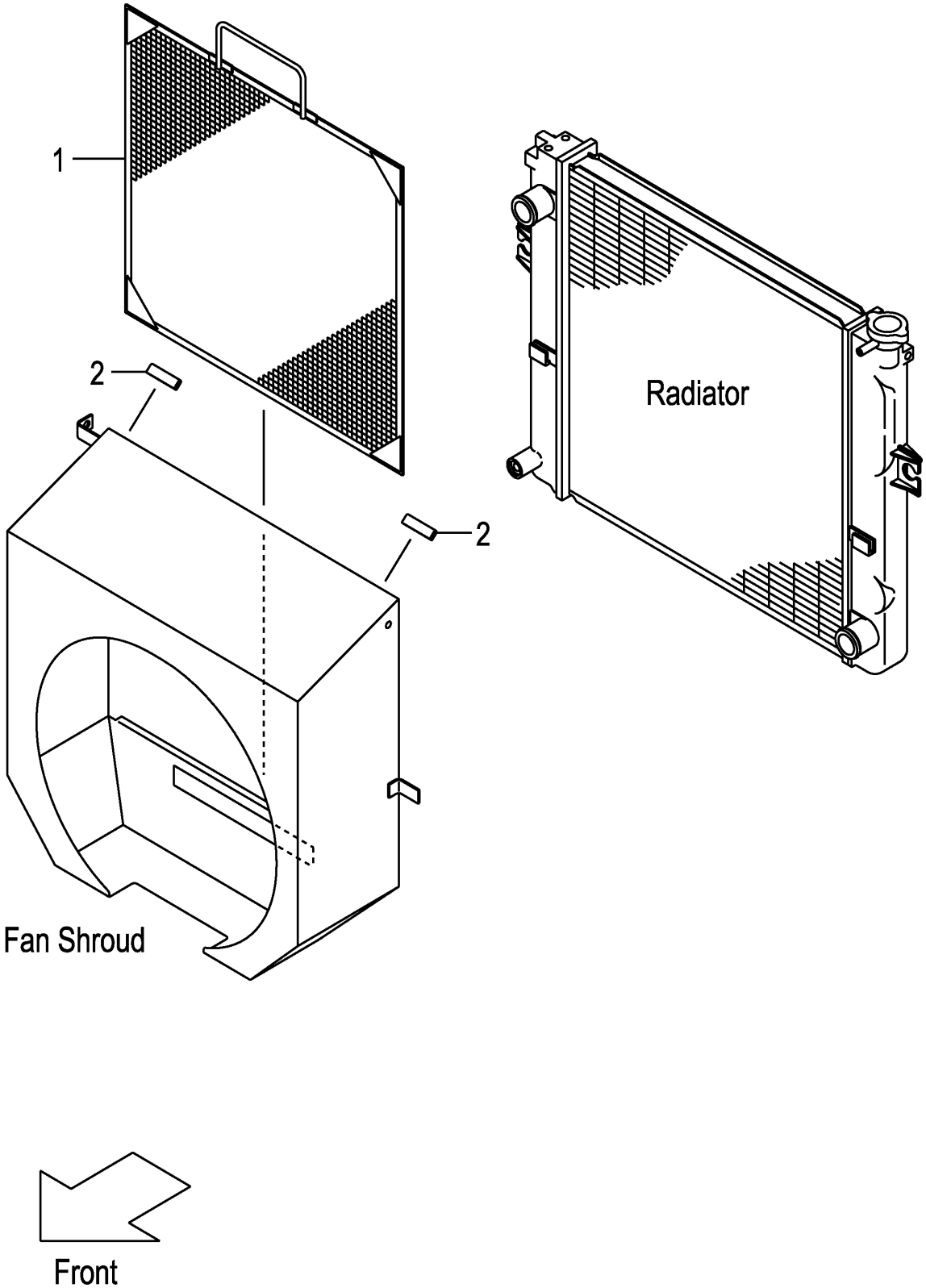

FIG.9

(F7Z32180)

A:FD30C3Z FD30T3Z

Item No	Part No.	Mark	Description		Req'd	Remarks : Serial No.
1	539A6-52051		SCREEN,DUST	ｽｸﾘｰﾝ	1	[DSR006]
-	539A6-52151		SCREEN,DUST	ｽｸﾘｰﾝ	1	[DSR008]
2	209P6-42831		EDGING	ｴｯｼﾞﾝｸﾞ	2	[DSR006][DSR008]

FIG.10 FUEL SYSTEM

(F7Z32220) フューエルシステム

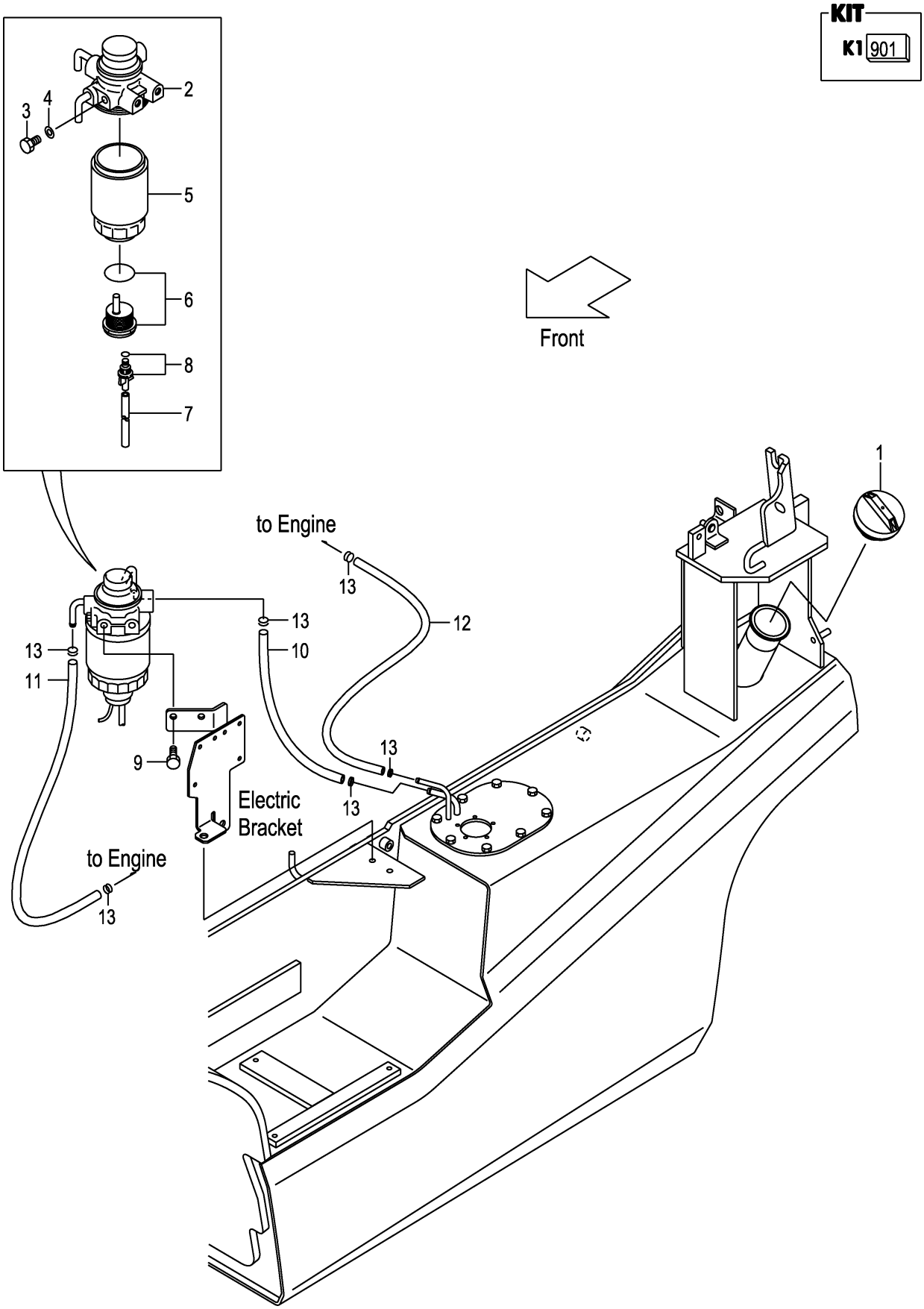

FIG.10

(F7Z32220)

A:FD30C3Z FD30T3Z

Item No	Part No.	Mark	Description		Req'd	Remarks : Serial No.
1	216G2-22051		CAP,FUEL	ｷｬｯﾌﾟ	1	
A1	24662-22032		FILTER-ASSY,FUEL	ﾌｭｰｴﾙﾌｨﾙﾀｱｯｾﾝ	1	INC.2-8
901	Z-8-94367-294-0	K1	KIT,SENSOR	ｾﾝｻｷｯﾄ	1	INC.6-8
2	NO PART NO.	#	BODY	ﾎﾞﾃﾞｨ	1	
3	Z-8-94132-674-0		PLUG	ﾌﾟﾗｸﾞ	1	
4	Z-8-94132-675-0		GASKET	ｶﾞｽｹｯﾄ	1	
5	20801-02141		CARTRIDGE	ｶｰﾄﾘｯｼﾞ	1	
6	NO PART NO.	#*	SENSOR	ｾﾝｻ	1	
7	Z-8-94367-956-0	*	HOSE	ﾎｰｽ	1	
8	Z-8-94367-957-0	*	PLUG	ﾌﾟﾗｸﾞ	1	
9	01183-08016		BOLT	ﾎﾞﾙﾄ	2	
10	24662-22131		HOSE,FUEL,7.5X270	ﾎｰｽ	1	
11	214A2-22071		HOSE,FUEL,7.5X550	ﾎｰｽ	1	
12	23322-22011		HOSE,FUEL,6.5X330	ﾎｰｽ	1	
13	22192-22091		CLIP	ｸﾘｯﾌﾟ	6	

FIG.11 EXHAUST SYSTEM

(F7Z32310) エキゾーストシステム

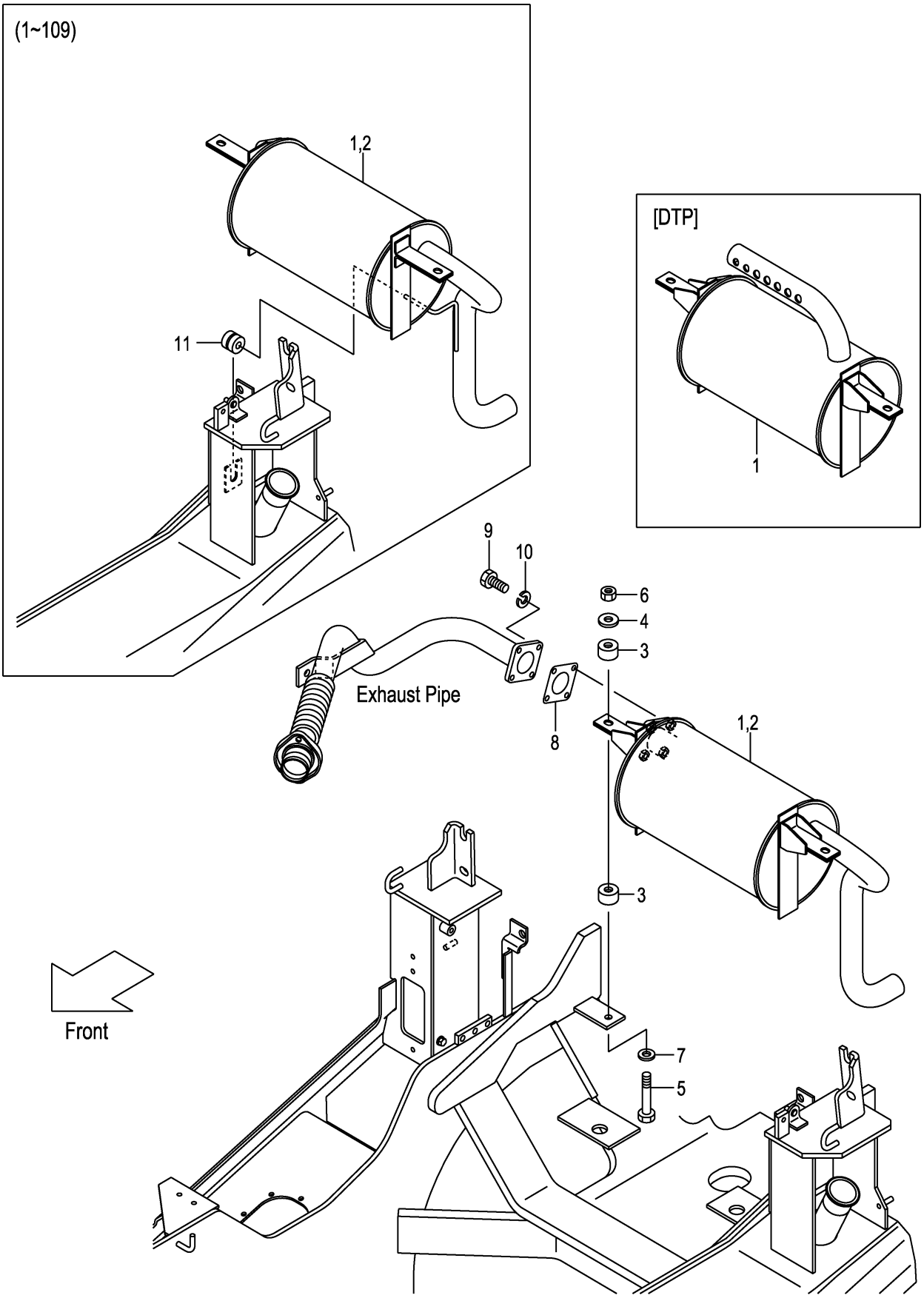

FIG.11

(F7Z32310)

A:FD30C3Z FD30T3Z

Item No	Part No.	Mark	Description		Req'd	Remarks : Serial No.
1	22N92-30101		MUFFLER,3T	ﾏﾌﾗ	1	
-	52N91-70101		MUFFLER,3T	ﾏﾌﾗ	1	[EPM] INC.2
-	52N91-70201		MUFFLER,3T	ﾏﾌﾗ	1	[CBM]
-	52N51-70301		MUFFLER	ﾏﾌﾗ	1	[DTP]
2	532A1-70201		CATALYST	ｷｬﾀﾘｽﾄ	1	[EPM]
3	22252-32241		RUBBER,CUSHION	ﾗﾊﾞｰ	4	
4	22252-32251		WASHER	ﾜｯｼｬ	2	
5	21232-32551		BOLT	ﾎﾞﾙﾄ	2	
6	23652-12051		NUT	ﾅｯﾄ	2	
7	02000-00010		WASHER	ﾜｯｼｬ	2	
8	217G2-32001		GASKET	ｶﾞｽｹｯﾄ	1	
9	01100-08030		BOLT	ﾎﾞﾙﾄ	4	
10	02010-00008		WASHER	ﾜｯｼｬ	4	
11	214A2-12001		RUBBER	ﾗﾊﾞｰ	1	1-109

FIG.12 EXHAUST SYSTEM [TUE]

(F7Z32330) エキゾーストシステム

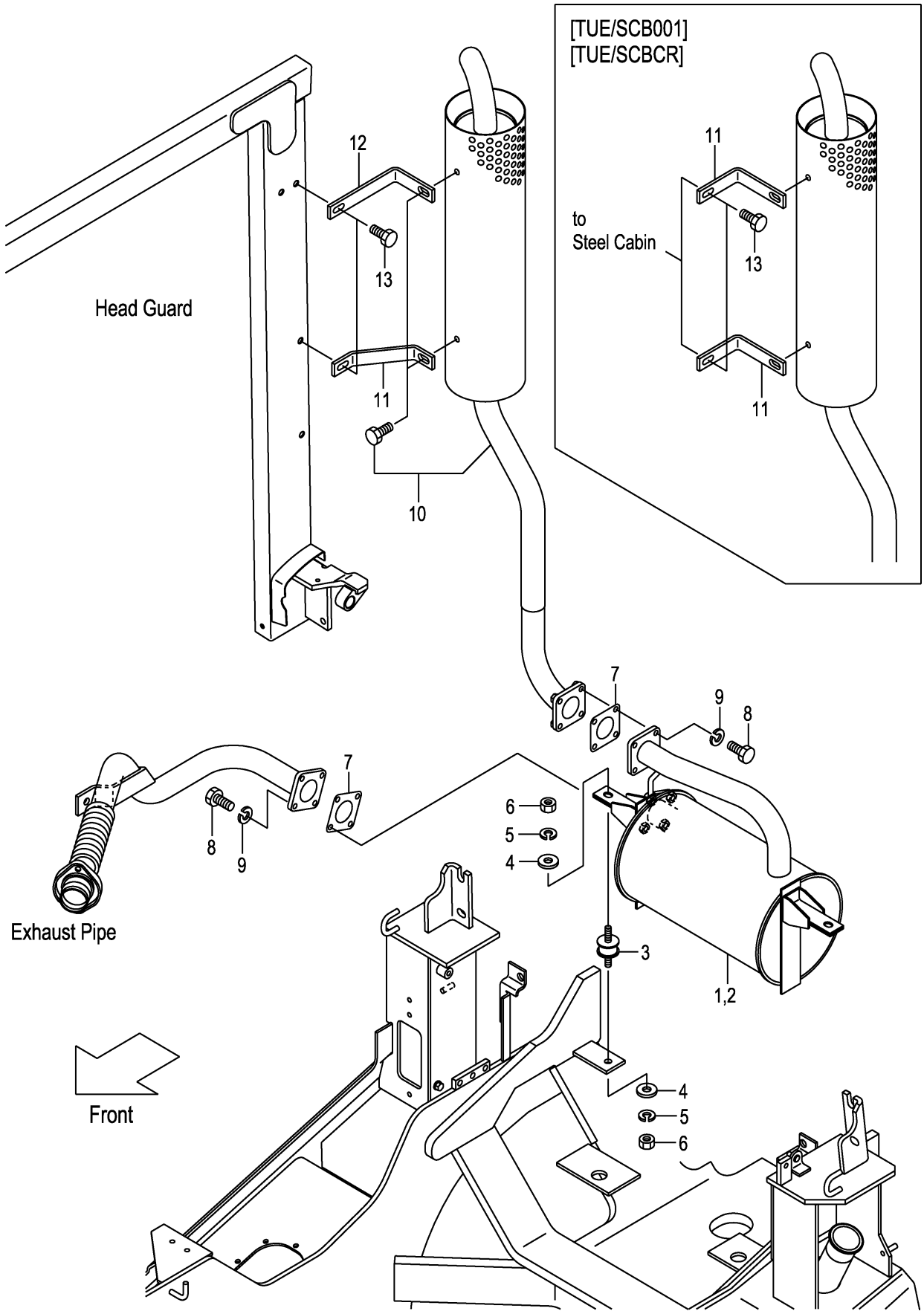

FIG.12

(F7Z32330)

A:FD30C3Z FD30T3Z

Item No	Part No.	Mark	Description		Req'd	Remarks : Serial No.
1	52N50-80201		MUFFLER	ﾏﾌﾗ	1	[TUE]
-	52N50-80211		MUFFLER	ﾏﾌﾗ	1	[EPM/TUE] INC.2
-	52N50-80221		MUFFLER	ﾏﾌﾗ	1	[CBM/TUE]
2	532A1-70201		CATALYST	ｷｬﾀﾘｽﾄ	1	[EPM/TUE]
3	539A0-82201		RUBBER	ﾗﾊﾞｰ	2	[TUE]
4	124T3-43041		PLATE	ﾌﾟﾚｰﾄ	4	[TUE]
5	02010-00008		WASHER	ﾜｯｼｬ	4	[TUE]
6	01400-00008		NUT	ﾅｯﾄ	4	[TUE]
7	217G2-32001		GASKET	ｶﾞｽｹｯﾄ	2	[TUE]
8	01181-08025		BOLT	ﾎﾞﾙﾄ	8	[TUE]
9	02000-00008		WASHER	ﾜｯｼｬ	8	[TUE]
10	52N50-80301		MUFFLER,VERTICAL	ﾏﾌﾗ	1	[TUE]
11	52N50-82001		STAY	ｽﾃｰ	1	[TUE]
-	52N50-82021		STAY	ｽﾃｰ	2	[TUE/SCB001][TUE/SCBCR]
12	52N50-82011		STAY	ｽﾃｰ	1	[TUE] (WITHOUT TUE/SCB001,TUE/SCBCR)
13	01185-08020		BOLT	ﾎﾞﾙﾄ	2	[TUE]

FIG.13 FRONT TUBE & JOINT

(F7Z32380) フロントチューブ&ジョイント

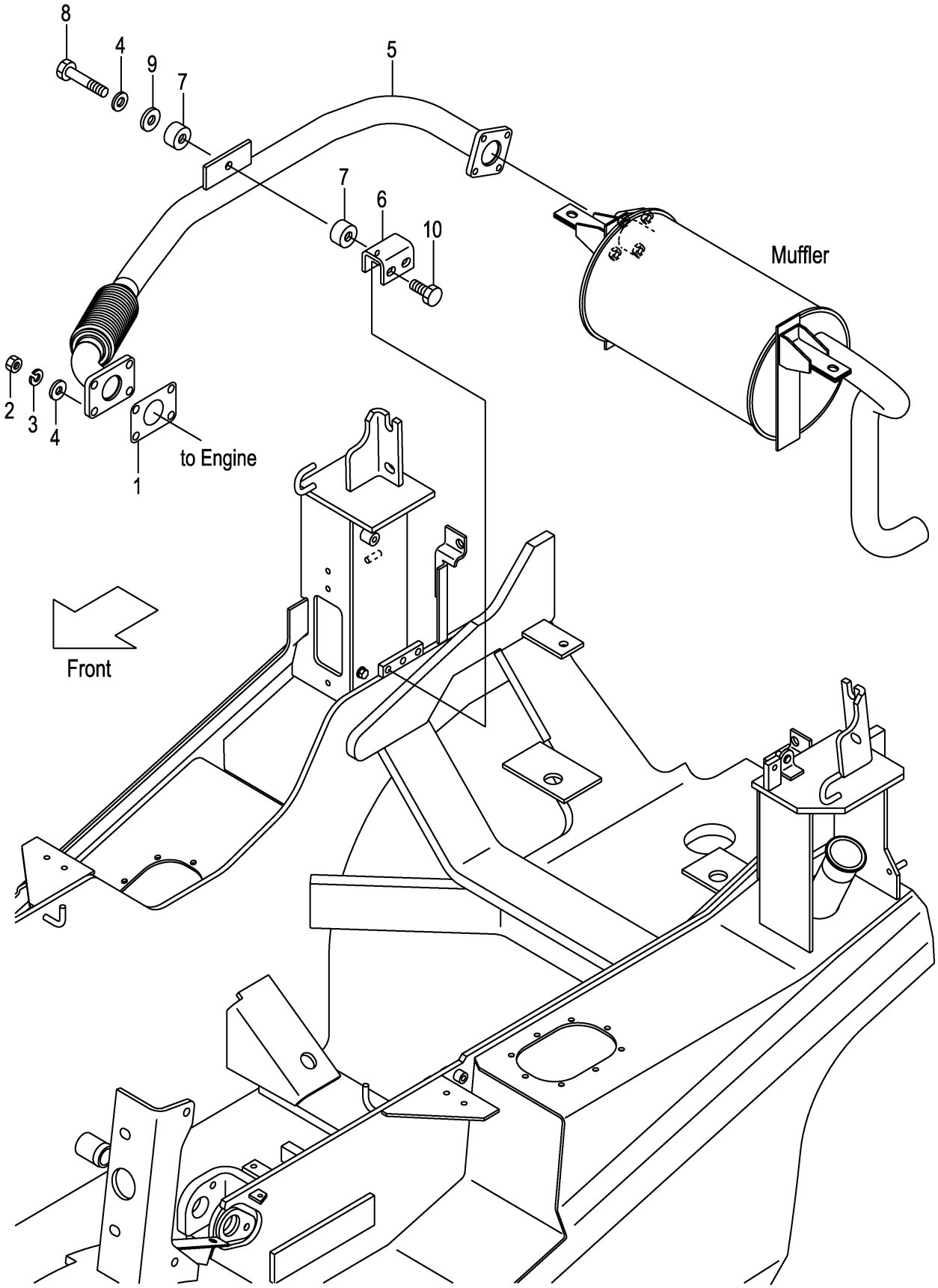

FIG.13

(F7Z32380)

A:FD30C3Z FD30T3Z

Item No	Part No.	Mark	Description		Req'd	Remarks : Serial No.
1	224G2-32011		GASKET	ｶﾞｽｹｯﾄ	1	
2	01400-20010		NUT	ﾅｯﾄ	4	
3	02010-00010		WASHER	ﾜｯｼｬ	4	
4	02000-00010		WASHER	ﾜｯｼｬ	5	
5	22U52-30111		PIPE,EXHAUST,C240	ﾊﾟｲﾌﾟ	1	
6	22N52-32021		BRACKET	ﾌﾞﾗｹｯﾄ	1	
7	22252-32241		RUBBER,CUSHION	ﾗﾊﾞｰ	2	
8	21232-32551		BOLT	ﾎﾞﾙﾄ	1	
9	23451-02011		WASHER	ﾜｯｼｬ	1	
10	01186-10020		BOLT	ﾎﾞﾙﾄ	2	

FIG.14 COMBINATION METER

(F7Z32410) コンビネーションメータ

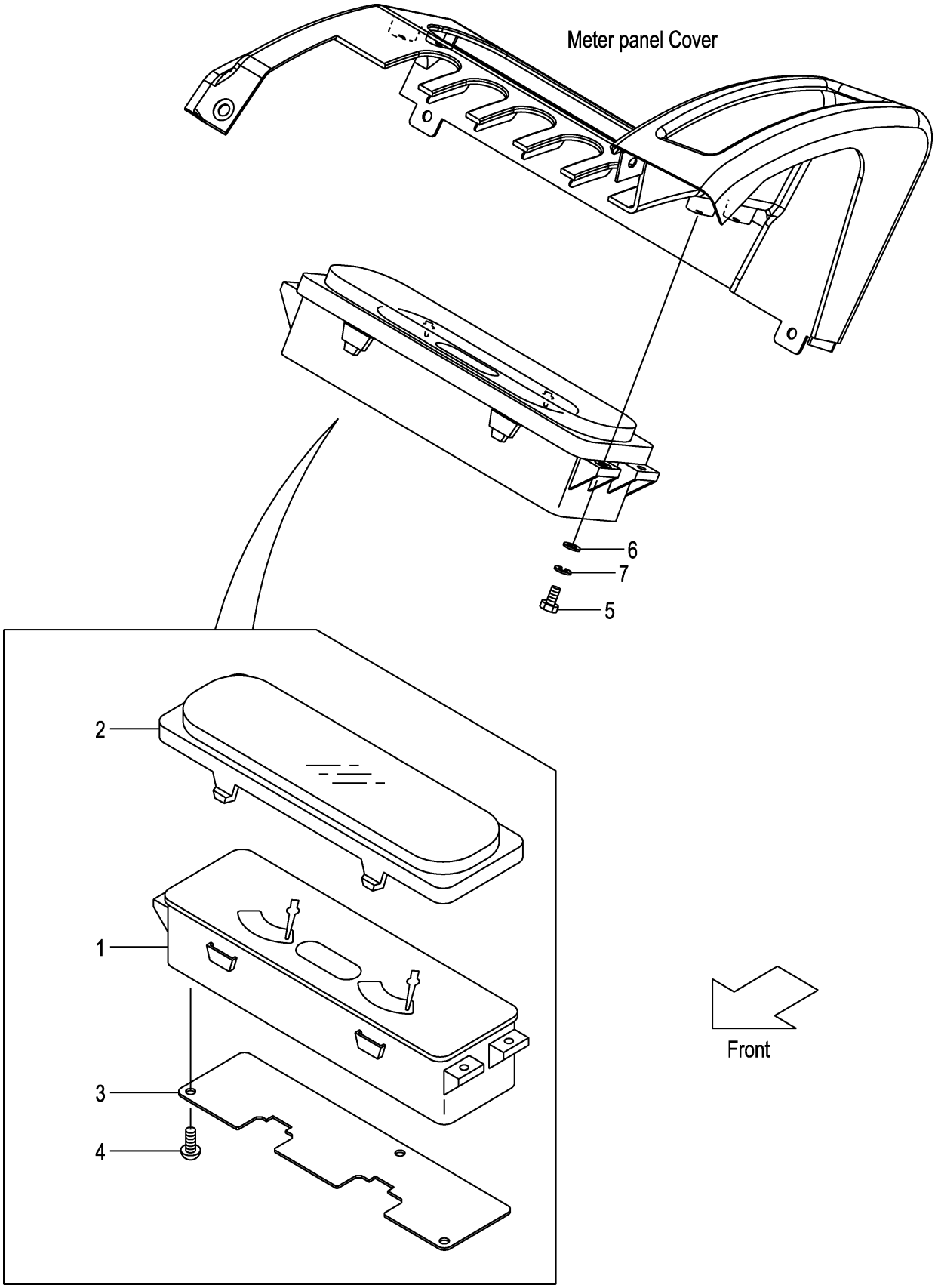

FIG.14

(F7Z32410)

A:FD30C3Z FD30T3Z

Item No	Part No.	Mark	Description		Req'd	Remarks : Serial No.
A1	22N52-40301		METER-ASSY,COMBINATION		1	INC.1-4
				ｺﾝﾋﾞﾈｰｼｮﾝﾒｰﾀｱｯｾﾝ		
-	52N56-20101		METER-ASSY,COMBINATION		1	[OKM][SIL] INC.1-4
				ｺﾝﾋﾞﾈｰｼｮﾝﾒｰﾀｱｯｾﾝ		
1	NO PART NO.	#	METER,COMBINATION	ﾒｰﾀ	1	
-	NO PART NO.	#	METER,COMBINATION	ﾒｰﾀ	1	[OKM][SIL]
2	22N52-42501		COVER	ｶﾊﾞｰ	1	
3	22N52-42511		PLATE	ﾌﾟﾚｰﾄ	1	
4	01043-03010		SCREW	ｽｸﾘｭ	3	
5	01100-04012		BOLT	ﾎﾞﾙﾄ	4	1-109
-	01185-04012		BOLT	ﾎﾞﾙﾄ	4	110-
6	02000-00004		WASHER	ﾜｯｼｬ	4	1-109
7	02010-00004		WASHER	ﾜｯｼｬ	4	1-109

FIG.15 FRONT GUARD WIRE HARNESS (CLUTCH)

(F7Z32420) フロントガードワイヤハーネス

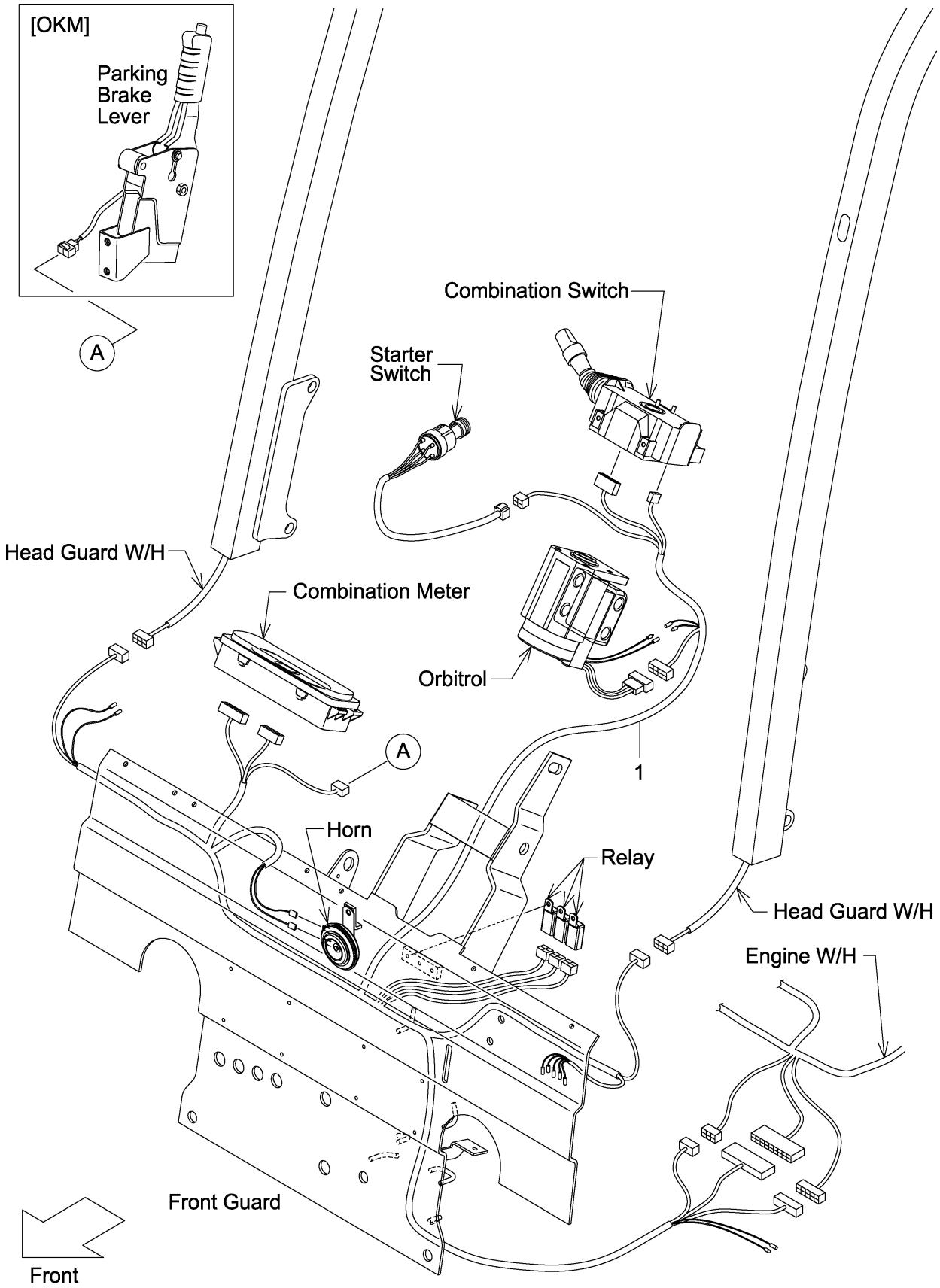

FIG.15

(F7Z32420)

A:FD30C3Z

Item No	Part No.	Mark	Description	Req'd	Remarks : Serial No.
1	22N42-42201		WIRE-HARNESS,F.GUARD ﾜｲﾔﾊｰﾈｽ	1	
-	52N43-72101		WIRE-HARNESS,F.GUARD ﾜｲﾔﾊｰﾈｽ	1	[FC]

FIG.16 FRONT GUARD WIRE HARNESS (TOR-CON)

(F7Z32430) フロントガードワイヤハーネス

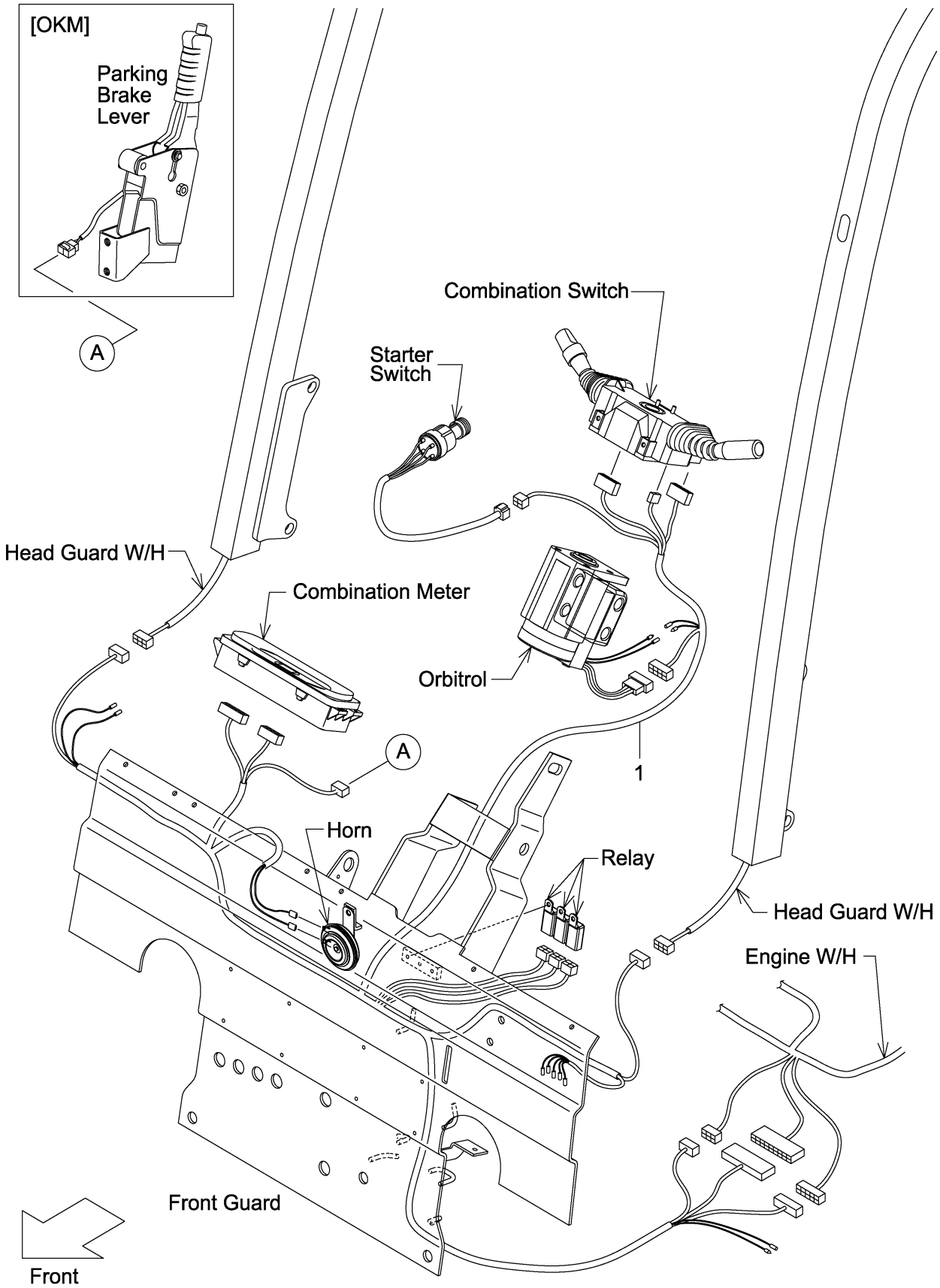

FIG.16

(F7Z32430)

A:FD30T3Z

Item No	Part No.	Mark	Description	Req'd	Remarks : Serial No.
1	22N52-42201		WIRE-HARNESS,F.GUARD ﾜｲﾔﾊｰﾈｽ	1	
-	52N53-72101		WIRE-HARNESS,F.GUARD ﾜｲﾔﾊｰﾈｽ	1	[FC]
-	52N52-32001		WIRE-HARNESS,F.GUARD ﾜｲﾔﾊｰﾈｽ	1	[LCR]
-	52N53-72301		WIRE-HARNESS,F.GUARD ﾜｲﾔﾊｰﾈｽ	1	[FC/LCR]

FIG.17 COMBINATION SWITCH (CLUTCH)

(F7Z32440) コンビネーションスイッチ

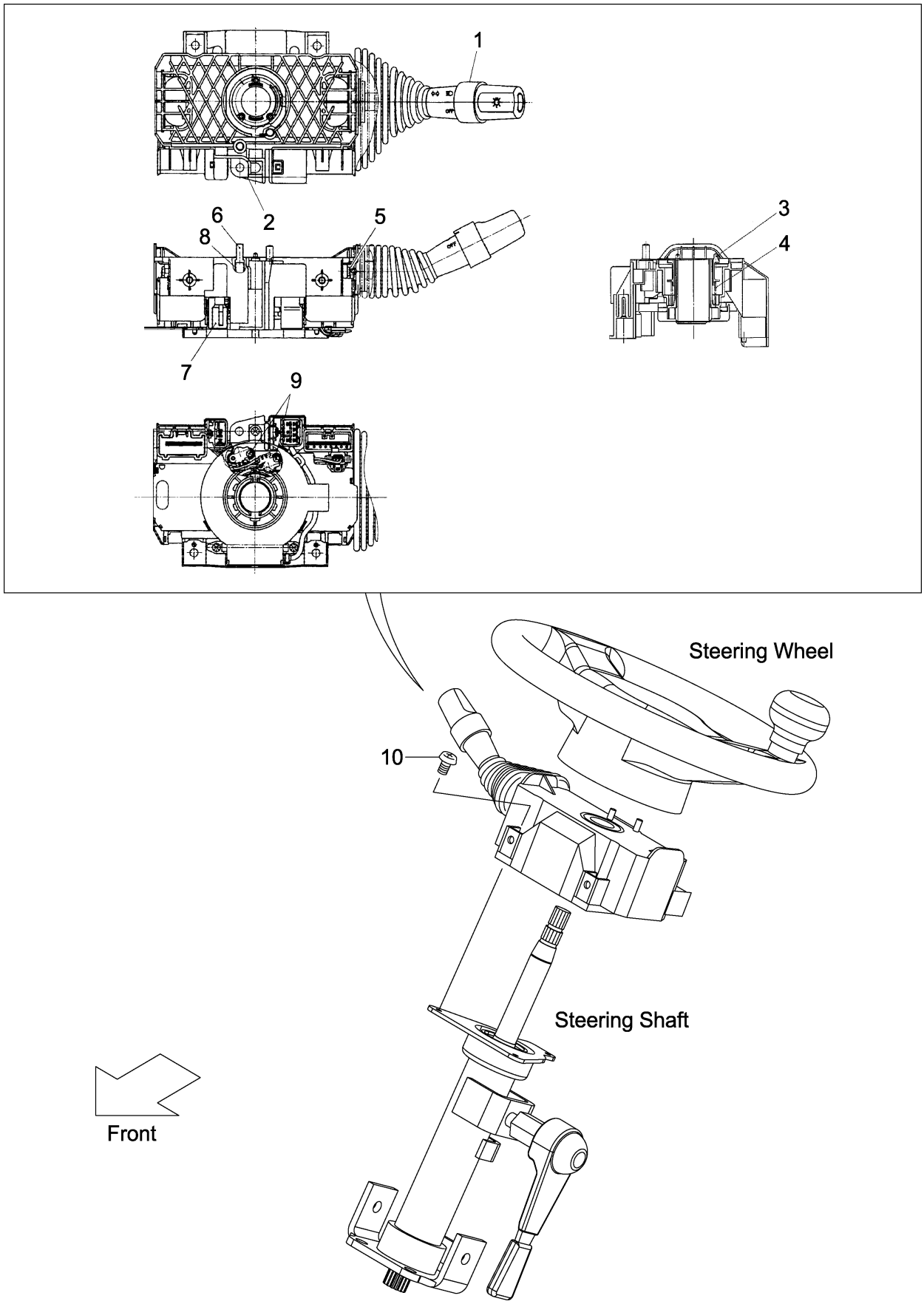

FIG.17

(F7Z32440)

A:FD30C3Z

Item No	Part No.	Mark	Description		Req'd	Remarks : Serial No.
A1	239A2-40501		SWITCH-ASSY,COMBINATION	ｽｲｯﾁｱｯｾﾝ	1	INC.1-9
1	280C2-42331		SWITCH,TURN-SIGNAL	ｽｲｯﾁ	1	
2	NO PART NO.	#	BODY	ﾎﾞﾃﾞｨ	1	
3	NO PART NO.	#	CAM,CANCEL,RH	ｶﾑ	1	
4	NO PART NO.	#	SPRING	ｽﾌﾟﾘﾝｸﾞ	1	
5	NO PART NO.	#	SCREW	ｽｸﾘｭ	4	
6	280C2-42351		CONTACT,HORN	ｺﾝﾀｸﾄ	2	
7	NO PART NO.	#	CODE,CP-HORN	ｺｰﾄﾞ	1	
8	NO PART NO.	#	SPRING	ｽﾌﾟﾘﾝｸﾞ	2	
9	NO PART NO.	#	SCREW	ｽｸﾘｭ	2	
10	01033-05014		SCREW	ｽｸﾘｭ	3	

FIG.18 COMBINATION SWITCH (TOR-CON)

(F7Z32450) コンビネーションスイッチ

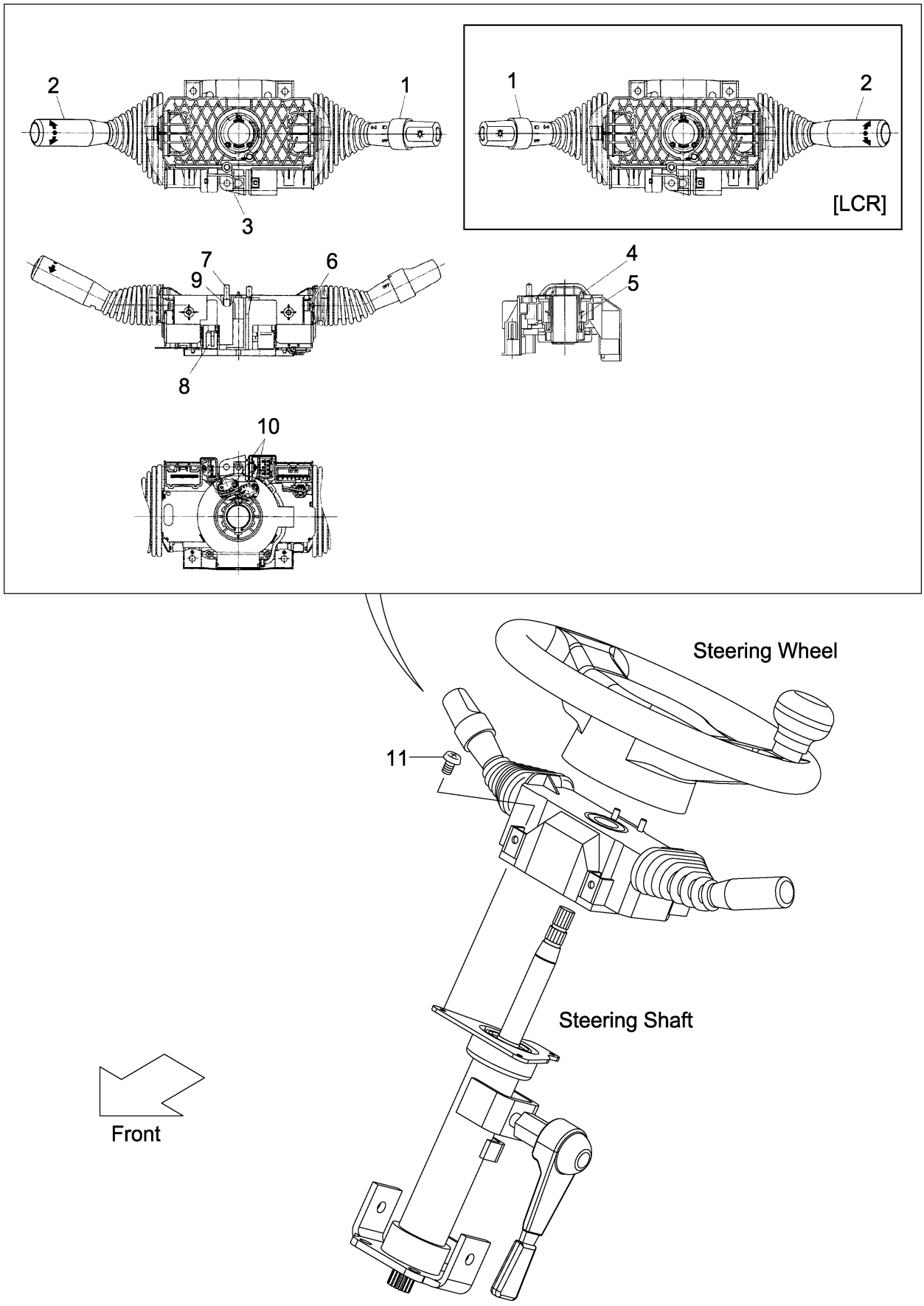

FIG.18

(F7Z32450)

A:FD30T3Z

Item No	Part No.	Mark	Description	Req'd	Remarks : Serial No.
A1	209K2-40501		SWITCH-ASSY,COMBINATION ｽｲｯﾁｱｯｾﾝ	1	INC.1-10
-	509K2-30101		SWITCH-ASSY,COMBINATION ｽｲｯﾁｱｯｾﾝ	1	[LCR] INC.1-10
1	280C2-42331		SWITCH,TURN-SIGNAL ｽｲｯﾁ	1	
-	280C2-42301		SWITCH,TURN-SIGNAL ｽｲｯﾁ	1	[LCR]
2	280C2-42341		SWITCH,DIRECTION ｽｲｯﾁ	1	
-	280C2-42311		SWITCH,DIRECTION ｽｲｯﾁ	1	[LCR]
3	NO PART NO.	#	BODY ﾎﾞﾃﾞｨ	1	
4	NO PART NO.	#	CAM,CANCEL,RH ｶﾑ	1	
-	NO PART NO.	#	CAM,CANCEL,RH ｶﾑ	1	[LCR]
5	NO PART NO.	#	SPRING ｽﾌﾟﾘﾝｸﾞ	1	
6	NO PART NO.	#	SCREW ｽｸﾘｭ	4	
7	280C2-42351		CONTACT,HORN ｺﾝﾀｸﾄ	2	
8	NO PART NO.	#	CODE,CP-HORN ｺｰﾄﾞ	1	
9	NO PART NO.	#	SPRING ｽﾌﾟﾘﾝｸﾞ	2	
10	NO PART NO.	#	SCREW ｽｸﾘｭ	2	
11	01033-05014		SCREW ｽｸﾘｭ	3	

FIG.19 ELECTRIC PARTS (CLUTCH)

(F7Z32480) エレクトリックパーツ

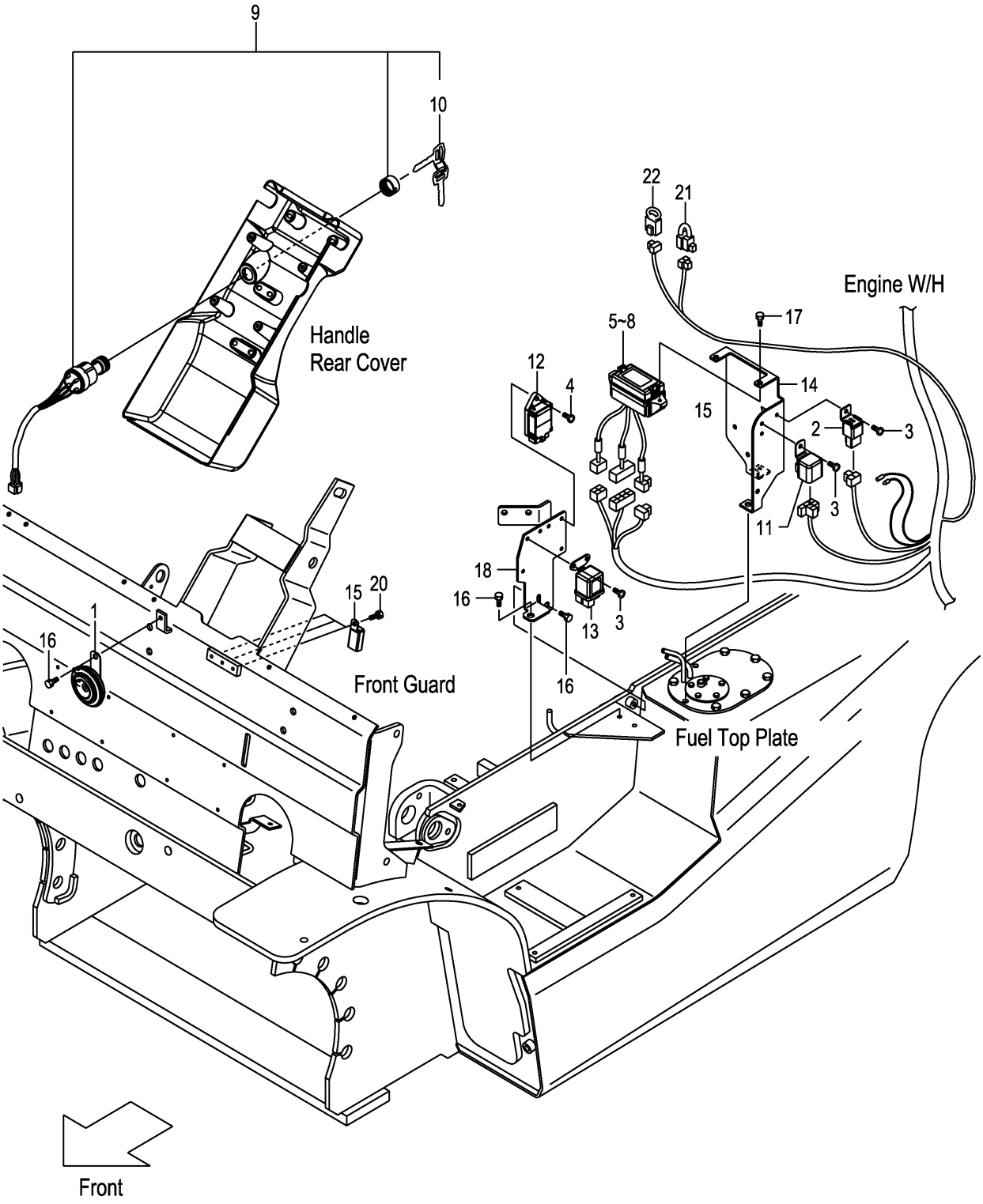

FIG.19

(F7Z32480)

A:FD30C3Z

Item No	Part No.	Mark	Description		Req'd	Remarks : Serial No.
1	216G2-43651		HORN	ﾎｰﾝ	1	
2	216G2-43711		UNIT,FLASHER	ﾕﾆｯﾄ	1	
3	214A2-42611		SCREW	ｽｸﾘｭ	4	
4	214A2-42621		SCREW	ｽｸﾘｭ	1	
5	22N52-42101		BOX,FUSE	ﾎﾞｯｸｽ	1	INC.6-8
6	22N52-42311		FUSE,3A	ﾋｭｰｽﾞ	5	
7	22N52-42321		FUSE,7.5A	ﾋｭｰｽﾞ	5	
8	22N52-42331		FUSE,15A	ﾋｭｰｽﾞ	3	
9	216G2-42311		SWITCH,STARTER	ｽｲｯﾁ	1	INC.10
10	216G2-43401		KEY,SPARE,511323	ｷｰ	1	(1SET=2PCS)
-	216G2-43411		KEY,SPARE,512421	ｷｰ	(1)	(1SET=2PCS)
-	216G2-43421		KEY,SPARE,513454	ｷｰ	(1)	(1SET=2PCS)
11	217G2-42301		RELAY,STARTER	ﾘﾚｰ	1	
12	239A2-42311		TIMER,QOS-3	ﾀｲﾏｰ	1	
13	239A2-42301		RELAY,GLOW-PLUG	ﾘﾚｰ	1	
14	22N52-42021		BRACKET,ELECTRIC	ﾌﾞﾗｹｯﾄ	1	
15	209K2-42351		RELAY,1A	ﾘﾚｰ	3	
16	01185-08016		BOLT	ﾎﾞﾙﾄ	3	
17	01185-06016		BOLT	ﾎﾞﾙﾄ	2	
18	22N52-42031		BRACKET,ELECTRIC	ﾌﾞﾗｹｯﾄ	1	
19	04913-10200	+	BAND	ﾊﾞﾝﾄﾞ	4	
20	01183-06010		BOLT	ﾎﾞﾙﾄ	3	
21	22N52-43001		RESISTOR	ﾚｼﾞｽﾀ	1	
22	21152-42091		DIODE	ﾀﾞｲｵｰﾄﾞ	1	

FIG.20 ELECTRIC PARTS (TOR-CON)

(F7Z32490) エレクトリックパーツ

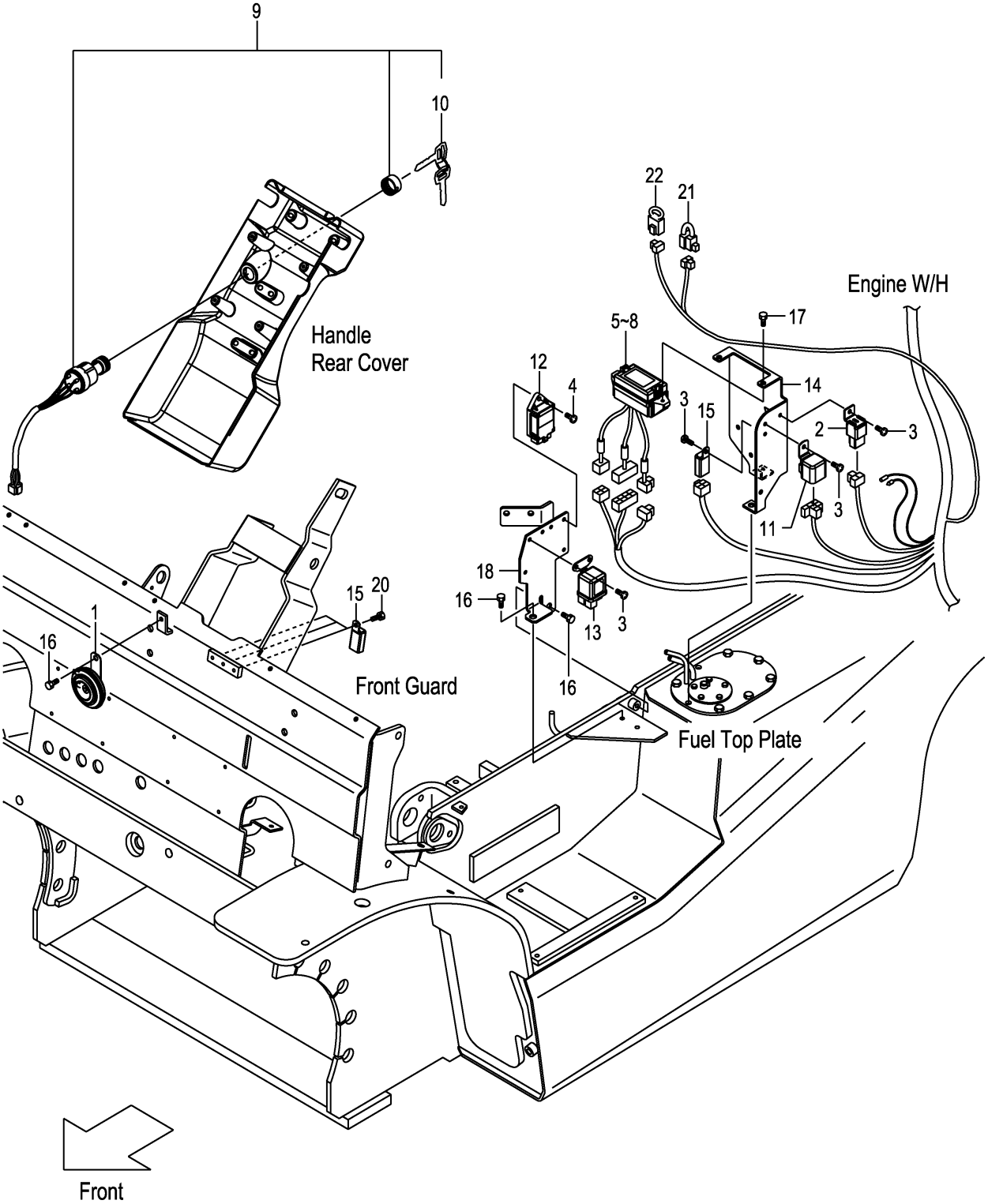

FIG.20

(F7Z32490)

A:FD30T3Z

Item No	Part No.	Mark	Description		Req'd	Remarks : Serial No.
1	216G2-43651		HORN	ﾎｰﾝ	1	
2	216G2-43711		UNIT,FLASHER	ﾕﾆｯﾄ	1	
3	214A2-42611		SCREW	ｽｸﾘｭ	5	
4	214A2-42621		SCREW	ｽｸﾘｭ	1	
5	22N52-42101		BOX,FUSE	ﾎﾞｯｸｽ	1	INC.6-8
6	22N52-42311		FUSE,3A	ﾋｭｰｽﾞ	5	
7	22N52-42321		FUSE,7.5A	ﾋｭｰｽﾞ	5	
8	22N52-42331		FUSE,15A	ﾋｭｰｽﾞ	3	
9	216G2-42311		SWITCH,STARTER	ｽｲｯﾁ	1	INC.10
10	216G2-43401		KEY,SPARE,511323	ｷｰ	1	(1SET=2PCS)
-	216G2-43411		KEY,SPARE,512421	ｷｰ	(1)	(1SET=2PCS)
-	216G2-43421		KEY,SPARE,513454	ｷｰ	(1)	(1SET=2PCS)
11	217G2-42301		RELAY,STARTER	ﾘﾚｰ	1	
12	239A2-42311		TIMER,QOS-3	ﾀｲﾏｰ	1	
13	239A2-42301		RELAY,GLOW-PLUG	ﾘﾚｰ	1	
14	22N52-42021		BRACKET,ELECTRIC	ﾌﾞﾗｹｯﾄ	1	
15	209K2-42351		RELAY,1A	ﾘﾚｰ	4	
16	01185-08016		BOLT	ﾎﾞﾙﾄ	3	
17	01185-06016		BOLT	ﾎﾞﾙﾄ	2	
18	22N52-42031		BRACKET,ELECTRIC	ﾌﾞﾗｹｯﾄ	1	
19	04913-10200	+	BAND	ﾊﾞﾝﾄﾞ	4	
20	01183-06010		BOLT	ﾎﾞﾙﾄ	3	
21	22N52-43001		RESISTOR	ﾚｼﾞｽﾀ	1	
22	21152-42091		DIODE	ﾀﾞｲｵｰﾄﾞ	1	

FIG.21 ENGINE WIRE HARNESS (CLUTCH)

(F7Z324C0) エンジンワイヤハーネス

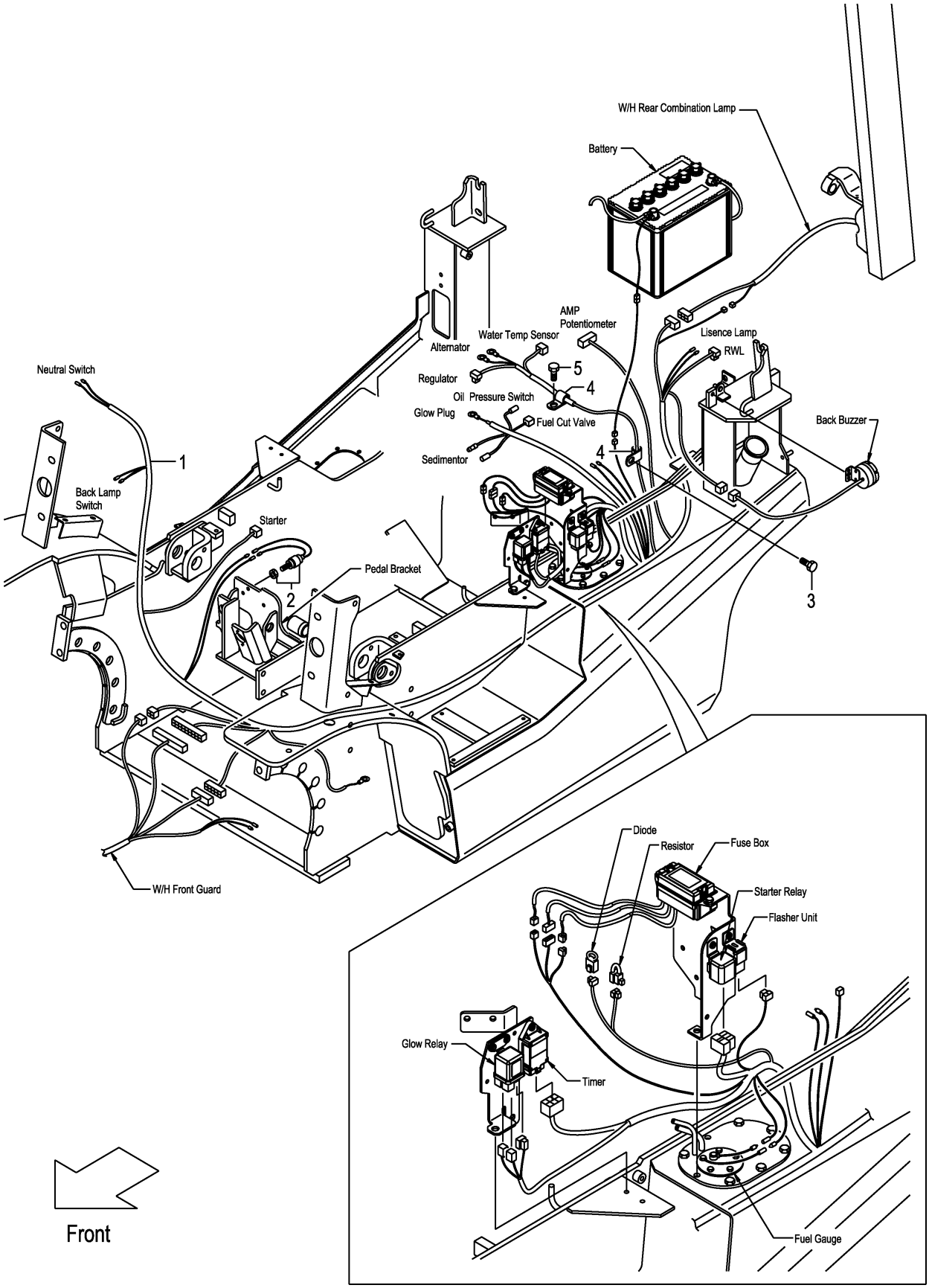

FIG.21

(F7Z324C0)

A:FD30C3Z

Item No	Part No.	Mark	Description	Req'd	Remarks : Serial No.
1	22U42-42211		WIRE-HARNESS,ENGINE ﾜｲﾔﾊｰﾈｽ	1	
2	23232-42072		SWITCH,STOP-LAMP ｽｲｯﾁ	1	
3	01183-06016		BOLT ﾎﾞﾙﾄ	1	
4	214A2-42331		CLIP ｸﾘｯﾌﾟ	2	
5	01183-08016		BOLT ﾎﾞﾙﾄ	1	

FIG.22 ENGINE WIRE HARNESS (TOR-CON)

(F7Z324D0) エンジンワイヤハーネス

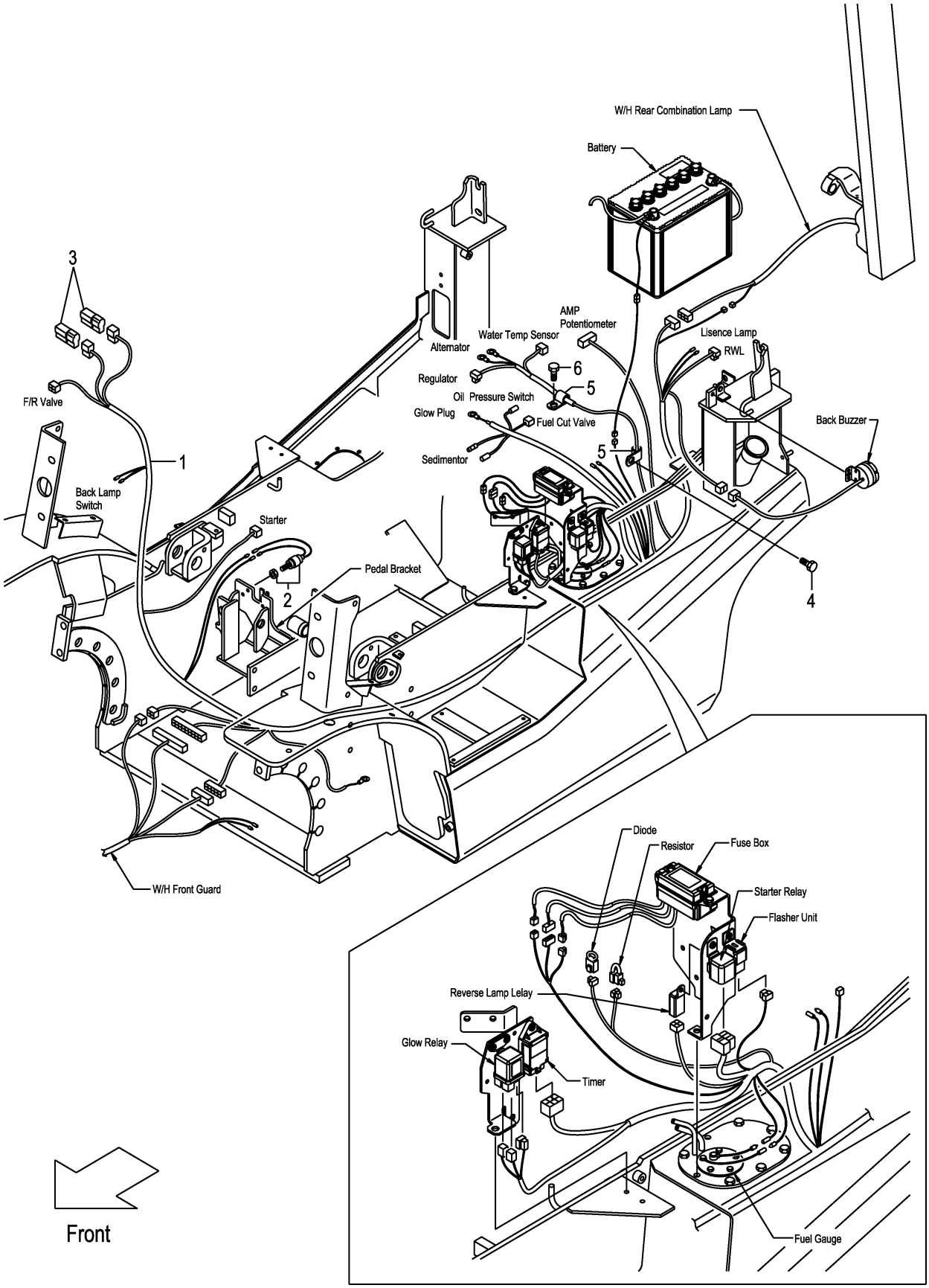

FIG.22

(F7Z324D0)

A:FD30T3Z

Item No	Part No.	Mark	Description	Req'd	Remarks : Serial No.
1	22U52-42211		WIRE-HARNESS,ENGINE ﾜｲﾔﾊｰﾈｽ	1	
2	23232-42072		SWITCH,STOP-LAMP ｽｲｯﾁ	1	
3	230C2-42201		DIODE,3A ﾀﾞｲｵｰﾄﾞ	2	
4	01183-06016		BOLT ﾎﾞﾙﾄ	1	
5	214A2-42331		CLIP ｸﾘｯﾌﾟ	2	
6	01183-08016		BOLT ﾎﾞﾙﾄ	1	

FIG.23 BATTERY

(F7Z324F0) ﾊﾞｯﾃﾘ

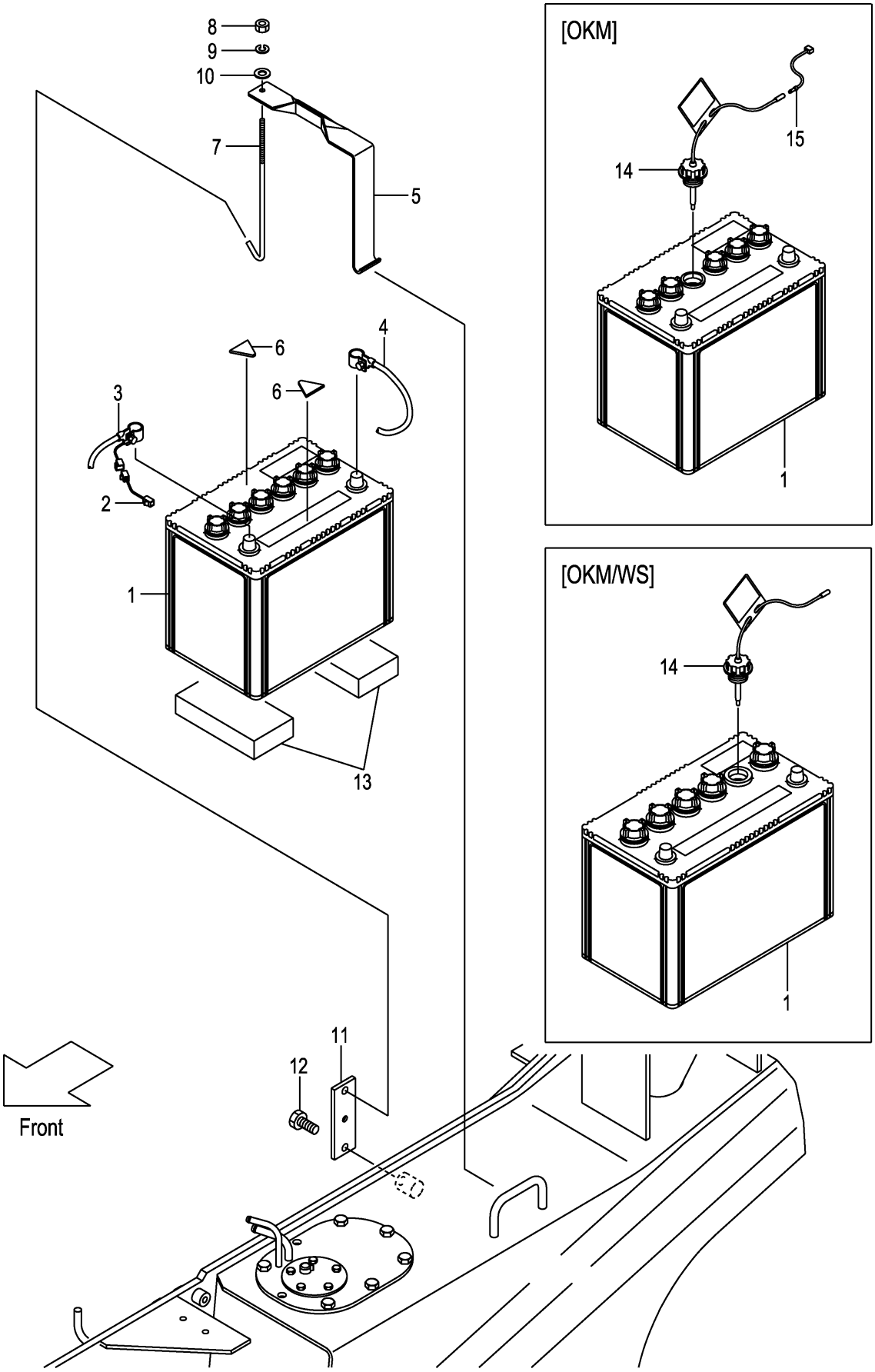

A:FD30C3Z FD30T3Z

Item No	Part No.	Mark	Description		Req'd	Remarks : Serial No.
1	58106-31011		BATTERY,WET,80D26R	ﾊﾞｯﾃﾘ	1	
-	534A7-02001		BATTERY,WET,115D31R	ﾊﾞｯﾃﾘ	1	[WS]
2	25592-42081		WIRE,FUSIBLE-LINK	ﾜｲﾔ	1	
3	22U52-42151		CABLE,BATTERY(+)	ｹｰﾌﾞﾙ	1	
4	238A2-42151		CABLE,BATTERY(-)	ｹｰﾌﾞﾙ	1	
5	217G2-42021		HOLDER,BATTERY	ﾎﾙﾀﾞ	1	
6	216G2-43111		RUBBER	ﾗﾊﾞｰ	2	
7	256C2-42231		BOLT,ANCHOR	ﾎﾞﾙﾄ	1	
8	01420-00006		NUT	ﾅｯﾄ	1	(-2005.7.4)
-	01400-00006		NUT	ﾅｯﾄ	1	(2005.7.5-)
9	02010-00006		WASHER	ﾜｯｼｬ	1	
10	23452-42181		WASHER	ﾜｯｼｬ	1	(-2005.7.4)
-	02000-00006		WASHER	ﾜｯｼｬ	1	(2005.7.5-)
11	22N52-42111		HOOK,ANCHOR-BOLT	ﾌｯｸ	1	
12	01185-08016		BOLT	ﾎﾞﾙﾄ	1	
13	22N52-42301		RUBBER	ﾗﾊﾞｰ	2	
14	521A2-42001		CAP,BATTERY	ｷｬｯﾌﾟ	1	[OKM]
-	522A2-42001		CAP,BATTERY	ｷｬｯﾌﾟ	1	[OKM/WS]
15	539A6-22021		WIRE,LEAD	ﾜｲﾔ	1	[OKM](WITHOUT OKM/WS)

FIG.24 HEAD LAMP & FRONT COMBINATION LAMP

(F7Z324G0) ﾍｯﾄﾞﾗﾝﾌﾟ&ﾌﾛﾝﾄｺﾝﾋﾞﾈｰｼｮﾝﾗﾝﾌﾟ

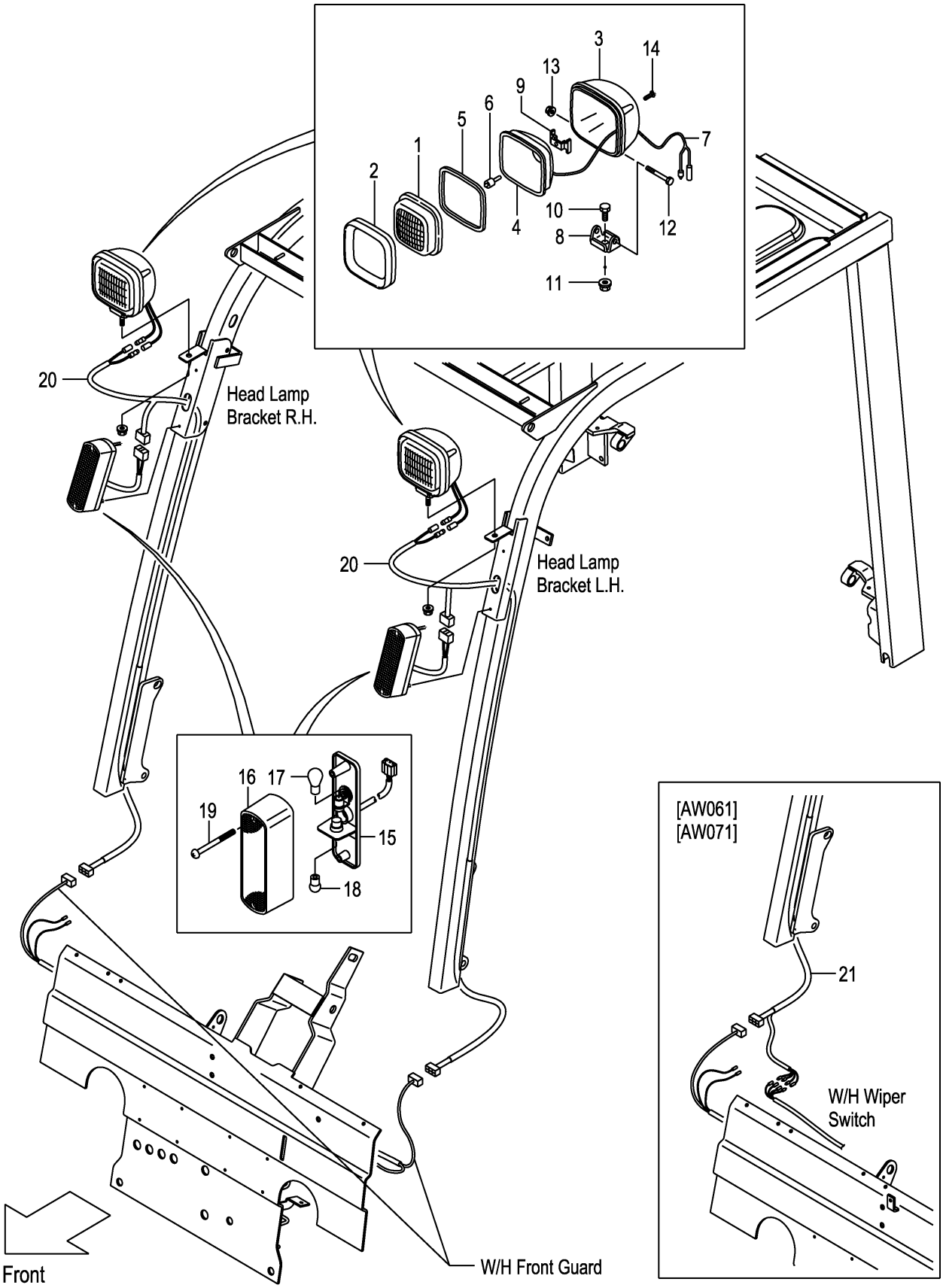

A:FD30C3Z FD30T3Z

Item No	Part No.	Mark	Description		Req'd	Remarks : Serial No.
A1	216G2-40602		LAMP-ASSY,HEAD	ﾍｯﾄﾞﾗﾝﾌﾟｱｯｾﾝ	2	INC.1-14
1	216G2-43502		LENS	ﾚﾝｽﾞ	2	
2	216G2-43631		RIM	ﾘﾑ	2	
3	NO PART NO.	#	HOUSING	ﾊｳｼﾞﾝｸﾞ	2	
4	NO PART NO.	#	REFLECTOR	ﾘﾌﾚｸﾀ	2	
5	216G2-43531		GASKET	ｶﾞｽｹｯﾄ	2	
6	216G2-43542		BULB,12V/55W	ﾊﾞﾙﾌﾞ	2	
7	216G2-43551		WIRE,LEAD	ﾜｲﾔ	2	
8	216G2-43562		BRACKET	ﾌﾞﾗｹｯﾄ	2	
9	216G2-43571		SPRING	ｽﾌﾟﾘﾝｸﾞ	2	
10	216G2-43582		BOLT	ﾎﾞﾙﾄ	2	
11	216G2-43592		NUT	ﾅｯﾄ	2	
12	216G2-43602		BOLT	ﾎﾞﾙﾄ	2	
13	216G2-43611		NUT	ﾅｯﾄ	2	
14	216G2-43622		SCREW	ｽｸﾘｭ	8	
A2	216G2-40701		LAMP-ASSY,FRONT-COMBINATION	ﾌﾛﾝﾄｺﾝﾋﾞﾈｰｼｮﾝﾗﾝﾌﾟｱｯｾﾝ	2	INC.15-19
15	NO PART NO.	#	BODY	ﾎﾞﾃﾞｨ	2	
16	216G2-40731		LENS	ﾚﾝｽﾞ	2	
17	216G2-40711		BULB,12V/27W	ﾊﾞﾙﾌﾞ	2	
18	216G2-40721		BULB,12V/10W	ﾊﾞﾙﾌﾞ	2	
19	NO PART NO.		SCREW	ｽｸﾘｭ	4	
20	239A2-42221		WIRE-HARNESS,H.GUARD	ﾜｲﾔﾊｰﾈｽ	2	
-	534A9-22211		WIRE-HARNESS,H.GUARD	ﾜｲﾔﾊｰﾈｽ	2	[HL][BKH]
-	239A2-42221		WIRE-HARNESS,H.GUARD	ﾜｲﾔﾊｰﾈｽ	1	[AW061][AW071]
21	52N55-42301		WIRE-HARNESS,H.GUARD	ﾜｲﾔﾊｰﾈｽ	1	[AW061][AW071]

FIG.25 REAR COMBINATION LAMP

(F7Z324H0) ﾘﾔｰｺﾝﾋﾞﾈｰｼｮﾝﾗﾝﾌﾟ

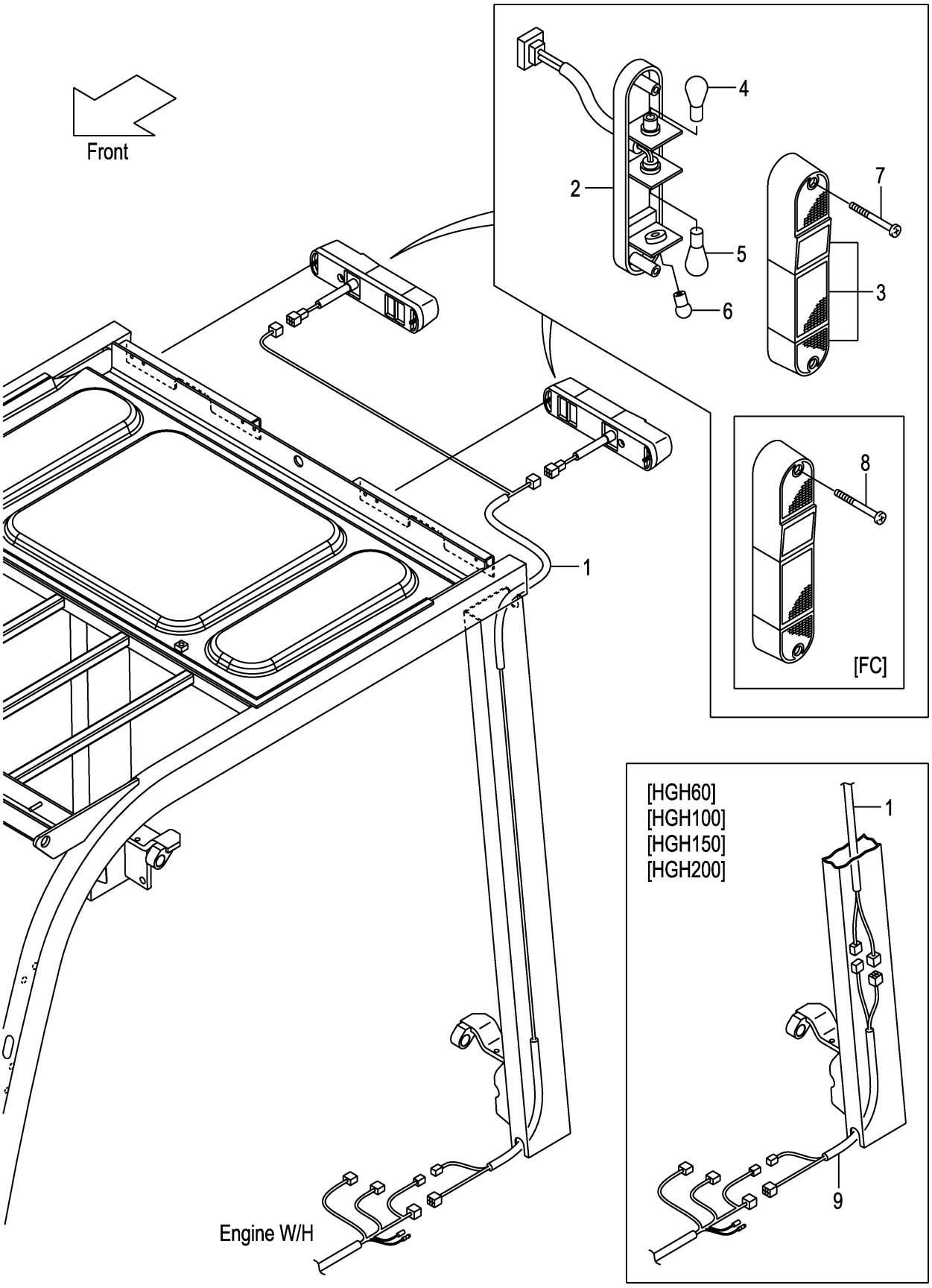

FIG.25

(F7Z324H0)

A:FD30C3Z FD30T3Z

Item No	Part No.	Mark	Description		Req'd	Remarks : Serial No.
1	22N52-42251		WIRE-HARNESS,R-COMBINATION	ﾜｲﾔﾊｰﾈｽ	1	
A1	209K2-42002		LAMP-ASSY,REAR-COMBINATION	ﾘﾔｰｺﾝﾋﾞﾈｰｼｮﾝﾗﾝﾌﾟｱｯｾﾝ	2	INC.2-7
2	NO PART NO.	#	BODY	ﾎﾞﾃﾞｨ	2	
3	209K2-42021		LENS,PLASTIC	ﾚﾝｽﾞ	2	
4	210F2-42021		BULB,12V/23,8W	ﾊﾞﾙﾌﾞ	2	
5	209K2-42041		BULB,12V/27W	ﾊﾞﾙﾌﾞ	2	
6	210F2-42031		BULB,12V/10W	ﾊﾞﾙﾌﾞ	2	
7	01030-05055		SCREW	ｽｸﾘｭ	4	(WITHOUT FC)
8	514A3-72091		BOLT,PAN-HEAD	ﾎﾞﾙﾄ	4	[FC]
9	52N55-02451		WIRE-HARNESS,JOINT	ﾜｲﾔﾊｰﾈｽ	1	[HGH060][HGH100][HGH150] [HGH200]

FIG.26 REAR COMBINATION LAMP [RRE][SCB001][SCBCR]

(F7Z324J0) リヤーコンビネーションランプ

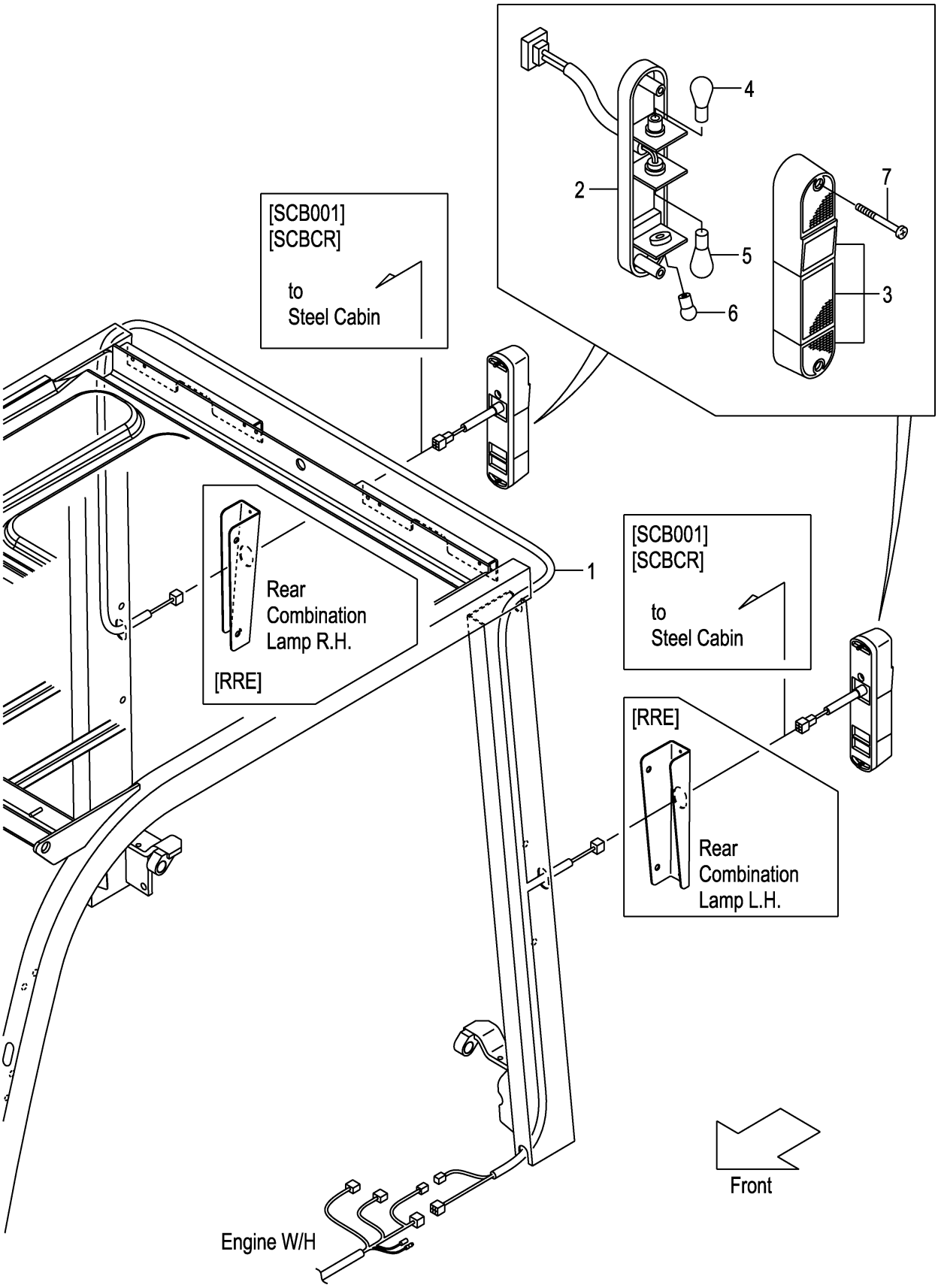

FIG.26

(F7Z324J0)

A:FD30C3Z FD30T3Z

Item No	Part No.	Mark	Description	Req'd	Remarks : Serial No.
1	52N59-92201		WIRE-HARNESS,R-COMBINATION ﾜｲﾔﾊｰﾈｽ	1	[RRE]
-	52N59-92201		WIRE-HARNESS,R-COMBINATION ﾜｲﾔﾊｰﾈｽ	1	[SCB001][SCBCR]
A1	209K2-42002		LAMP-ASSY,REAR-COMBINATION ﾘﾔｰｺﾝﾋﾞﾈｰｼｮﾝﾗﾝﾌﾟｱｯｾﾝ	2	[RRE][SCB001][SCBCR] INC.2-7
2	NO PART NO.	#	BODY ﾎﾞﾃﾞｨ	2	[RRE][SCB001][SCBCR]
3	209K2-42021		LENS,PLASTIC ﾚﾝｽﾞ	2	[RRE][SCB001][SCBCR]
4	210F2-42021		BULB,12V/23,8W ﾊﾞﾙﾌﾞ	2	[RRE][SCB001][SCBCR]
5	209K2-42041		BULB,12V/27W ﾊﾞﾙﾌﾞ	2	[RRE][SCB001][SCBCR]
6	210F2-42031		BULB,12V/10W ﾊﾞﾙﾌﾞ	2	[RRE][SCB001][SCBCR]
7	01030-05055		SCREW ｽｸﾘｭ	4	[RRE][SCB001][SCBCR]

FIG.27 LICENSE LAMP [RRE]

(F7Z324K0) ﾗｲｾﾝｽﾗﾝﾌﾟ

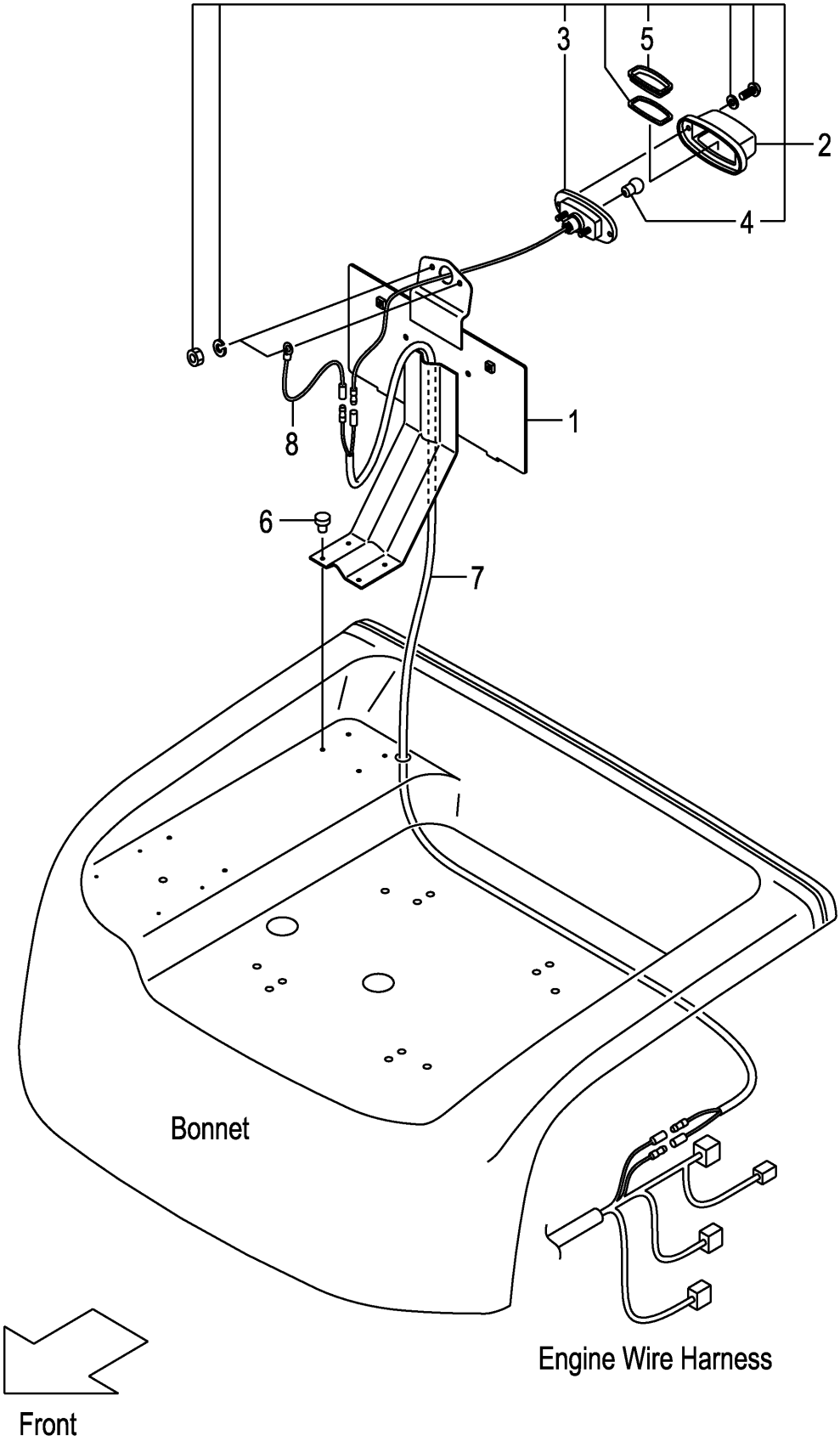

FIG.27

(F7Z324K0)

A:FD30C3Z FD30T3Z

Item No	Part No.	Mark	Description	Req'd	Remarks : Serial No.
1	52N59-92101		BRACKET,NUMBER-PLATE ﾌﾞﾗｹｯﾄ	1	[RRE]
2	22132-40202		LAMP,LICENSE ﾗﾝﾌﾟ	1	[RRE] INC.3-5
3	NO PART NO.	#	BODY ﾎﾞﾃﾞｨ	1	[RRE]
4	22132-40041		BULB,12V/10W ﾊﾞﾙﾌﾞ	1	[RRE]
5	22192-42411		LENS,PLASTIC ﾚﾝｽﾞ	1	[RRE]
6	22256-42001		RIVET ﾘﾍﾞｯﾄ	4	[RRE]
7	558A9-92001		WIRE-HARNESS,LICENSE ﾜｲﾔﾊｰﾈｽ	1	[RRE]
8	222A2-42511		WIRE,LEAD ﾜｲﾔ	1	[RRE]

FIG.28 LICENSE LAMP [SCB001/RRE][SCBCR/RRE]

(F7Z324L0) ﾗｲｾﾝｽﾗﾝﾌﾟ

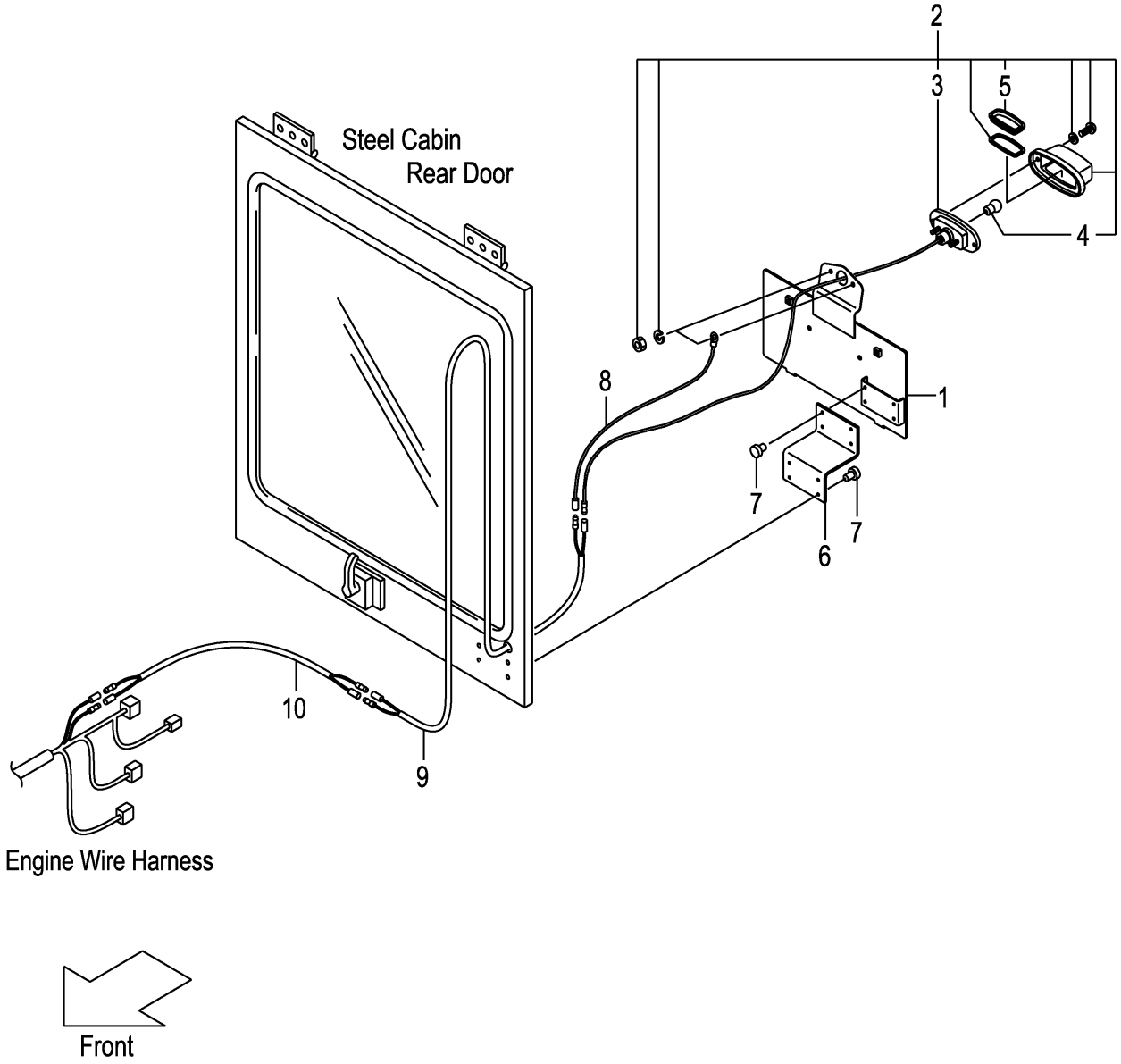

FIG.28

(F7Z324L0)

A:FD30C3Z FD30T3Z

Item No	Part No.	Mark	Description		Req'd	Remarks : Serial No.
1	531A0-52521		BRACKET,NUMBER-PLATE	ﾌﾞﾗｹｯﾄ	1	[SCB001/RRE][SCBCR/RRE]
2	22132-40202		LAMP,LICENSE	ﾗﾝﾌﾟ	1	[SCB001/RRE][SCBCR/RRE]
						INC.3-5
3	NO PART NO.	#	BODY	ﾎﾞﾃﾞｨ	1	[SCB001/RRE][SCBCR/RRE]
4	22132-40041		BULB,12V/10W	ﾊﾞﾙﾌﾞ	1	[SCB001/RRE][SCBCR/RRE]
5	22192-42411		LENS,PLASTIC	ﾚﾝｽﾞ	1	[SCB001/RRE][SCBCR/RRE]
6	539A5-32361		BRACKET	ﾌﾞﾗｹｯﾄ	1	[SCB001/RRE][SCBCR/RRE]
7	22256-42001		RIVET	ﾘﾍﾞｯﾄ	8	[SCB001/RRE][SCBCR/RRE]
8	222A2-42511		WIRE,LEAD	ﾜｲﾔ	1	[SCB001/RRE][SCBCR/RRE]
9	534A9-92131		WIRE-HARNESS,LICENSE	ﾜｲﾔﾊｰﾈｽ	1	[SCB001/RRE][SCBCR/RRE]
10	558A9-92001		WIRE-HARNESS,LICENSE	ﾜｲﾔﾊｰﾈｽ	1	[SCB001/RRE][SCBCR/RRE]

FIG.29 LICENSE LAMP [LP]

(F7Z324N0) ﾗｲｾﾝｽﾗﾝﾌﾟ

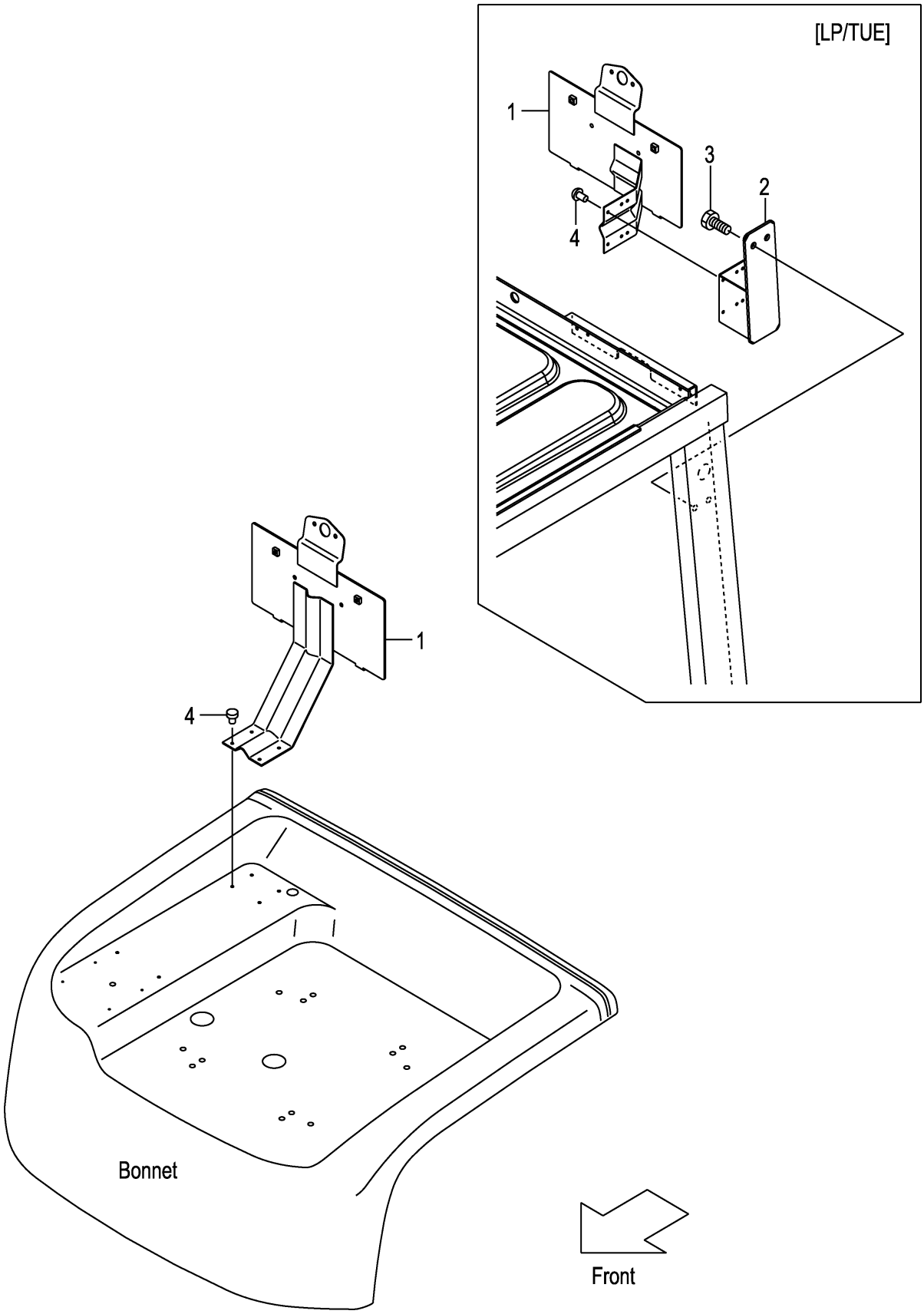

FIG.29

(F7Z324N0)

A:FD30C3Z FD30T3Z

Item No	Part No.	Mark	Description	Req'd	Remarks : Serial No.
1	52N59-92101		BRACKET,NUMBER-PLATE ﾌﾞﾗｹｯﾄ	1	[LP]
-	509P9-90101		BRACKET,NUMBER-PLATE ﾌﾞﾗｹｯﾄ	1	[LP/TUE]
2	52N59-92501		BRACKET,LP ﾌﾞﾗｹｯﾄ	1	[LP/TUE]
3	01185-08016		BOLT ﾎﾞﾙﾄ	2	[LP/TUE]
4	22256-42001		RIVET ﾘﾍﾞｯﾄ	4	[LP]

FIG.30 REAR WORKING LIGHT [RWLR]

(F7Z324P0) ﾘﾔｰﾜｰｷﾝｸﾞﾗｲﾄ

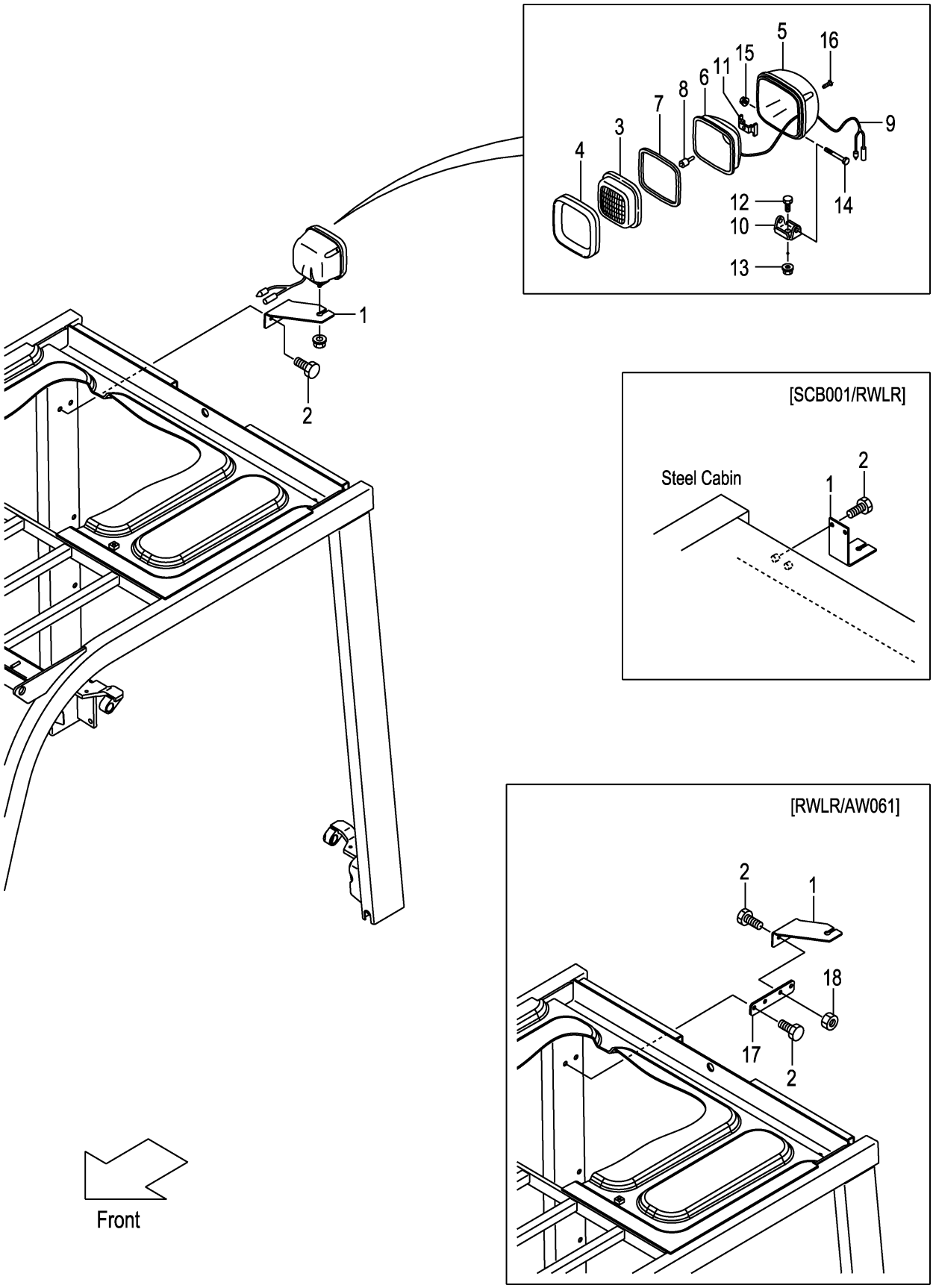

A:FD30C3Z FD30T3Z

Item No	Part No.	Mark	Description		Req'd	Remarks : Serial No.
1	52N51-42161		BRACKET,RWL,RH	ﾌﾞﾗｹｯﾄ	1	[RWLR]
-	530C1-42001		BRACKET,RWL	ﾌﾞﾗｹｯﾄ	1	[SCB001/RWLR]
2	01185-08016		BOLT	ﾎﾞﾙﾄ	2	[RWLR]
-	01185-08016		BOLT	ﾎﾞﾙﾄ	4	[RWLR/AW061]
-	01185-08020		BOLT	ﾎﾞﾙﾄ	2	[SCB001/RWLR]
A1	216G2-40602		LAMP-ASSY,HEAD	ﾍｯﾄﾞﾗﾝﾌﾟｱｯｾﾝ	1	[RWLR] INC.3-16
3	216G2-43502		LENS	ﾚﾝｽﾞ	1	[RWLR]
4	216G2-43631		RIM	ﾘﾑ	1	[RWLR]
5	NO PART NO.	#	HOUSING	ﾊｳｼﾞﾝｸﾞ	1	[RWLR]
6	NO PART NO.	#	REFLECTOR	ﾘﾌﾚｸﾀ	1	[RWLR]
7	216G2-43531		GASKET	ｶﾞｽｹｯﾄ	1	[RWLR]
8	216G2-43542		BULB,12V/55W	ﾊﾞﾙﾌﾞ	1	[RWLR]
9	216G2-43551		WIRE,LEAD	ﾜｲﾔ	1	[RWLR]
10	216G2-43562		BRACKET	ﾌﾞﾗｹｯﾄ	1	[RWLR]
11	216G2-43571		SPRING	ｽﾌﾟﾘﾝｸﾞ	1	[RWLR]
12	216G2-43582		BOLT	ﾎﾞﾙﾄ	1	[RWLR]
13	216G2-43592		NUT	ﾅｯﾄ	1	[RWLR]
14	216G2-43602		BOLT	ﾎﾞﾙﾄ	1	[RWLR]
15	216G2-43611		NUT	ﾅｯﾄ	1	[RWLR]
16	216G2-43622		SCREW	ｽｸﾘｭ	4	[RWLR]
17	52N51-42301		PLATE	ﾌﾟﾚｰﾄ	1	[RWLR/AW061]
18	01400-00008		NUT	ﾅｯﾄ	2	[RWLR/AW061]

FIG.31 REAR WORKING LIGHT [RWLL]

(F7Z324Q0) ﾘﾔｰﾜｰｷﾝｸﾞﾗｲﾄ

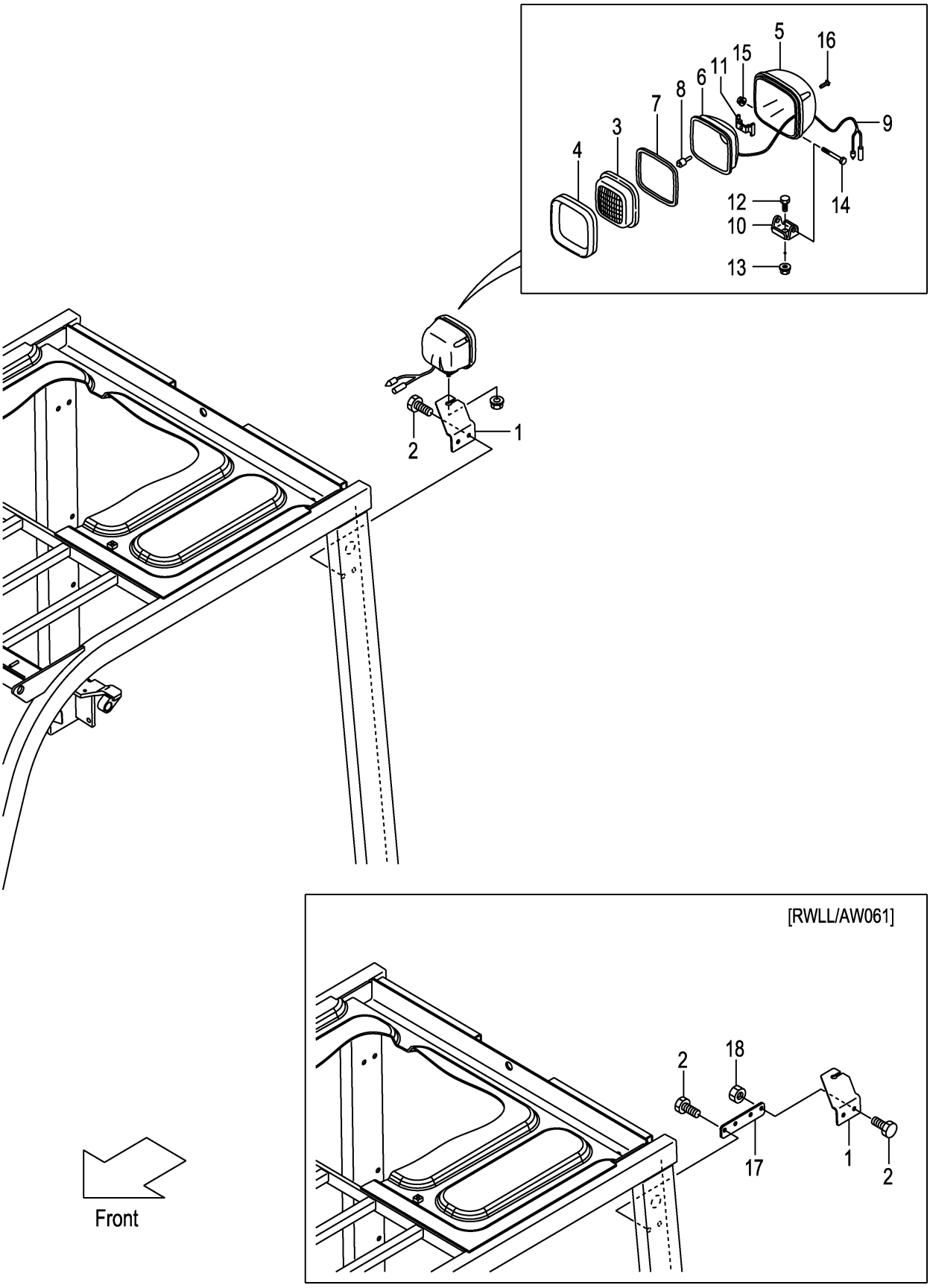

FIG.31

(F7Z324Q0)

A:FD30C3Z FD30T3Z

Item No	Part No.	Mark	Description		Req'd	Remarks : Serial No.
1	52N51-42151		BRACKET,RWL,LH	ﾌﾞﾗｹｯﾄ	1	[RWLL]
2	01185-08016		BOLT	ﾎﾞﾙﾄ	2	[RWLL]
-	01185-08016		BOLT	ﾎﾞﾙﾄ	4	[RWLL/AW061]
A1	216G2-40602		LAMP-ASSY,HEAD	ﾍｯﾄﾞﾗﾝﾌﾟｱｯｾﾝ	1	[RWLL] INC.3-16
3	216G2-43502		LENS	ﾚﾝｽﾞ	1	[RWLL]
4	216G2-43631		RIM	ﾘﾑ	1	[RWLL]
5	NO PART NO.	#	HOUSING	ﾊｳｼﾞﾝｸﾞ	1	[RWLL]
6	NO PART NO.	#	REFLECTOR	ﾘﾌﾚｸﾀ	1	[RWLL]
7	216G2-43531		GASKET	ｶﾞｽｹｯﾄ	1	[RWLL]
8	216G2-43542		BULB,12V/55W	ﾊﾞﾙﾌﾞ	1	[RWLL]
9	216G2-43551		WIRE,LEAD	ﾜｲﾔ	1	[RWLL]
10	216G2-43562		BRACKET	ﾌﾞﾗｹｯﾄ	1	[RWLL]
11	216G2-43571		SPRING	ｽﾌﾟﾘﾝｸﾞ	1	[RWLL]
12	216G2-43582		BOLT	ﾎﾞﾙﾄ	1	[RWLL]
13	216G2-43592		NUT	ﾅｯﾄ	1	[RWLL]
14	216G2-43602		BOLT	ﾎﾞﾙﾄ	1	[RWLL]
15	216G2-43611		NUT	ﾅｯﾄ	1	[RWLL]
16	216G2-43622		SCREW	ｽｸﾘｭ	4	[RWLL]
17	52N51-42301		PLATE	ﾌﾟﾚｰﾄ	1	[RWLL/AW061]
18	01400-00008		NUT	ﾅｯﾄ	2	[RWLL/AW061]

FIG.32 REAR WORKING LIGHT [RWL2]

(F7Z324R0) ﾘﾔｰﾜｰｷﾝｸﾞﾗｲﾄ

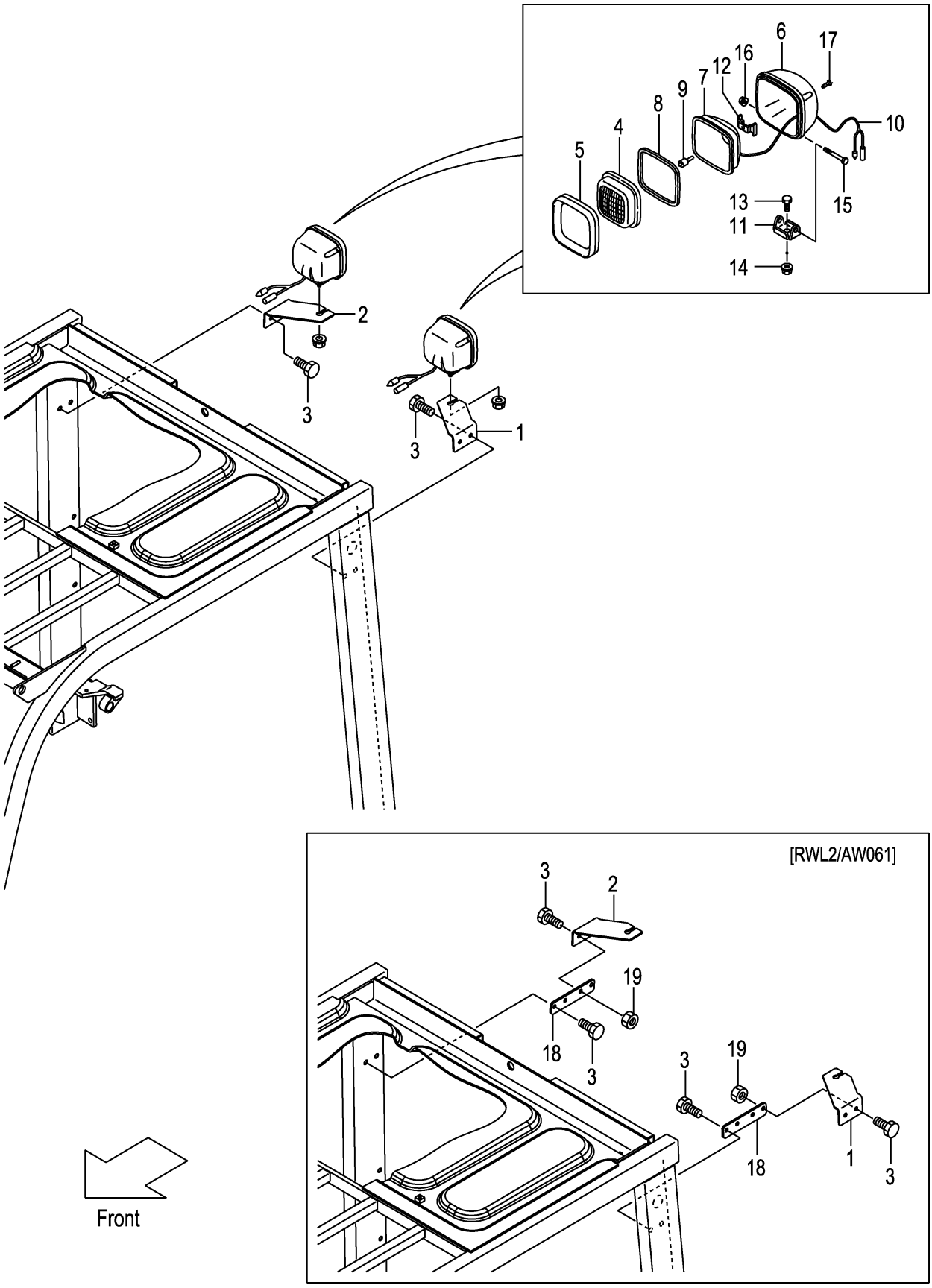

A:FD30C3Z FD30T3Z

Item No	Part No.	Mark	Description		Req'd	Remarks : Serial No.
1	52N51-42151		BRACKET,RWL,LH	ﾌﾞﾗｹｯﾄ	1	[RWL2]
2	52N51-42161		BRACKET,RWL,RH	ﾌﾞﾗｹｯﾄ	1	[RWL2]
3	01185-08016		BOLT	ﾎﾞﾙﾄ	4	[RWL2]
-	01185-08016		BOLT	ﾎﾞﾙﾄ	8	[RWL2/AW061]
A1	216G2-40602		LAMP-ASSY,HEAD	ﾍｯﾄﾞﾗﾝﾌﾟｱｯｾﾝ	2	[RWL2] INC.4-17
4	216G2-43502		LENS	ﾚﾝｽﾞ	2	[RWL2]
5	216G2-43631		RIM	ﾘﾑ	2	[RWL2]
6	NO PART NO.	#	HOUSING	ﾊｳｼﾞﾝｸﾞ	2	[RWL2]
7	NO PART NO.	#	REFLECTOR	ﾘﾌﾚｸﾀ	2	[RWL2]
8	216G2-43531		GASKET	ｶﾞｽｹｯﾄ	2	[RWL2]
9	216G2-43542		BULB,12V/55W	ﾊﾞﾙﾌﾞ	2	[RWL2]
10	216G2-43551		WIRE,LEAD	ﾜｲﾔ	2	[RWL2]
11	216G2-43562		BRACKET	ﾌﾞﾗｹｯﾄ	2	[RWL2]
12	216G2-43571		SPRING	ｽﾌﾟﾘﾝｸﾞ	2	[RWL2]
13	216G2-43582		BOLT	ﾎﾞﾙﾄ	2	[RWL2]
14	216G2-43592		NUT	ﾅｯﾄ	2	[RWL2]
15	216G2-43602		BOLT	ﾎﾞﾙﾄ	2	[RWL2]
16	216G2-43611		NUT	ﾅｯﾄ	2	[RWL2]
17	216G2-43622		SCREW	ｽｸﾘｭ	8	[RWL2]
18	52N51-42301		PLATE	ﾌﾟﾚｰﾄ	2	[RWL2/AW061]
19	01400-00008		NUT	ﾅｯﾄ	4	[RWL2/AW061]

FIG.33 REAR WORKING LIGHT [RWL/FE][RWL/TUE]

(F7Z324S0) エレクトリックパーツ

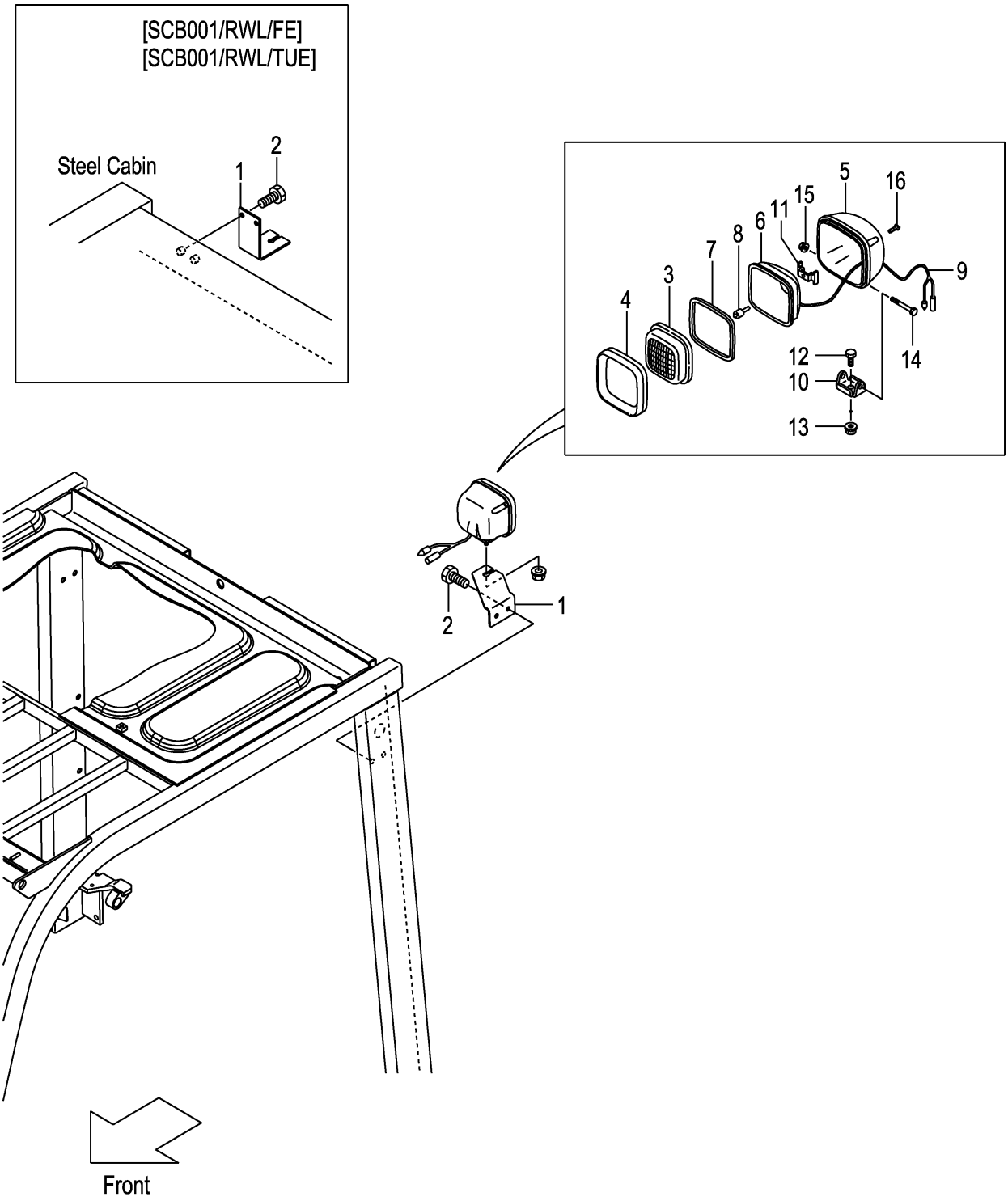

FIG.33
(F7Z324S0)

A:FD30C3Z FD30T3Z:131-

Item No	Part No.	Mark	Description		Req'd	Remarks : Serial No.
1	52N51-42151		BRACKET,RWL,LH	ﾌﾞﾗｹｯﾄ	1	[RWL/FE][RWL/TUE]
-	530C1-42001		BRACKET,RWL	ﾌﾞﾗｹｯﾄ	1	[SCB001/RWL/FE]
						[SCB001/RWL/TUE]
2	01185-08016		BOLT	ﾎﾞﾙﾄ	2	[RWL/FE][RWL/TUE]
-	01185-08020		BOLT	ﾎﾞﾙﾄ	2	[SCB001/RWL/FE]
						[SCB001/RWL/TUE]
A1	216G2-40602		LAMP-ASSY,HEAD	ﾍｯﾄﾞﾗﾝﾌﾟｱｯｾﾝ	1	[RWL/FE][RWL/TUE] INC.3-16
3	216G2-43502		LENS	ﾚﾝｽﾞ	1	[RWL/FE][RWL/TUE]
4	216G2-43631		RIM	ﾘﾑ	1	[RWL/FE][RWL/TUE]
5	NO PART NO.	#	HOUSING	ﾊｳｼﾞﾝｸﾞ	1	[RWL/FE][RWL/TUE]
6	NO PART NO.	#	REFLECTOR	ﾘﾌﾚｸﾀ	1	[RWL/FE][RWL/TUE]
7	216G2-43531		GASKET	ｶﾞｽｹｯﾄ	1	[RWL/FE][RWL/TUE]
8	216G2-43542		BULB,12V/55W	ﾊﾞﾙﾌﾞ	1	[RWL/FE][RWL/TUE]
9	216G2-43551		WIRE,LEAD	ﾜｲﾔ	1	[RWL/FE][RWL/TUE]
10	216G2-43562		BRACKET	ﾌﾞﾗｹｯﾄ	1	[RWL/FE][RWL/TUE]
11	216G2-43571		SPRING	ｽﾌﾟﾘﾝｸﾞ	1	[RWL/FE][RWL/TUE]
12	216G2-43582		BOLT	ﾎﾞﾙﾄ	1	[RWL/FE][RWL/TUE]
13	216G2-43592		NUT	ﾅｯﾄ	1	[RWL/FE][RWL/TUE]
14	216G2-43602		BOLT	ﾎﾞﾙﾄ	1	[RWL/FE][RWL/TUE]
15	216G2-43611		NUT	ﾅｯﾄ	1	[RWL/FE][RWL/TUE]
16	216G2-43622		SCREW	ｽｸﾘｭ	4	[RWL/FE][RWL/TUE]

FIG.34 REAR WORKING LIGHT WIRE HARNESS [RWL]

(F7Z324T0) リヤーワーキング゛ライトワイヤハーネス

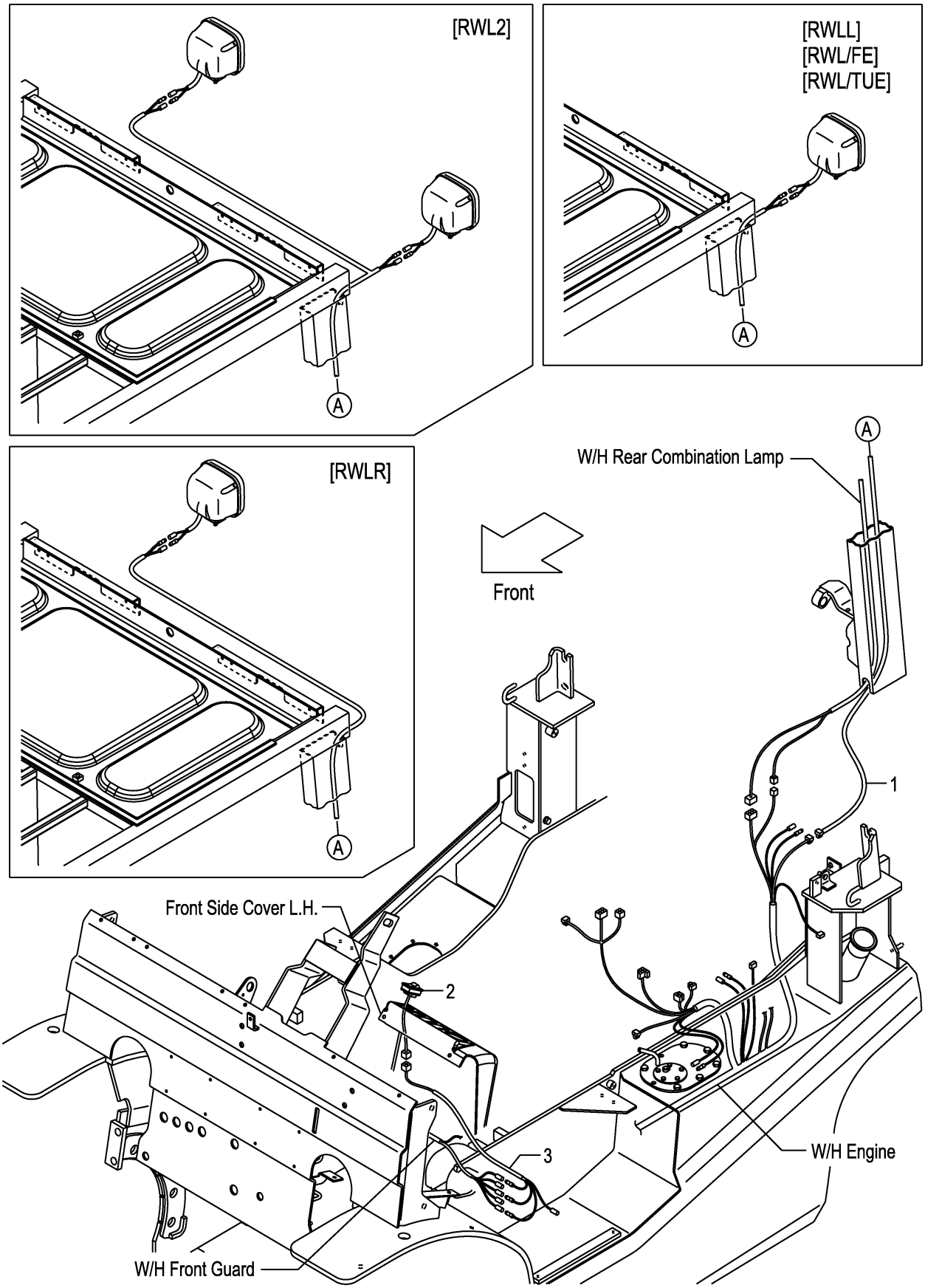

FIG.34
(F7Z324T0)

A:FD30C3Z FD30T3Z

Item No	Part No.	Mark	Description		Req'd	Remarks : Serial No.
1	52N51-42101		WIRE,LEAD,RWL	ﾜｲﾔ	1	[RWLR]
-	52N51-42111		WIRE,LEAD,RWL	ﾜｲﾔ	1	[RWLL]
-	52N51-42121		WIRE,LEAD,RWL	ﾜｲﾔ	1	[RWL2]
-	52N51-42111		WIRE,LEAD,RWL	ﾜｲﾔ	1	[RWL/FE][RWL/TUE]
2	52N51-42401		SWITCH,RWL	ｽｲｯﾁ	1	[RWLR][RWLL][RWL2]
-	52N51-42401		SWITCH,RWL	ｽｲｯﾁ	1	[RWL/FE][RWL/TUE]
3	52N51-42411		WIRE-HARNESS,SWITCH	ﾜｲﾔﾊｰﾈｽ	1	[RWLR][RWLL][RWL2]
-	52N51-42411		WIRE-HARNESS,SWITCH	ﾜｲﾔﾊｰﾈｽ	1	[RWL/FE][RWL/TUE]
-	52N51-42511		WIRE-HARNESS,SWITCH	ﾜｲﾔﾊｰﾈｽ	1	[RWLR/PLR][RWLL/PLR] [RWL2/PLR]
-	52N51-42511		WIRE-HARNESS,SWITCH	ﾜｲﾔﾊｰﾈｽ	1	[RWL/PLR/FE][RWL/PLR/TUE]

FIG.35 REAR WORKING LIGHT WIRE HARNESS [RWL/BBR]

(F7Z324U0) リヤーワーキング゛ライトワイヤハーネス

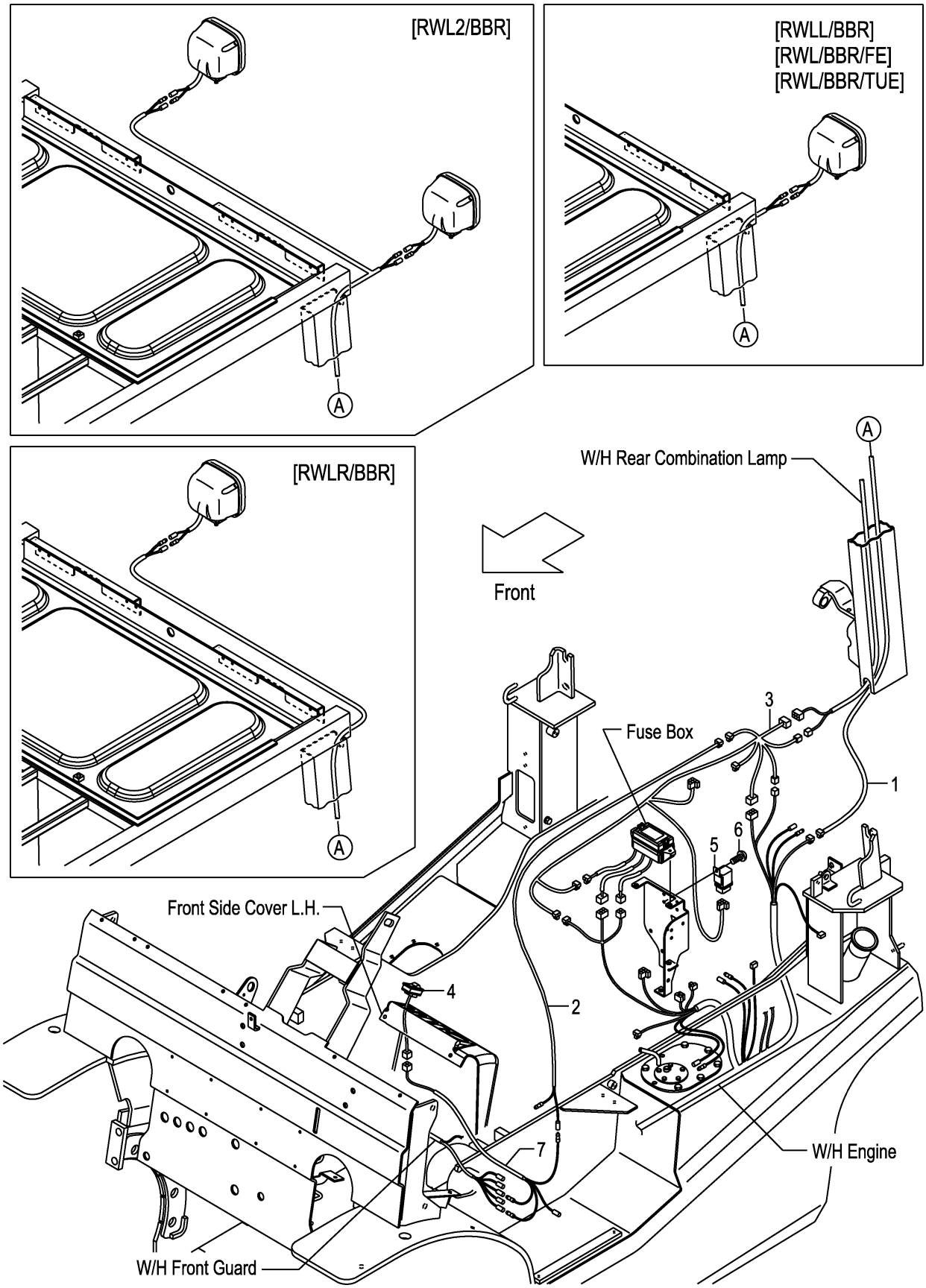

A:FD30C3Z FD30T3Z

Item No	Part No.	Mark	Description		Req'd	Remarks : Serial No.
1	52N51-42101		WIRE,LEAD,RWL	ﾜｲﾔ	1	[RWLR/BBR]
-	52N51-42111		WIRE,LEAD,RWL	ﾜｲﾔ	1	[RWLL/BBR]
-	52N51-42121		WIRE,LEAD,RWL	ﾜｲﾔ	1	[RWL2/BBR]
-	52N51-42111		WIRE,LEAD,RWL	ﾜｲﾔ	1	[RWL/BBR/FE][RWL/BBR/TUE]
2	516G1-42111		WIRE,LEAD,RWL	ﾜｲﾔ	1	[RWLR/BBR][RWLL/BBR]
						[RWL2/BBR]
-	516G1-42111		WIRE,LEAD,RWL	ﾜｲﾔ	1	[RWL/BBR/FE][RWL/BBR/TUE]
3	52N58-92111		WIRE-HARNESS,BBR	ﾜｲﾔﾊｰﾈｽ	1	[RWLR/BBR][RWLL/BBR]
						[RWL2/BBR]
-	52N58-92111		WIRE-HARNESS,BBR	ﾜｲﾔﾊｰﾈｽ	1	[RWL/BBR/FE][RWL/BBR/TUE]
4	52N51-42401		SWITCH,RWL	ｽｲｯﾁ	1	[RWLR/BBR][RWLL/BBR]
						[RWL2/BBR]
-	52N51-42401		SWITCH,RWL	ｽｲｯﾁ	1	[RWL/BBR/FE][RWL/BBR/TUE]
5	26062-42881		RELAY,12V	ﾘﾚｰ	1	[RWLR/BBR][RWLL/BBR]
						[RWL2/BBR]
-	26062-42881		RELAY,12V	ﾘﾚｰ	1	[RWL/BBR/FE][RWL/BBR/TUE]
6	214A2-42611		SCREW	ｽｸﾘｭ	1	[RWLR/BBR][RWLL/BBR]
						[RWL2/BBR]
-	214A2-42611		SCREW	ｽｸﾘｭ	1	[RWL/BBR/FE][RWL/BBR/TUE]
7	52N51-42411		WIRE-HARNESS,SWITCH	ﾜｲﾔﾊｰﾈｽ	1	[RWLR/BBR][RWLL/BBR]
						[RWL2/BBR]
-	52N51-42411		WIRE-HARNESS,SWITCH	ﾜｲﾔﾊｰﾈｽ	1	[RWL/BBR/FE][RWL/BBR/TUE]
-	52N51-42511		WIRE-HARNESS,SWITCH	ﾜｲﾔﾊｰﾈｽ	1	[RWLR/BBR/PLR][RWLL/BBR/PLR]
						[RWL2/BBR/PLR]

FIG.36 REVOLVING LIGHT [RLY][RLR]

(F7Z324V0) ﾘﾎﾞﾙﾋﾞﾝｸﾞﾗｲﾄ

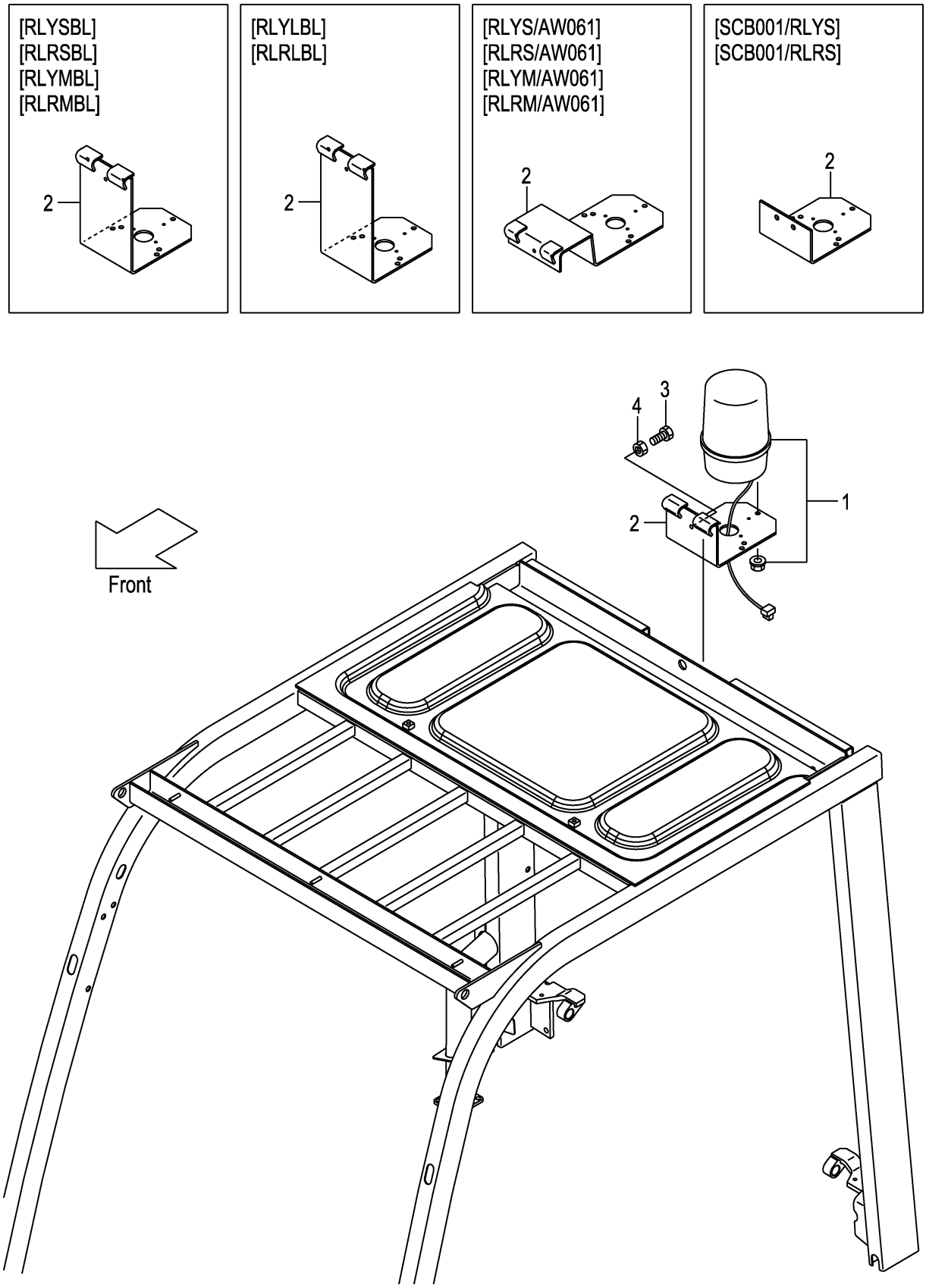

A:FD30C3Z FD30T3Z

Item No	Part No.	Mark	Description		Req'd	Remarks : Serial No.
1	514A1-41001		LIGHT,REVOLVING	ﾗｲﾄ	1	[RLYS][RLYSBL]
-	514A1-41011		LIGHT,REVOLVING	ﾗｲﾄ	1	[RLRS][RLRSBL]
-	514A1-41021		LIGHT,REVOLVING	ﾗｲﾄ	1	[RLYM][RLYMBL]
-	514A1-41031		LIGHT,REVOLVING	ﾗｲﾄ	1	[RLRM][RLRMBL]
-	52N58-92201		LIGHT,REVOLVING	ﾗｲﾄ	1	[RLYL][RLYLBL]
-	52N58-92211		LIGHT,REVOLVING	ﾗｲﾄ	1	[RLRL][RLRLBL]
2	529F1-42251		BRACKET,REVOLVING	ﾌﾞﾗｹｯﾄ	1	[RLYS][RLRS][RLYM][RLRM] [RLYL][RLRL]
-	529F1-42201		BRACKET,REVOLVING	ﾌﾞﾗｹｯﾄ	1	[RLYSBL][RLRSBL][RLYMBL] [RLRMBL]
-	52N58-92251		BRACKET,REVOLVING	ﾌﾞﾗｹｯﾄ	1	[RLYLBL][RLRLBL]
-	539A8-92251		BRACKET,REVOLVING	ﾌﾞﾗｹｯﾄ	1	[RLYS/AW061][RLRS/AW061] [RLYM/AW061][RLRM/AW061]
-	535C8-92051		BRACKET,REVOLVING	ﾌﾞﾗｹｯﾄ	1	[SCB001/RLYS][SCB001/RLRS]
3	01100-08020		BOLT	ﾎﾞﾙﾄ	3	[RLYS][RLYM][RLYL]
-	01100-08020		BOLT	ﾎﾞﾙﾄ	3	[RLRS][RLRM][RLRL]
-	01100-08020		BOLT	ﾎﾞﾙﾄ	3	[RLYSBL][RLRSBL][RLYMBL] [RLRMBL][RLYLBL][RLRLBL]
-	01185-08020		BOLT	ﾎﾞﾙﾄ	2	[SCB001/RLYS][SCB001/RLRS]
4	01400-00008		NUT	ﾅｯﾄ	3	[RLYS][RLYM][RLYL] (WITHOUT SCB001/RLYS)
-	01400-00008		NUT	ﾅｯﾄ	3	[RLRS][RLRM][RLRL] (WITHOUT SCB001/RLRS)
-	01400-00008		NUT	ﾅｯﾄ	3	[RLYSBL][RLRSBL][RLYMBL] [RLRMBL][RLYLBL][RLRLBL]

FIG.37 REVOLVING LIGHT WIRE HARNESS [RLY][RLR]

(F7Z324W0) ﾘﾎﾞﾙﾋﾞﾝｸﾞﾗｲﾄﾜｲﾔﾊｰﾈｽ

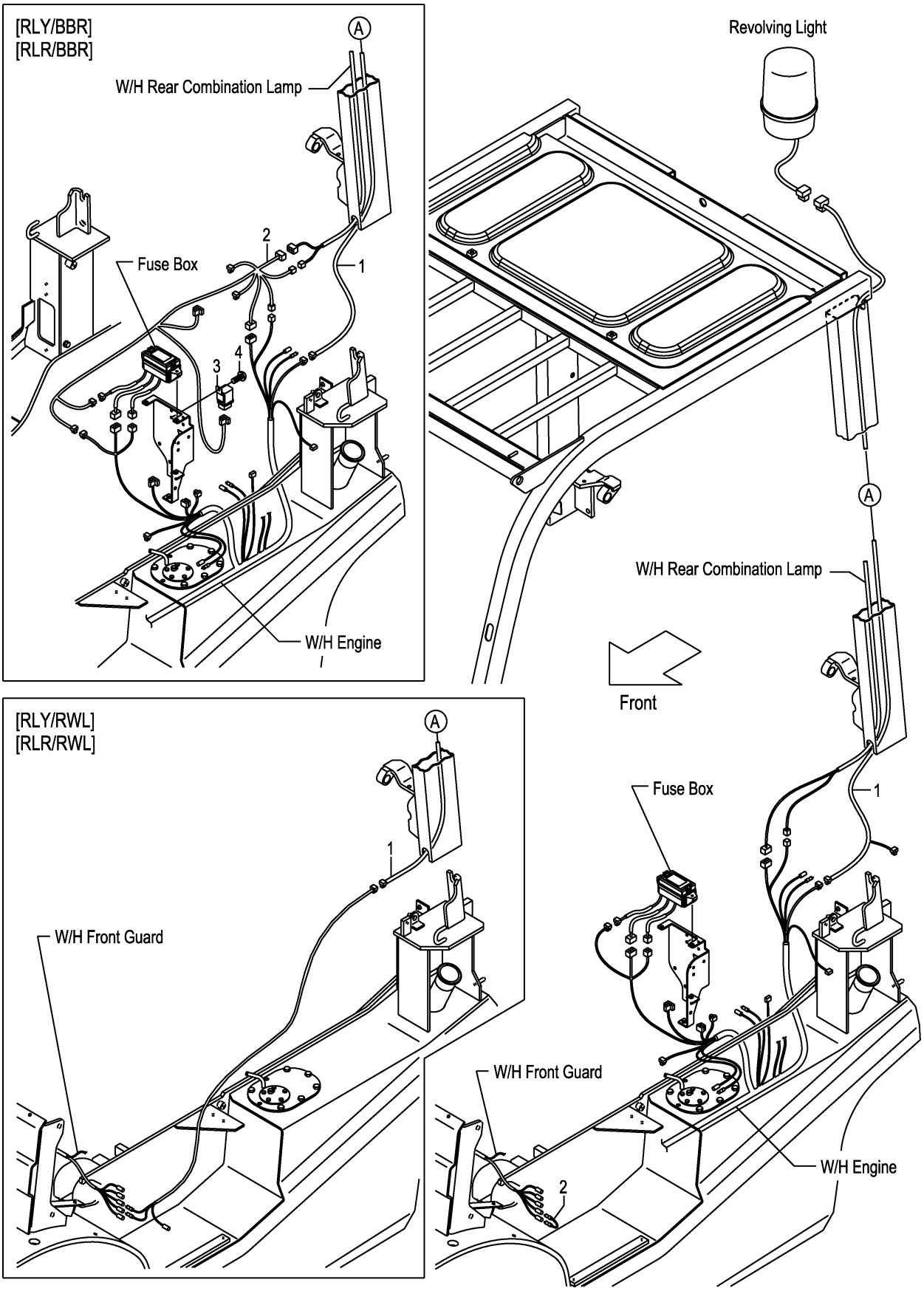

FIG.37

(F7Z324W0)

A:FD30C3Z FD30T3Z

Item No	Part No.	Mark	Description		Req'd	Remarks : Serial No.
1	52N58-92001		WIRE,LEAD	ﾜｲﾔ	1	[RLY][RLR]
-	52N58-92021		WIRE,LEAD	ﾜｲﾔ	1	[RLY/BBR][RLR/BBR][RLY/RWL] [RLR/RWL]
2	516G1-42211		WIRE,LEAD	ﾜｲﾔ	1	[RLY][RLR]
-	52N58-92111		WIRE-HARNESS,BBR	ﾜｲﾔﾊｰﾈｽ	1	[RLY/BBR][RLR/BBR]
-	52N58-92041		WIRE,LEAD	ﾜｲﾔ	1	[RLY/RWL][RLR/RWL]
3	26062-42881		RELAY,12V	ﾘﾚｰ	1	[RLY/BBR][RLR/BBR]
4	214A2-42611		SCREW	ｽｸﾘｭ	1	[RLY/BBR][RLR/BBR]

FIG.38 SPOT LIGHT [SPL]

(F7Z32640) スポットライト

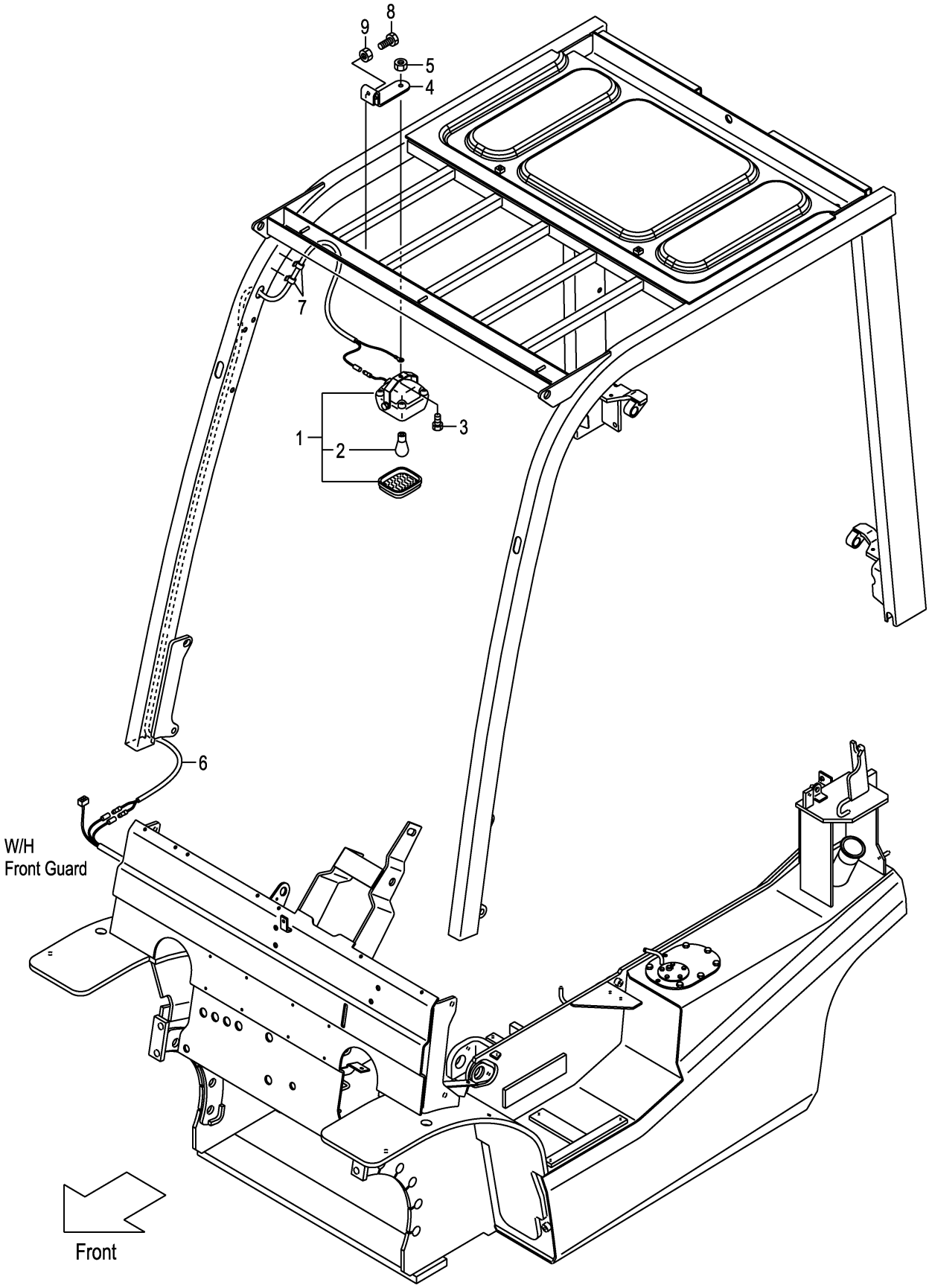

FIG.38

(F7Z32640)

A:FD30C3Z FD30T3Z

Item No	Part No.	Mark	Description		Req'd	Remarks : Serial No.
1	516G9-10101		LAMP	ﾗﾝﾌﾟ	1	[SPL] INC.2
2	516G9-12011		BULB,12V/18.2W	ﾊﾞﾙﾌﾞ	1	[SPL]
3	01185-08016		BOLT	ﾎﾞﾙﾄ	1	[SPL]
4	52N59-02001		BRACKET,SPOT-LAMP	ﾌﾞﾗｹｯﾄ	1	[SPL]
5	01400-00008		NUT	ﾅｯﾄ	1	[SPL]
6	539A9-02011		WIRE-HARNESS,SPOT-L.	ﾜｲﾔﾊｰﾈｽ	1	[SPL]
7	27732-42311		CLAMP,HARNESS	ｸﾗﾝﾌﾟ	2	[SPL]
8	01100-08025		BOLT	ﾎﾞﾙﾄ	2	[SPL]
9	01402-00008		NUT	ﾅｯﾄ	2	[SPL]

FIG.39 BACK BUZZER

(F7Z324X0) ﾊﾞｯｸﾌﾞｻﾞｰ

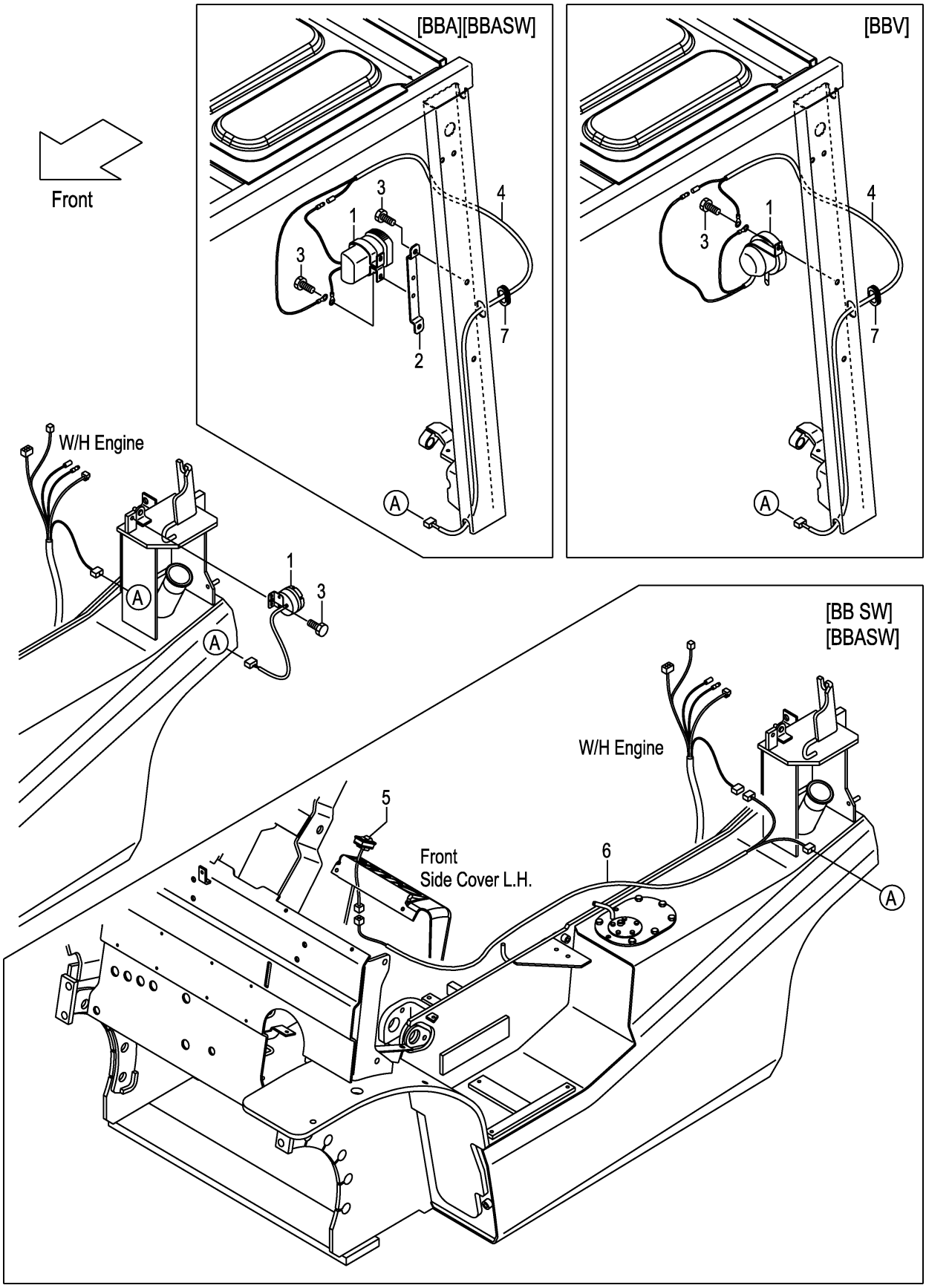

A:FD30C3Z FD30T3Z

Item No	Part No.	Mark	Description		Req'd	Remarks : Serial No.
1	234A2-42301		BUZZER,BACK,12V	ﾌﾞｻﾞｰ	1	
-	214A2-44001		BUZZER,BACK,12V	ﾌﾞｻﾞｰ	1	[BBA][BBASW]
-	52N51-30201		ALARM,VOICE	ｱﾗｰﾑ	1	[BBV]
2	52N51-31001		BRACKET,BBA	ﾌﾞﾗｹｯﾄ	1	[BBA][BBASW]
3	01185-08016		BOLT	ﾎﾞﾙﾄ	1	1-109
-	01183-08012		BOLT	ﾎﾞﾙﾄ	1	110-
-	01183-08016		BOLT	ﾎﾞﾙﾄ	4	[BBA][BBASW]
-	01183-08016		BOLT	ﾎﾞﾙﾄ	1	[BBV]
4	52N51-32011		WIRE,LEAD,BBA	ﾜｲﾔ	1	[BBA][BBASW][BBV]
5	52N51-32101		SWITCH,ON/OFF	ｽｲｯﾁ	1	[BB SW][BBASW]
6	52N51-32001		WIRE,LEAD,BBSW	ﾜｲﾔ	1	[BB SW][BBASW]
7	54315-32561		GROMMET	ｸﾞﾛﾒｯﾄ	1	110-
						[BBA][BBASW][BBV]

FIG.40 FAN [FAN]

(F7Z32650) ファン

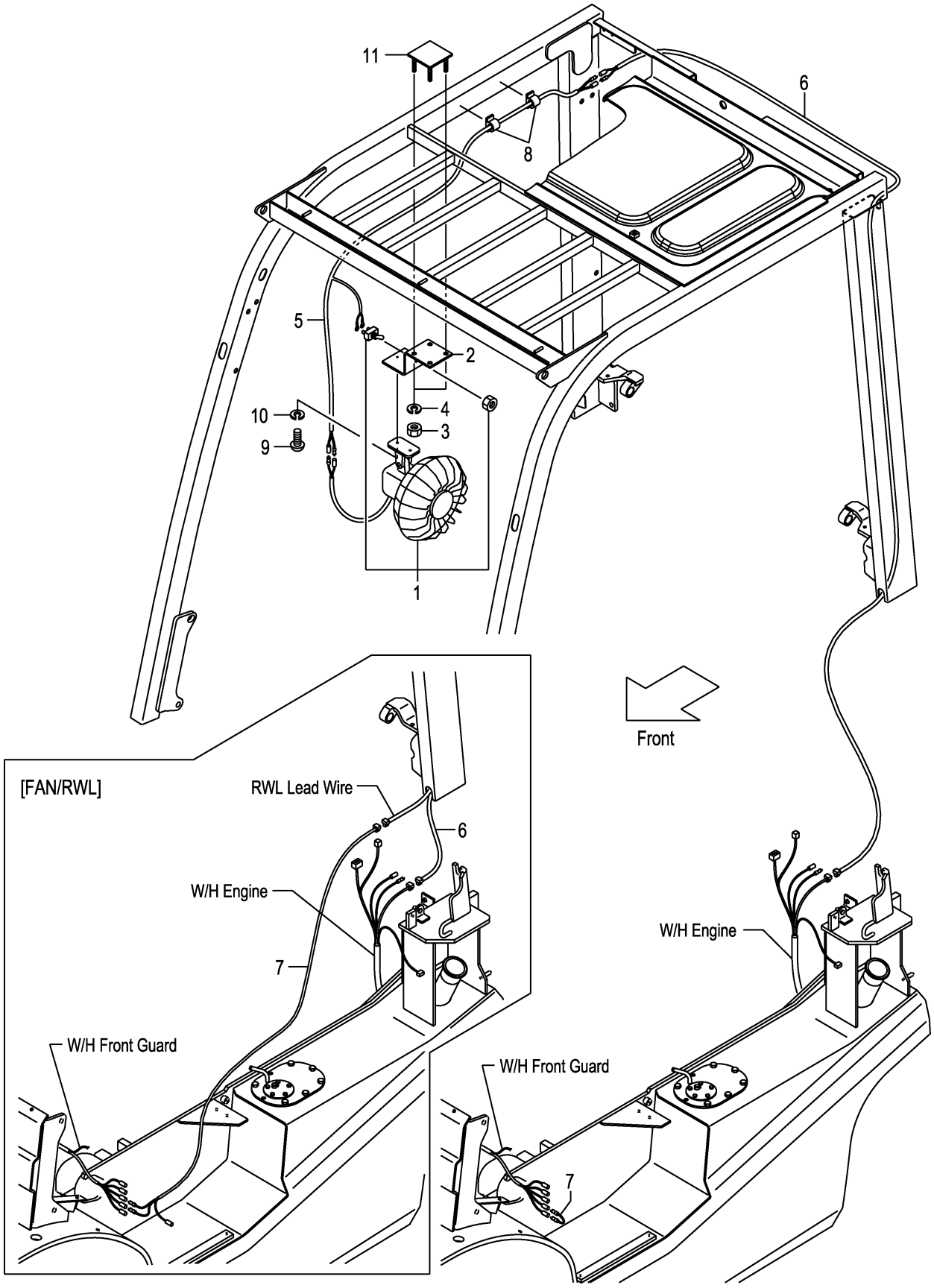

FIG.40

(F7Z32650)

A:FD30C3Z FD30T3Z

Item No	Part No.	Mark	Description		Req'd	Remarks : Serial No.
1	514A5-32341		FAN,CAR	ﾌｧﾝ	1	[FAN]
2	52N58-22001		BRACKET,FAN	ﾌﾞﾗｹｯﾄ	1	[FAN](WITHOUT FAN/SCB001)
3	01400-00008		NUT	ﾅｯﾄ	4	[FAN](WITHOUT FAN/SCB001)
4	02010-00008		WASHER	ﾜｯｼｬ	4	[FAN](WITHOUT FAN/SCB001)
5	539A8-22151		WIRE-HARNESS,FAN	ﾜｲﾔﾊｰﾈｽ	1	[FAN](WITHOUT FAN/SCB001)
6	516G1-42111		WIRE,LEAD	ﾜｲﾔ	1	[FAN](WITHOUT FAN/SCB001)
7	516G1-42211		WIRE,LEAD	ﾜｲﾔ	1	[FAN](WITHOUT FAN/SCB001)
-	514A1-42041		WIRE,LEAD	ﾜｲﾔ	1	[FAN/RWL]
8	27732-42311		CLAMP,HARNESS	ｸﾗﾝﾌﾟ	4	[FAN](WITHOUT FAN/SCB001)
9	01030-04014		SCREW	ｽｸﾘｭ	2	[FAN]
-	01044-04014		SCREW	ｽｸﾘｭ	2	[FAN/SCB001]
10	02010-00004		WASHER	ﾜｯｼｬ	2	[FAN](WITHOUT FAN/SCB001)
11	52N58-22101		BRACKET,FAN	ﾌﾞﾗｹｯﾄ	1	[FAN](WITHOUT FAN/SCB001)
12	209K2-42351	+	RELAY,1A	ﾘﾚｰ	1	[FAN/SCB001]

FIG.41 LIFT LOCK VALVE WIRE HARNESS [VLL]

(F7Z32660) ﾘﾌﾄﾛｯｸﾊﾞﾙﾌﾞﾜｲﾔﾊｰﾈｽ

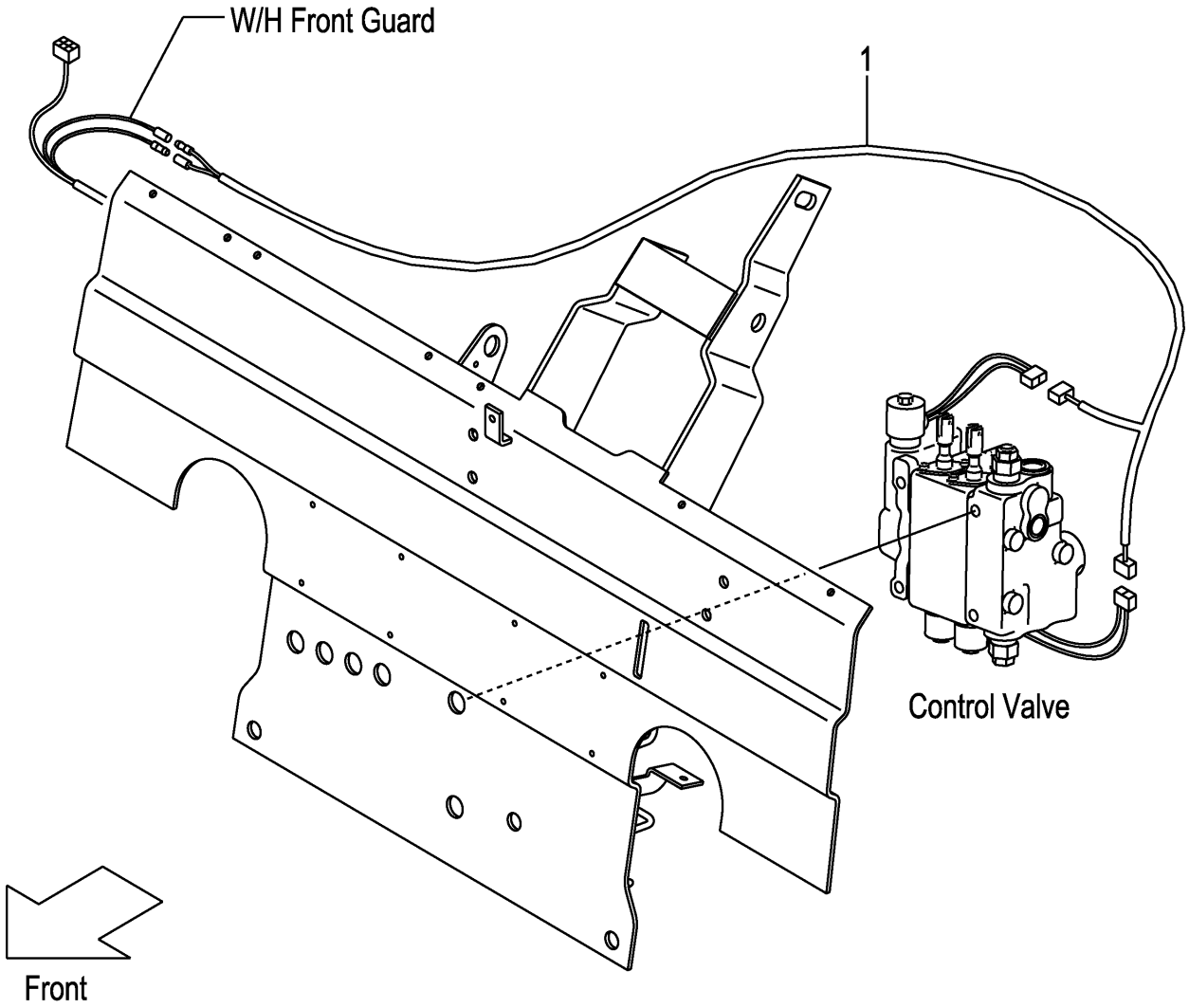

FIG.41

(F7Z32660)

A:FD30C3Z FD30T3Z

Item No	Part No.	Mark	Description	Req'd	Remarks : Serial No.
1	52N56-72001		WIRE-HARNESS,VLL ﾜｲﾔﾊｰﾈｽ	1	[VLL](WITHOUT VLL/SIL)

FIG.42 AMMETER [AM]

(F7Z326A0) アンメータ

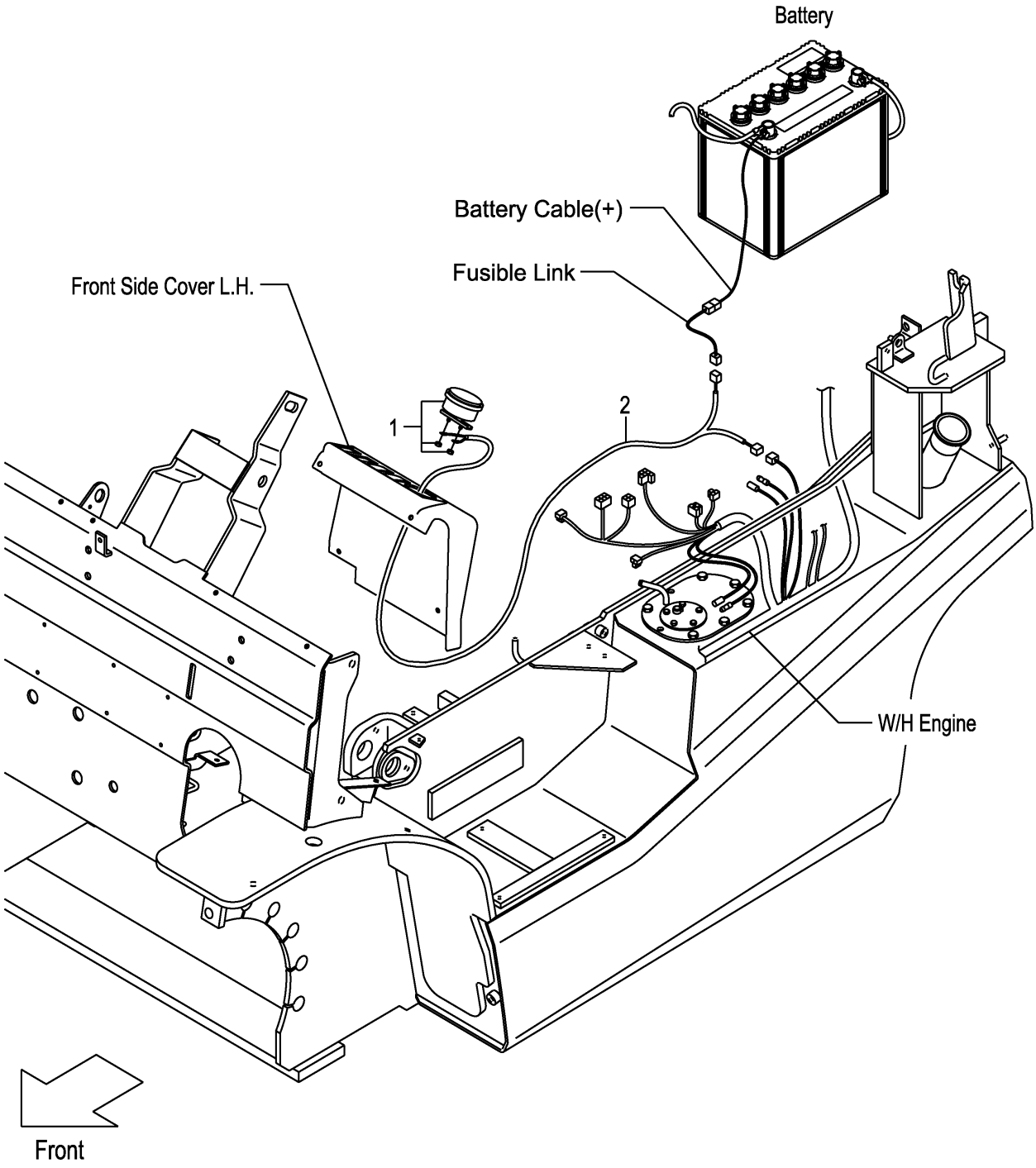

FIG.42

(F7Z326A0)

A:FD30C3Z FD30T3Z

Item No	Part No.	Mark	Description	Req'd	Remarks : Serial No.
1	3956323		AMMETER,50A ｱﾝﾒｰﾀ	1	[AM]
2	52N56-12051		WIRE,LEAD,AMMETER ﾜｲﾔ	1	[AM]

FIG.43 SPEED METER [SM]

(F7Z326B0) ｽﾋﾟｰﾄﾞﾒｰﾀ

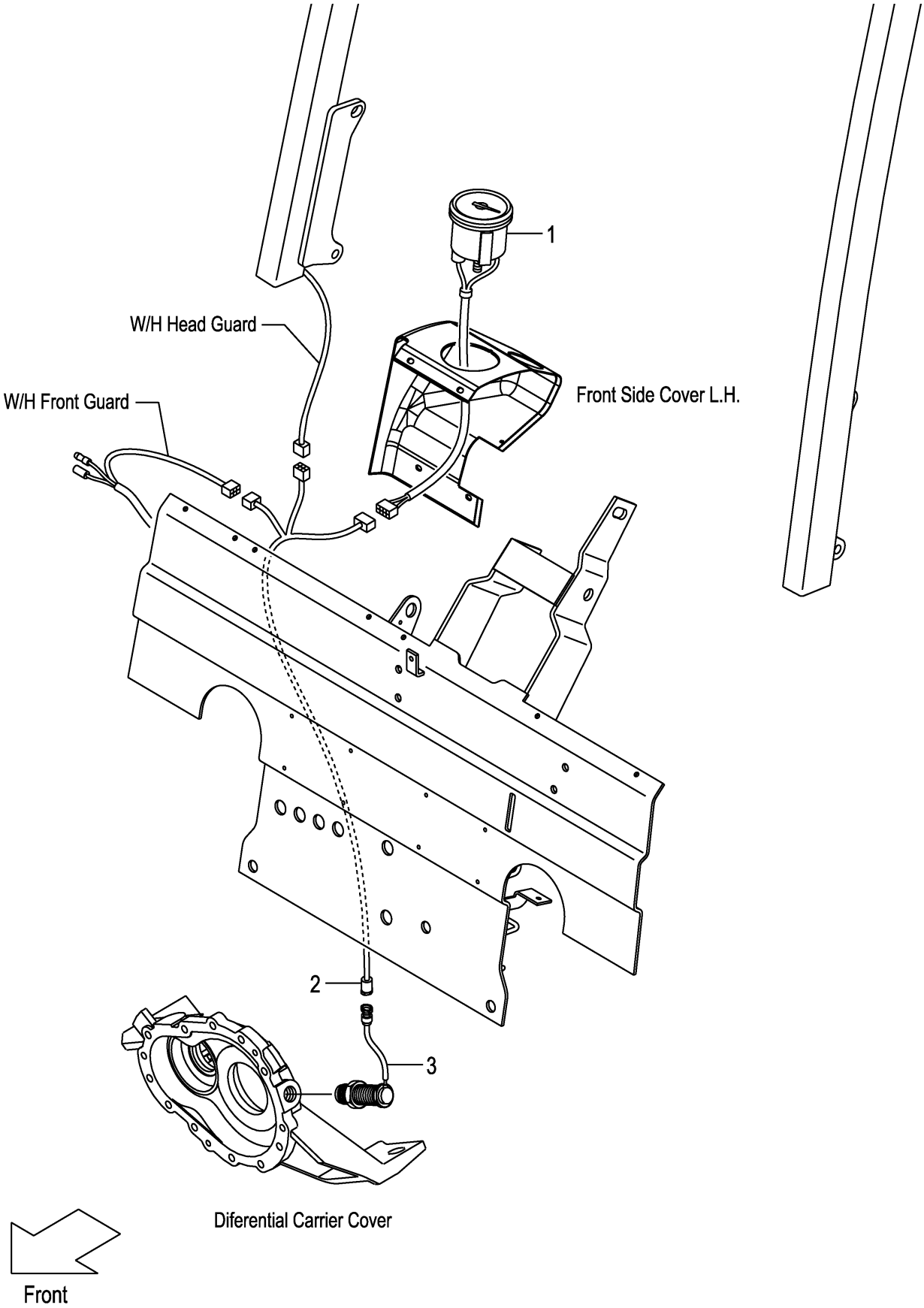

FIG.43

(F7Z326B0)

A:FD30C3Z FD30T3Z

Item No	Part No.	Mark	Description		Req'd	Remarks : Serial No.
1	52N57-50101		METER,SPEED	ﾒｰﾀ	1	[SM]
2	52N57-50301		WIRE-HARNESS,SM	ﾜｲﾔﾊｰﾈｽ	1	[SM]
3	16402-54331		SENSOR	ｾﾝｻ	1	[SM]

FIG.44 TORQUE CONVERTER THERMOMETER [TTM]

(F7Z326C0) トルクコンバータサーモメータ

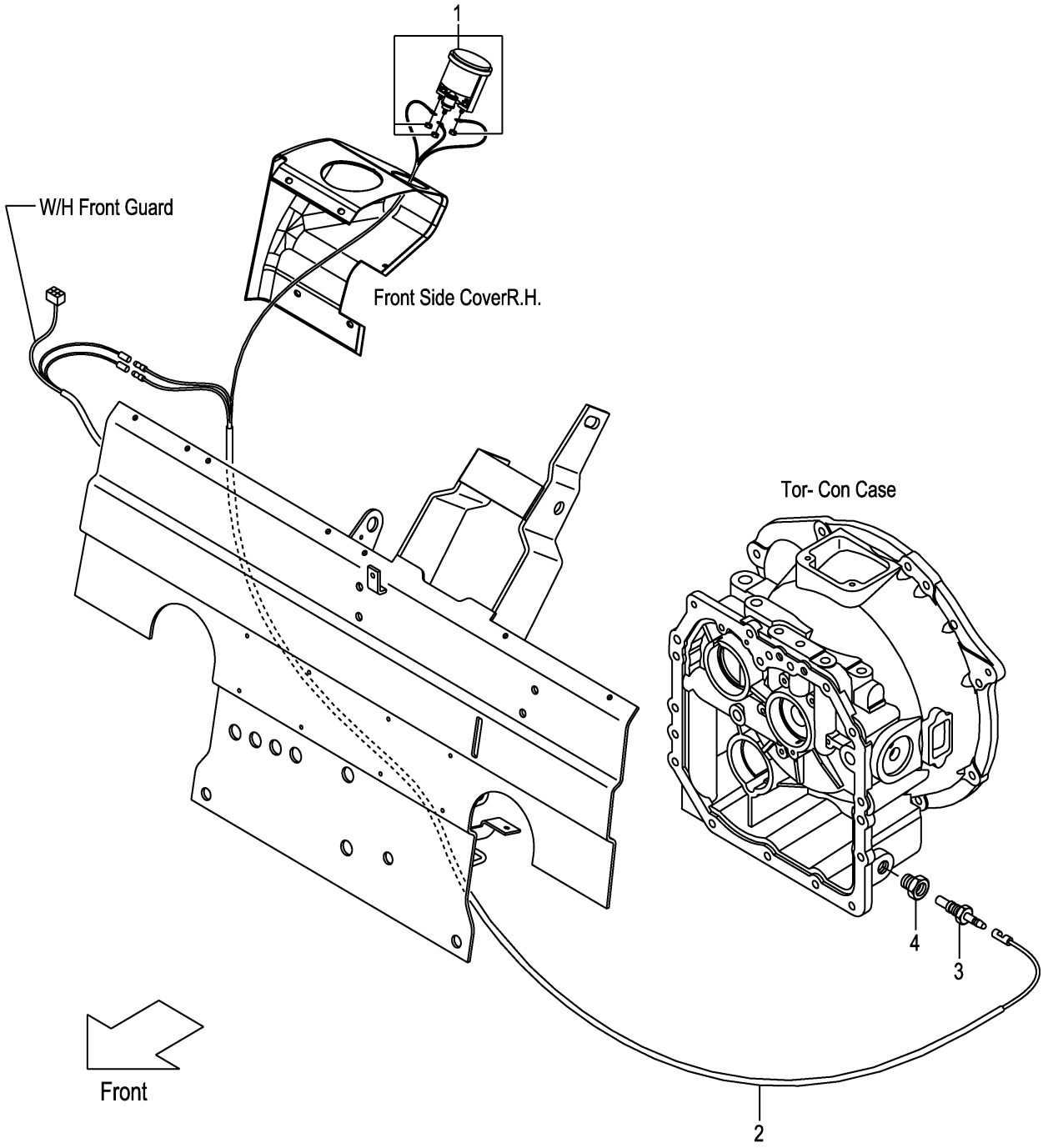

FIG.44
(F7Z326C0)

A:FD30T3Z

Item No	Part No.	Mark	Description		Req'd	Remarks : Serial No.
1	52N58-82001		THERMOMETER	ｻｰﾓﾒｰﾀ	1	[TTM]
2	52N58-82101		WIRE-HARNESS,TTM	ﾜｲﾔﾊｰﾈｽ	1	[TTM]
3	23652-44001		UNIT,SENDING	ﾕﾆｯﾄ	1	[TTM]
4	521A2-42061		ADAPTER,THERMO-SW.	ｱﾀﾞﾌﾟﾀ	1	[TTM]

FIG.45 TORQUE CONVERTER PRESSURE METER [TPM]

(F7Z326D0) トルクコンバータプレッシャメータ

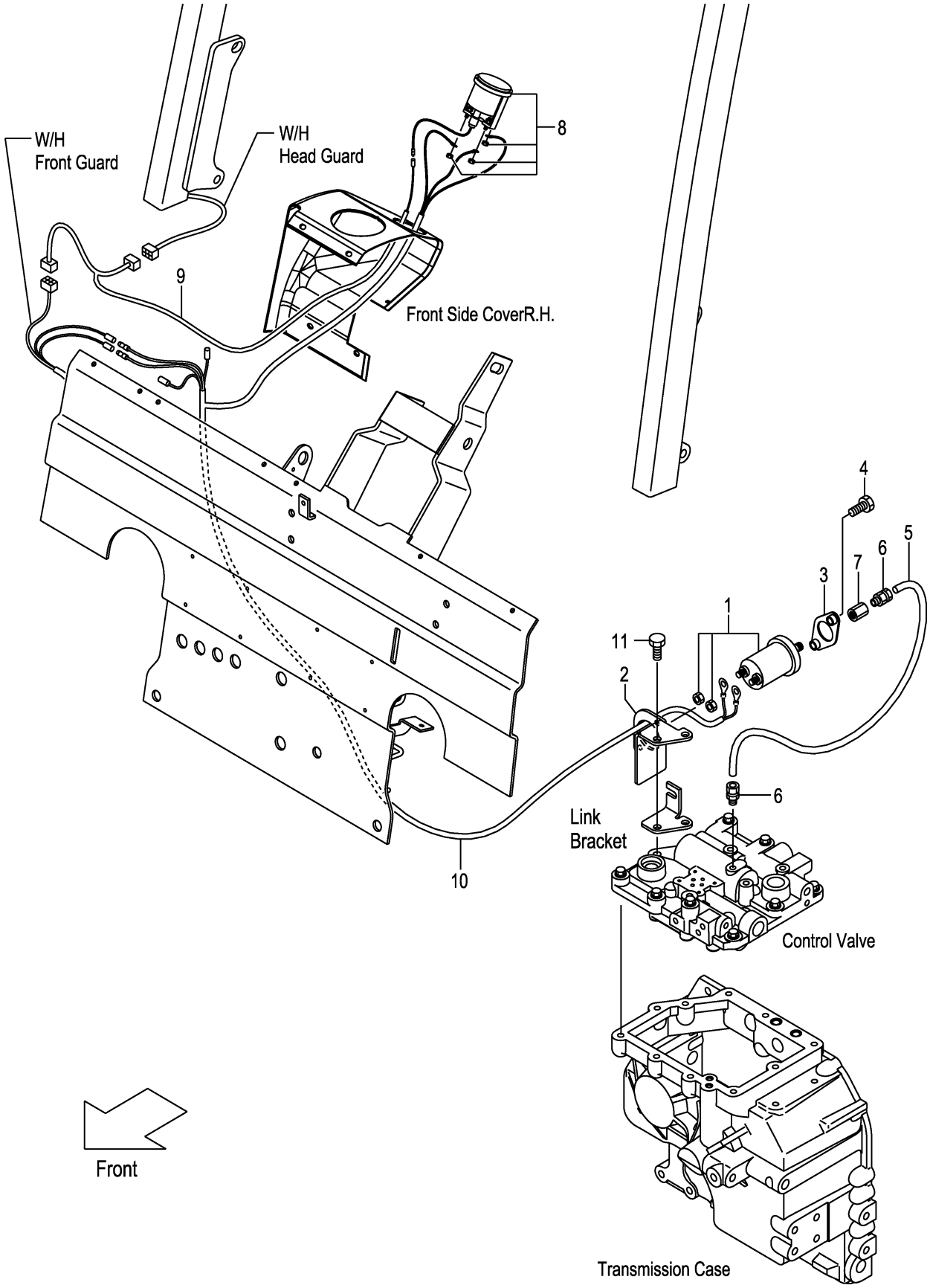

FIG.45
(F7Z326D0)

A:FD30T3Z

Item No	Part No.	Mark	Description		Req'd	Remarks : Serial No.
1	516G6-92001		SENSOR,PRESS.GAUGE	ｾﾝｻ	1	[TPM]
2	52N56-92101		BRACKET,SENSOR	ﾌﾞﾗｹｯﾄ	1	[TPM]
3	516G6-92151		COVER,SENSOR	ｶﾊﾞｰ	1	[TPM]
4	01186-08025		BOLT	ﾎﾞﾙﾄ	2	[TPM]
5	52N56-92001		PIPE,CAPPER	ﾊﾟｲﾌﾟ	1	[TPM]
6	516G6-92011		JOINT	ｼﾞｮｲﾝﾄ	2	[TPM]
7	516G6-92031		ADAPTER	ｱﾀﾞﾌﾟﾀ	1	[TPM]
8	516G6-92022		GAUGE,PRESSURE	ｹﾞｰｼﾞ	1	[TPM]
9	52N56-92211		WIRE-HARNESS	ﾜｲﾔﾊｰﾈｽ	1	[TPM]
10	52N56-92201		WIRE-HARNESS,TPM	ﾜｲﾔﾊｰﾈｽ	1	[TPM]
11	01103-10035		BOLT	ﾎﾞﾙﾄ	2	[TPM]

FIG.46 SPEED DETECTOR UNIT [SAS]

(F7Z326E0) ｽﾋﾟｰﾄﾞﾃﾞｨﾃｸﾀﾕﾆｯﾄ

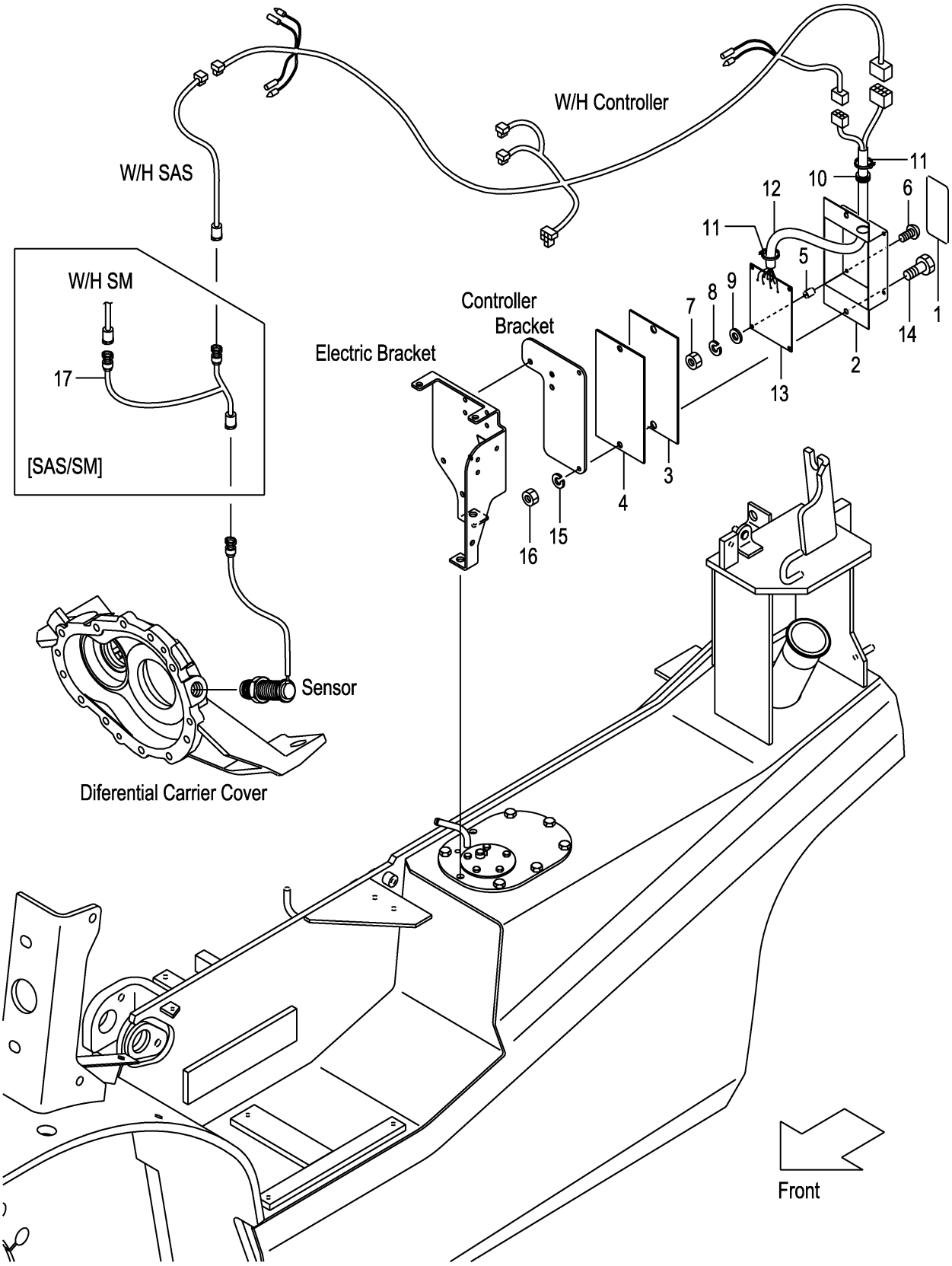

A:FD30C3Z FD30T3Z

Item No	Part No.	Mark	Description		Req'd	Remarks : Serial No.
A1	52N57-52051		UNIT-ASSY,SPEED-DETECTOR	ﾃﾞｨﾃｸﾀﾕﾆｯﾄｱｯｾﾝ	1	[SASB05][SASR05][SASC05] INC.1-16
-	52N57-52101		UNIT-ASSY,SPEED-DETECTOR	ﾃﾞｨﾃｸﾀﾕﾆｯﾄｱｯｾﾝ	1	[SASB10][SASR10][SASC10] INC.1-16
-	52N57-52151		UNIT-ASSY,SPEED-DETECTOR	ﾃﾞｨﾃｸﾀﾕﾆｯﾄｱｯｾﾝ	1	[SASB15][SASR15][SASC15] INC.1-16
1	52N57-52061		PLATE,NAME	ﾌﾟﾚｰﾄ	1	[SASB05][SASR05][SASC05]
-	52N57-52111		PLATE,NAME	ﾌﾟﾚｰﾄ	1	[SASB10][SASR10][SASC10]
-	52N57-52161		PLATE,NAME	ﾌﾟﾚｰﾄ	1	[SASB15][SASR15][SASC15]
2	55792-52601		CASE	ｹｰｽ	1	[SASB05&10&15][SASR05&10&15] [SASC05&10&15]
3	55792-52611		SEAT,SPONG	ｼｰﾄ	1	[SASB05&10&15][SASR05&10&15] [SASC05&10&15]
4	55792-52621		PLATE	ﾌﾟﾚｰﾄ	1	[SASB05&10&15][SASR05&10&15] [SASC05&10&15]
5	27042-64311		SPACER	ｽﾍﾟｰｻ	4	[SASB05&10&15][SASR05&10&15] [SASC05&10&15]
6	01030-04020		SCREW	ｽｸﾘｭ	4	[SASB05&10&15][SASR05&10&15] [SASC05&10&15]
7	01400-00004		NUT	ﾅｯﾄ	4	[SASB05&10&15][SASR05&10&15] [SASC05&10&15]
8	02010-00004		WASHER	ﾜｯｼｬ	4	[SASB05&10&15][SASR05&10&15] [SASC05&10&15]
9	02000-00004		WASHER	ﾜｯｼｬ	4	[SASB05&10&15][SASR05&10&15] [SASC05&10&15]
10	205A2-63311		GROMMET	ｸﾞﾛﾒｯﾄ	1	[SASB05&10&15][SASR05&10&15] [SASC05&10&15]
11	27042-42312		BAND,CABLE	ﾊﾞﾝﾄﾞ	2	[SASB05&10&15][SASR05&10&15] [SASC05&10&15]
12	55792-52641		WIRE-HARNESS,ATC	ﾜｲﾔﾊｰﾈｽ	1	[SASB05&10&15][SASR05&10&15] [SASC05&10&15]
13	130C2-60302		BOARD,PRINTED	ﾎﾞｰﾄﾞ	1	[SASB05&10&15][SASR05&10&15] [SASC05&10&15]
14	01100-06020		BOLT	ﾎﾞﾙﾄ	2	[SASB05&10&15][SASR05&10&15] [SASC05&10&15]
15	02010-00006		WASHER	ﾜｯｼｬ	2	[SASB05&10&15][SASR05&10&15] [SASC05&10&15]
16	01400-00006		NUT	ﾅｯﾄ	2	[SASB05&10&15][SASR05&10&15] [SASC05&10&15]
17	539A7-52041		WIRE-HARNESS,SAS/SM	ﾜｲﾔﾊｰﾈｽ	1	[SAS/SM]

FIG.47 SPEED ALARM SYSTEM [SASB]

(F7Z326F0) ｽﾋﾟｰﾄﾞｱﾗｰﾑｼｽﾃﾑ

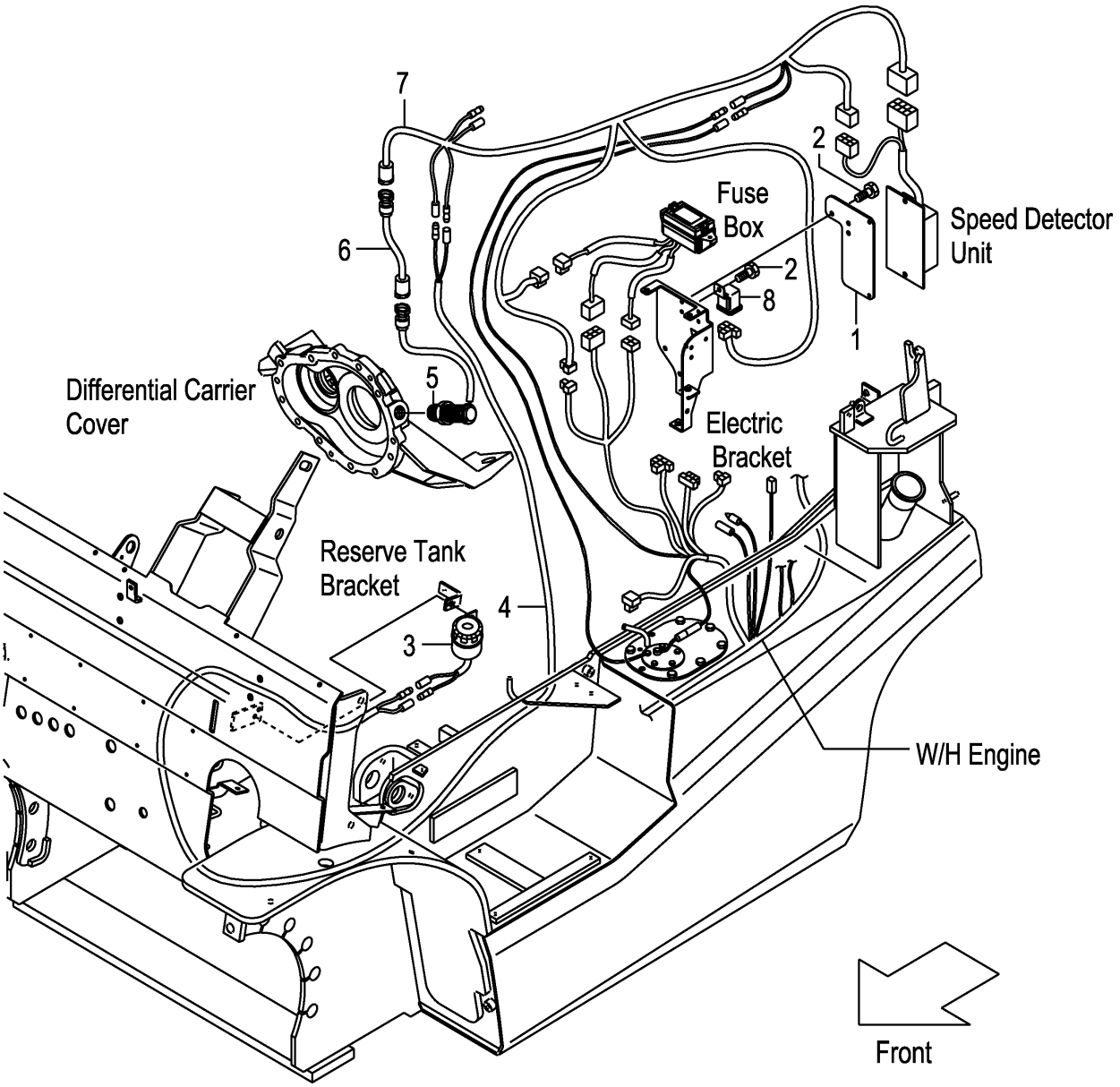

FIG.47

(F7Z326F0)

A:FD30C3Z FD30T3Z

Item No	Part No.	Mark	Description		Req'd	Remarks : Serial No.
1	52N57-52001		BRACKET,CONTROLLER	ﾌﾞﾗｹｯﾄ	1	[SASB05][SASB10][SASB15]
2	214A2-42621		SCREW	ｽｸﾘｭ	4	[SASB05][SASB10][SASB15]
3	529F7-52241		ALARM,BUZZER	ｱﾗｰﾑ	1	[SASB05][SASB10][SASB15]
4	558A9-92001		WIRE-HARNESS,LICENSE	ﾜｲﾔﾊｰﾈｽ	1	[SASB05][SASB10][SASB15]
5	16402-54331		SENSOR	ｾﾝｻ	1	[SASB05][SASB10][SASB15]
6	534A7-50601		WIRE-HARNESS,SAS	ﾜｲﾔﾊｰﾈｽ	1	[SASB05][SASB10][SASB15]
7	52N57-52031		WIRE-HARNESS,CONTROL	ﾜｲﾔﾊｰﾈｽ	1	[SASB05][SASB10][SASB15]
8	26062-42881		RELAY,12V	ﾘﾚｰ	1	[SASB05][SASB10][SASB15]

FIG.48 SPEED ALARM SYSTEM [SASR]

(F7Z326G0) ｽﾋﾟｰﾄﾞｱﾗｰﾑｼｽﾃﾑ

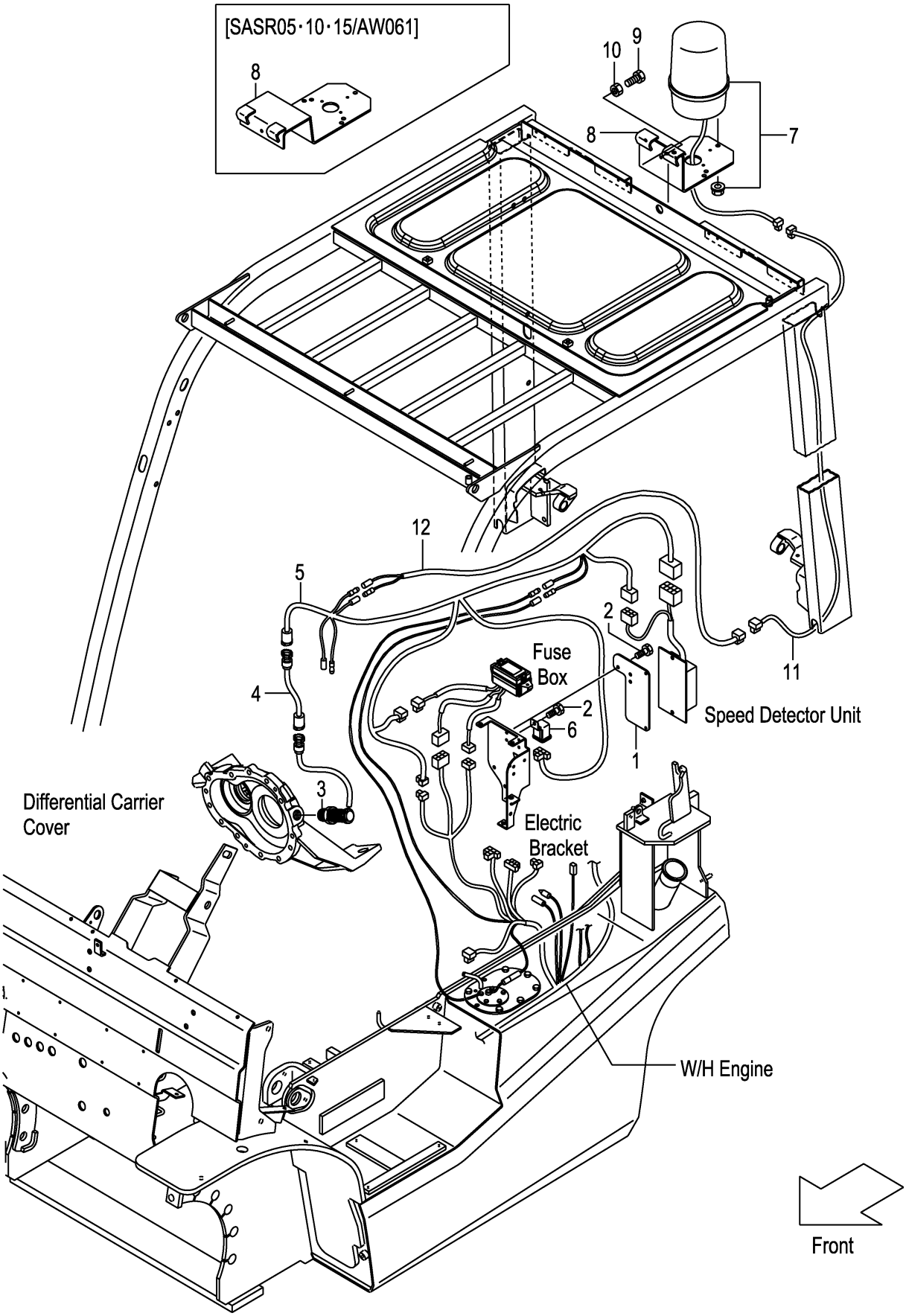

FIG.48
(F7Z326G0)

A:FD30C3Z FD30T3Z

Item No	Part No.	Mark	Description		Req'd	Remarks : Serial No.
1	52N57-52001		BRACKET,CONTROLLER	ﾌﾞﾗｹｯﾄ	1	[SASR05][SASR10][SASR15]
2	214A2-42621		SCREW	ｽｸﾘｭ	4	[SASR05][SASR10][SASR15]
3	16402-54331		SENSOR	ｾﾝｻ	1	[SASR05][SASR10][SASR15]
4	534A7-50601		WIRE-HARNESS,SAS	ﾜｲﾔﾊｰﾈｽ	1	[SASR05][SASR10][SASR15]
5	52N57-52031		WIRE-HARNESS,CONTROL	ﾜｲﾔﾊｰﾈｽ	1	[SASR05][SASR10][SASR15]
6	26062-42881		RELAY,12V	ﾘﾚｰ	1	[SASR05][SASR10][SASR15]
7	514A1-41001		LIGHT,REVOLVING	ﾗｲﾄ	1	[SASR05][SASR10][SASR15]
8	529F1-42251		BRACKET,REVOLVING	ﾌﾞﾗｹｯﾄ	1	[SASR05][SASR10][SASR15]
-	539A8-92251		BRACKET,REVOLVING	ﾌﾞﾗｹｯﾄ	1	[SASR05/AW061][SASR10/AW061] [SASR15/AW061]
9	01100-08020		BOLT	ﾎﾞﾙﾄ	3	[SASR05][SASR10][SASR15]
10	01400-00008		NUT	ﾅｯﾄ	3	[SASR05][SASR10][SASR15]
11	52N58-92021		WIRE,LEAD	ﾜｲﾔ	1	[SASR05][SASR10][SASR15]
12	539A7-52101		WIRE,LEAD	ﾜｲﾔ	1	[SASR05][SASR10][SASR15]

FIG.49 SPEED ALARM SYSTEM [SASC]

(F7Z326H0) スピードアラームシステム

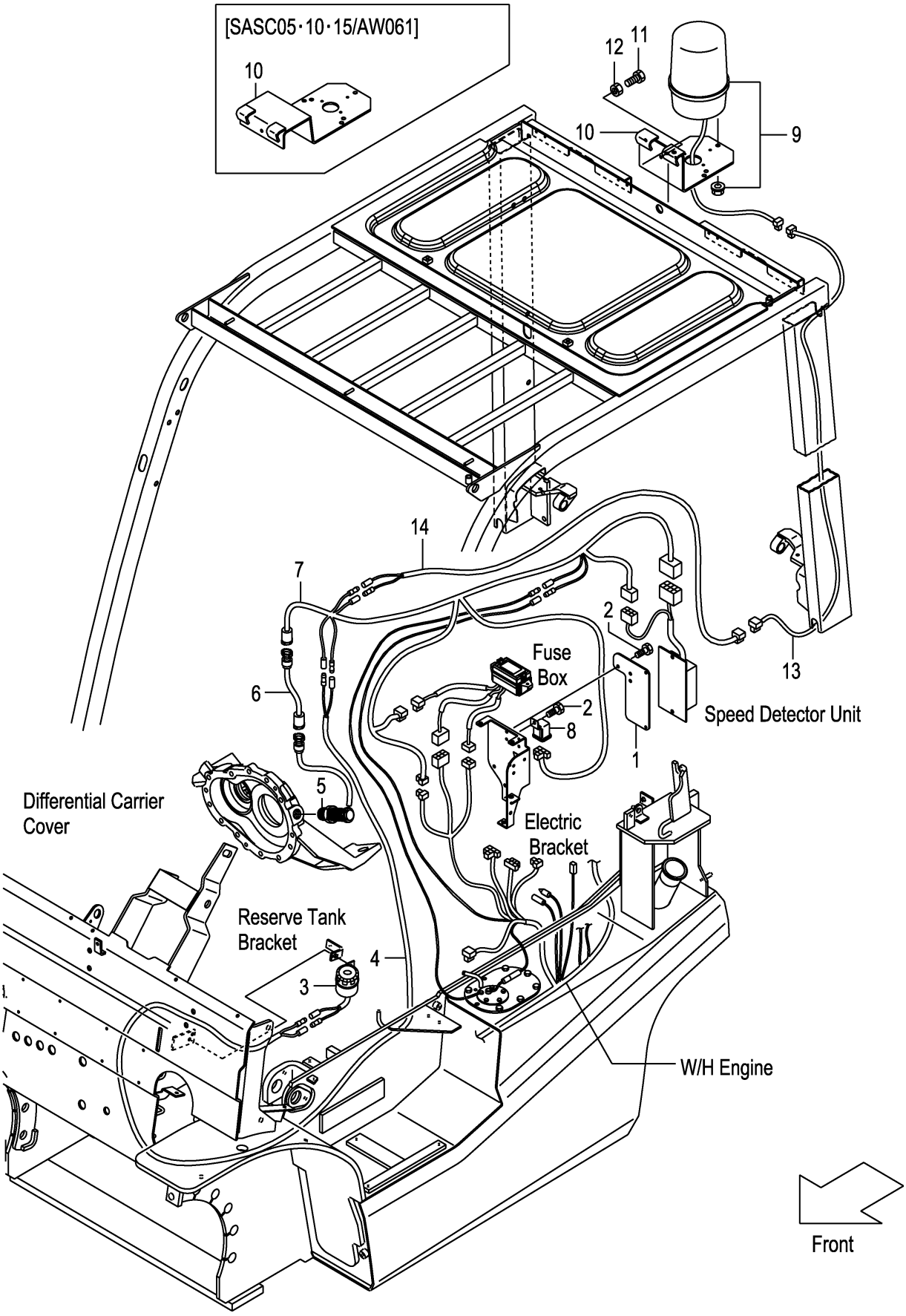

FIG.49
(F7Z326H0)

A:FD30C3Z FD30T3Z

Item No	Part No.	Mark	Description		Req'd	Remarks : Serial No.
1	52N57-52001		BRACKET,CONTROLLER	ﾌﾞﾗｹｯﾄ	1	[SASC05][SASC10][SASC15]
2	214A2-42621		SCREW	ｽｸﾘｭ	4	[SASC05][SASC10][SASC15]
3	529F7-52241		ALARM,BUZZER	ｱﾗｰﾑ	1	[SASC05][SASC10][SASC15]
4	558A9-92001		WIRE-HARNESS,LICENSE	ﾜｲﾔﾊｰﾈｽ	1	[SASC05][SASC10][SASC15]
5	16402-54331		SENSOR	ｾﾝｻ	1	[SASC05][SASC10][SASC15]
6	534A7-50601		WIRE-HARNESS,SAS	ﾜｲﾔﾊｰﾈｽ	1	[SASC05][SASC10][SASC15]
7	52N57-52031		WIRE-HARNESS,CONTROL	ﾜｲﾔﾊｰﾈｽ	1	[SASC05][SASC10][SASC15]
8	26062-42881		RELAY,12V	ﾘﾚｰ	1	[SASC05][SASC10][SASC15]
9	514A1-41001		LIGHT,REVOLVING	ﾗｲﾄ	1	[SASC05][SASC10][SASC15]
10	529F1-42251		BRACKET,REVOLVING	ﾌﾞﾗｹｯﾄ	1	[SASC05][SASC10][SASC15]
-	539A8-92251		BRACKET,REVOLVING	ﾌﾞﾗｹｯﾄ	1	[SASC05/AW061][SASC10/AW061] [SASC15/AW061]
11	01100-08020		BOLT	ﾎﾞﾙﾄ	3	[SASC05][SASC10][SASC15]
12	01400-00008		NUT	ﾅｯﾄ	3	[SASC05][SASC10][SASC15]
13	52N58-92021		WIRE,LEAD	ﾜｲﾔ	1	[SASC05][SASC10][SASC15]
14	539A7-52101		WIRE,LEAD	ﾜｲﾔ	1	[SASC05][SASC10][SASC15]

FIG.50 OK MONITOR [OKM]

(F7Z326J0) **OKモニタ**

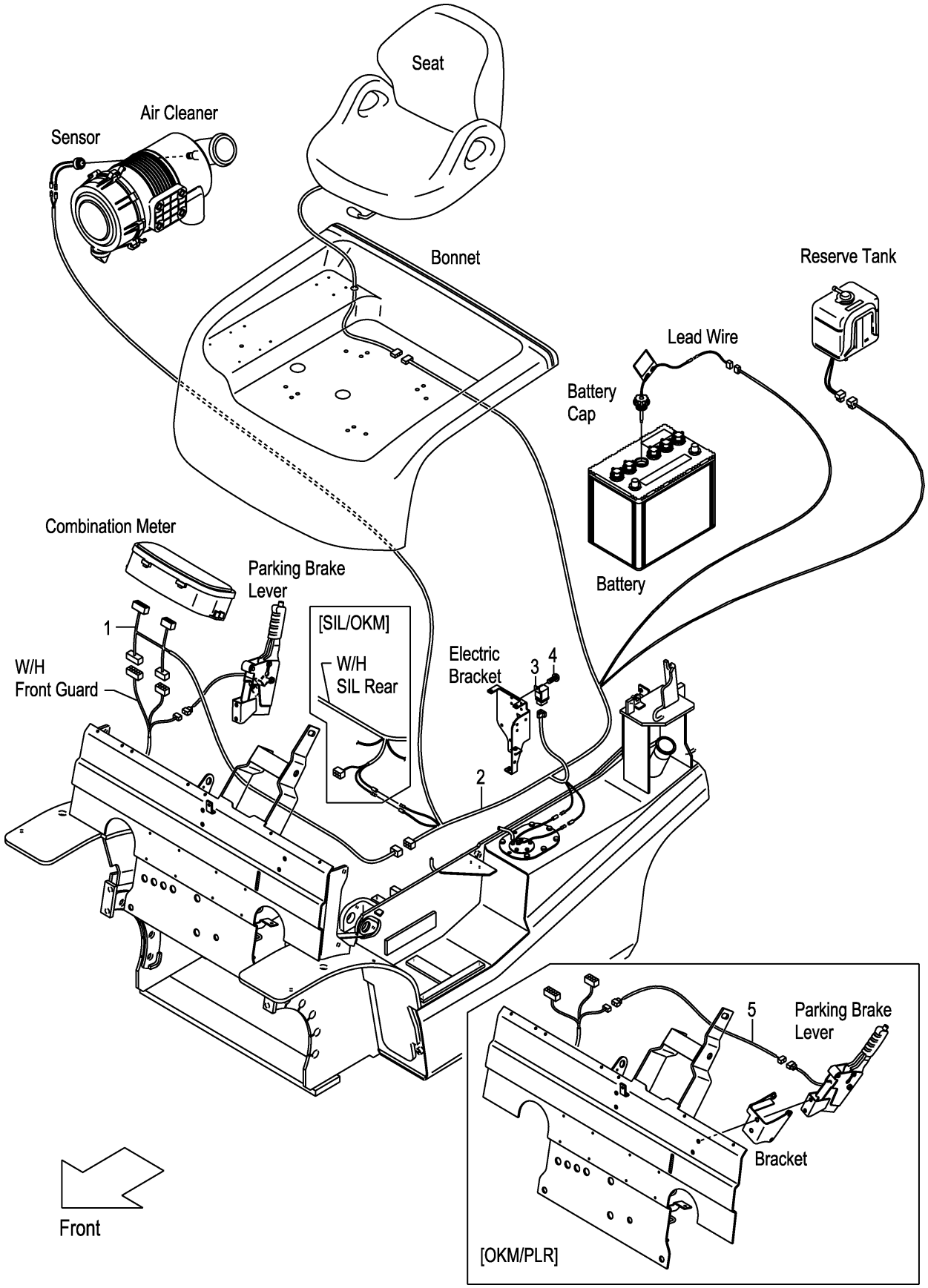

FIG.50

(F7Z326J0)

A:FD30C3Z FD30T3Z

Item No	Part No.	Mark	Description		Req'd	Remarks : Serial No.
1	52N56-22021		WIRE,LEAD,OKM	ﾜｲﾔ	1	[OKM]
2	52N56-22011		WIRE-HARNESS,OKM	ﾜｲﾔﾊｰﾈｽ	1	[OKM]
3	26062-42881		RELAY,12V	ﾘﾚｰ	1	[OKM]
4	214A2-42611		SCREW	ｽｸﾘｭ	1	[OKM]
5	52N56-22401		WIRE-HARNESS,SWITCH	ﾜｲﾔﾊｰﾈｽ	1	[OKM/PLR]

FIG.51 INTERLOCK (CLUTCH):[SIL]

(F7Z326M0) インターロック

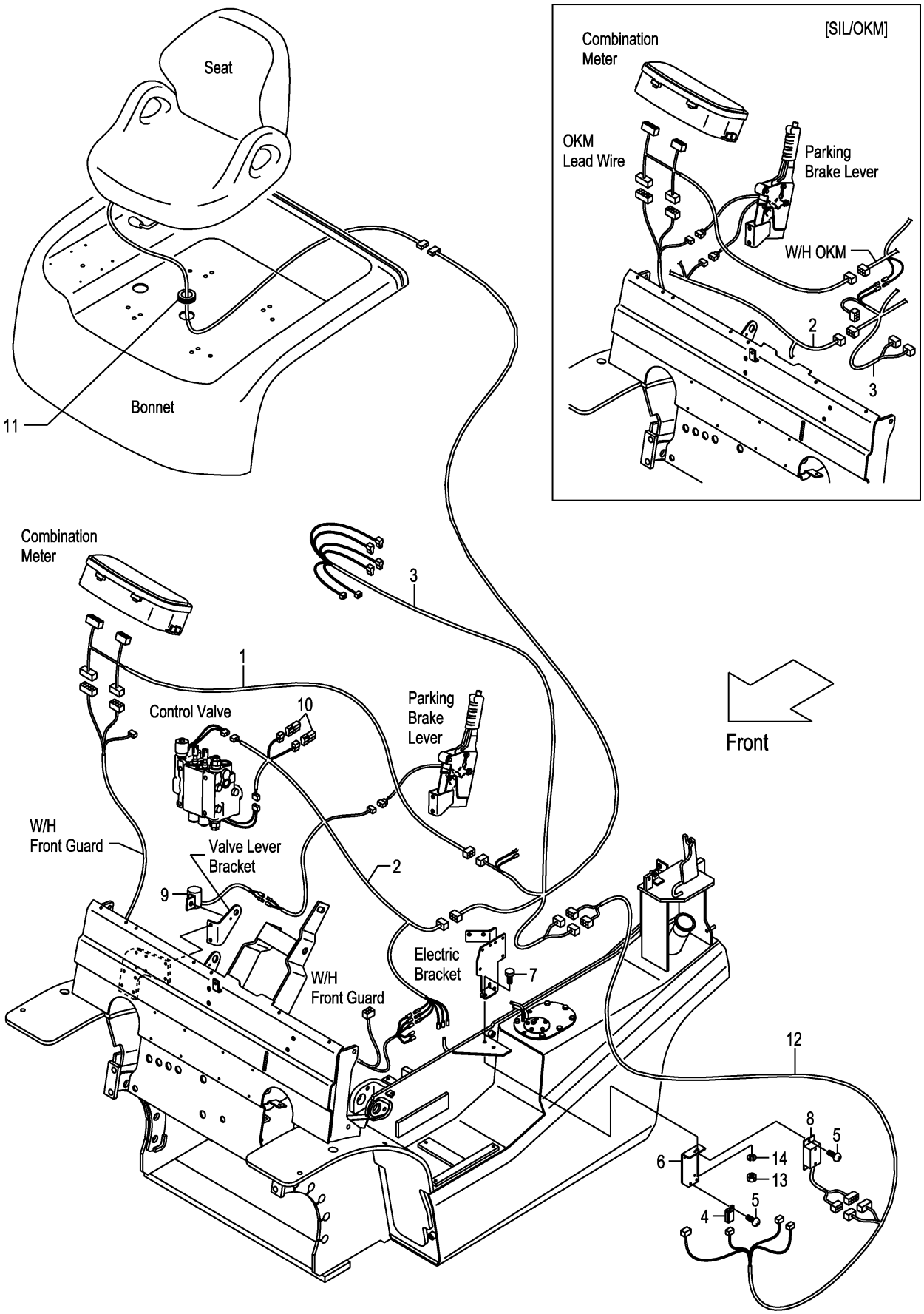

FIG.51

(F7Z326M0)

A:FD30C3Z

Item No	Part No.	Mark	Description		Req'd	Remarks : Serial No.
1	52N56-22021		WIRE,LEAD,OKM	ﾜｲﾔ	1	[SIL](WITHOUT SIL/OKM)
2	52N57-E2001		WIRE-HARNESS,SIL,F	ﾜｲﾔﾊｰﾈｽ	1	[SIL]
3	52N57-E2011		WIRE-HARNESS,SIL,R	ﾜｲﾔﾊｰﾈｽ	1	[SIL]
4	209K2-42351		RELAY,1A	ﾘﾚｰ	1	[SIL]
5	214A2-42611		SCREW	ｽｸﾘｭ	3	[SIL]
6	52N57-E2201		BRACKET,RELAY	ﾌﾞﾗｹｯﾄ	1	[SIL]
7	01185-08025		BOLT	ﾎﾞﾙﾄ	1	[SIL]
8	247C2-43301		TIMER	ﾀｲﾏｰ	1	[SIL]
9	247C2-43601		BUZZER	ﾌﾞｻﾞｰ	1	[SIL]
10	230C2-42201		DIODE,3A	ﾀﾞｲｵｰﾄﾞ	2	[SIL]
11	27682-62131		GROMMET	ｸﾞﾛﾒｯﾄ	1	[SIL]
12	246B2-43221		WIRE,LEAD,SIL	ﾜｲﾔ	1	[SIL]
13	01400-00008		NUT	ﾅｯﾄ	1	[SIL]
14	02010-00008		WASHER	ﾜｯｼｬ	1	[SIL]

FIG.52 INTERLOCK (TOR-CON):[SIL]

(F7Z326N0) インターロック

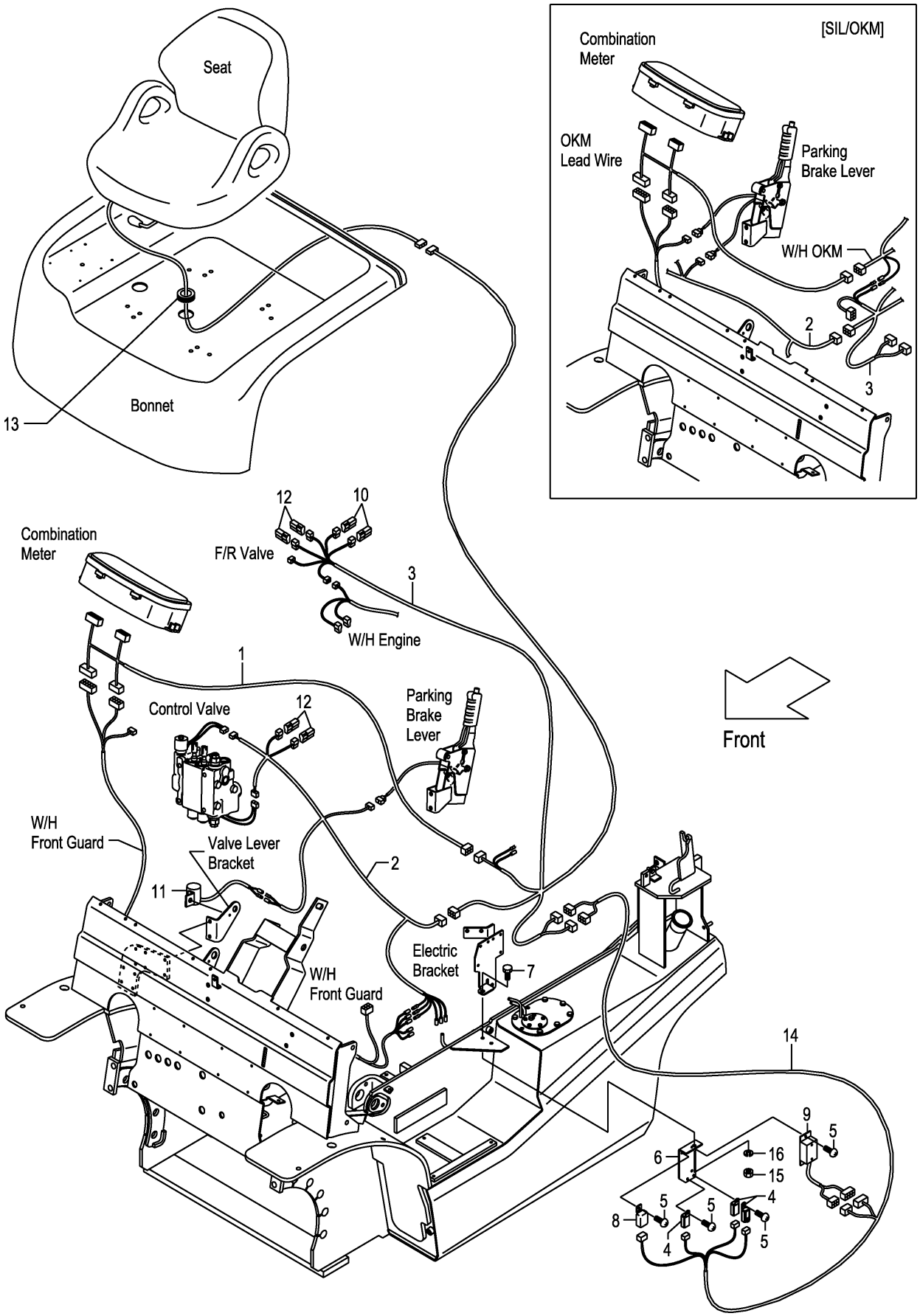

FIG.52
(F7Z326N0)

A:FD30T3Z

Item No	Part No.	Mark	Description		Req'd	Remarks : Serial No.
1	52N56-22021		WIRE,LEAD,OKM	ﾜｲﾔ	1	[SIL](WITHOUT SIL/OKM)
2	52N57-E2001		WIRE-HARNESS,SIL,F	ﾜｲﾔﾊｰﾈｽ	1	[SIL]
3	52N57-E2011		WIRE-HARNESS,SIL,R	ﾜｲﾔﾊｰﾈｽ	1	[SIL]
4	209K2-42351		RELAY,1A	ﾘﾚｰ	3	[SIL]
5	214A2-42611		SCREW	ｽｸﾘｭ	5	[SIL]
6	52N57-E2201		BRACKET,RELAY	ﾌﾞﾗｹｯﾄ	1	[SIL]
7	01185-08025		BOLT	ﾎﾞﾙﾄ	1	[SIL]
8	247C2-43501		RELAY,1C	ﾘﾚｰ	1	[SIL]
9	247C2-43301		TIMER	ﾀｲﾏｰ	1	[SIL]
10	21152-42091		DIODE,1A	ﾀﾞｲｵｰﾄﾞ	2	[SIL]
11	247C2-43601		BUZZER	ﾌﾞｻﾞｰ	1	[SIL]
12	230C2-42201		DIODE,3A	ﾀﾞｲｵｰﾄﾞ	4	[SIL]
13	27682-62131		GROMMET	ｸﾞﾛﾒｯﾄ	1	[SIL]
14	246B2-43221		WIRE,LEAD,SIL	ﾜｲﾔ	1	[SIL]
15	01400-00008		NUT	ﾅｯﾄ	1	[SIL]
16	02010-00008		WASHER	ﾜｯｼｬ	1	[SIL]

FIG.53 DRIVE UNIT MOUNT (CLUTCH)

(F7Z32510) ﾄﾞﾗｲﾌﾞﾕﾆｯﾄﾏｳﾝﾄ

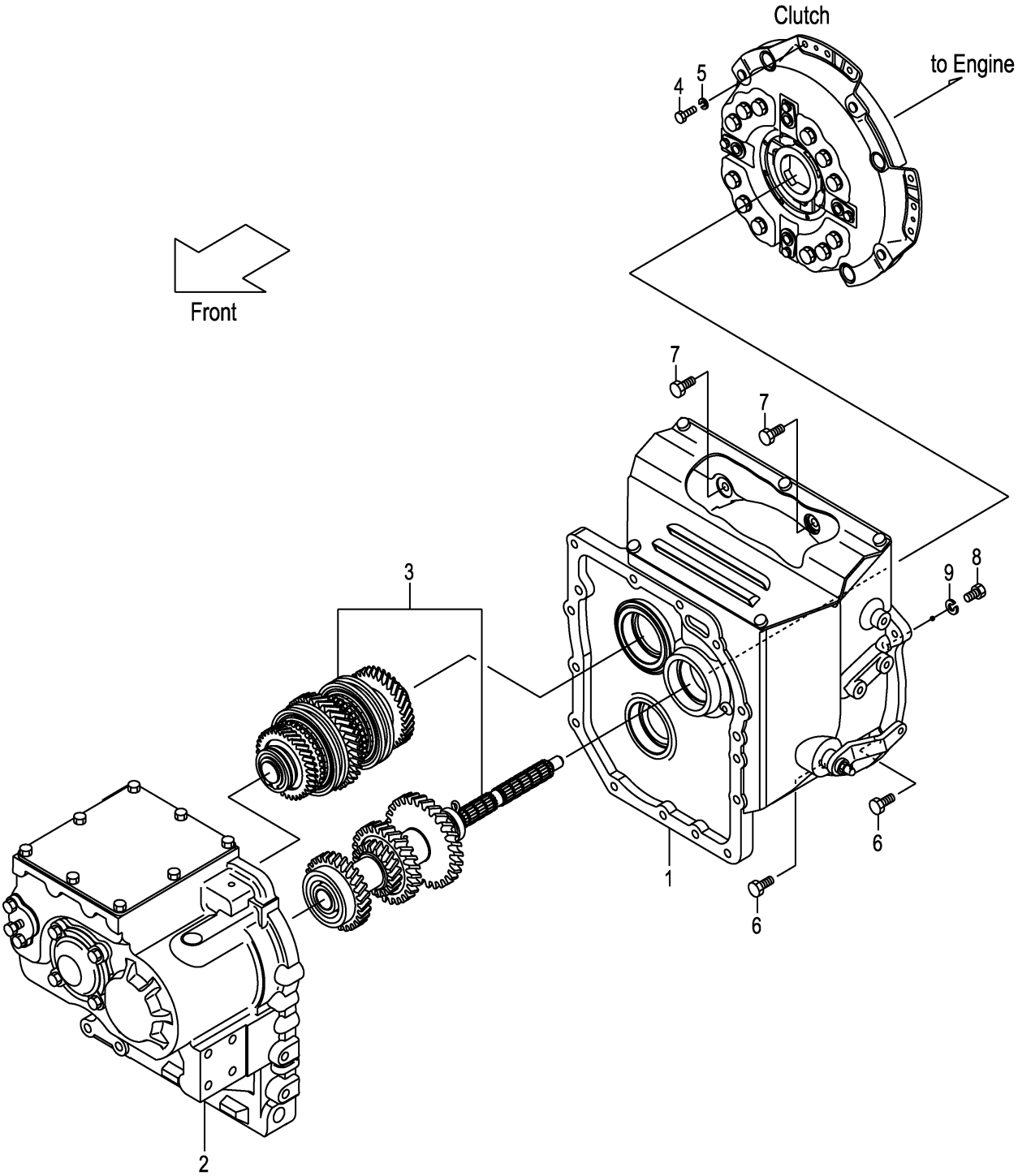

A:FD30C3Z

Item No	Part No.	Mark	Description		Req'd	Remarks : Serial No.
A1	12N42-50201		UNIT-ASSY,DRIVE	ﾄﾞﾗｲﾌﾞﾕﾆｯﾄｱｯｾﾝ	1	INC.1-3
1	NO PART NO.		CLUTCH	ｸﾗｯﾁ	1	SEE FIG.56:1-17
2	NO PART NO.		CASE,T/M	ｹｰｽ	1	SEE FIG.57
3	NO PART NO.		GEAR,T/M	ｷﾞﾔｰ	1	SEE FIG.58
4	01103-08016		BOLT	ﾎﾞﾙﾄ	12	
5	02011-00008		WASHER	ﾜｯｼｬ	12	
6	01184-10030		BOLT	ﾎﾞﾙﾄ	5	
7	01184-10025		BOLT	ﾎﾞﾙﾄ	2	
8	01100-10040		BOLT	ﾎﾞﾙﾄ	1	
9	02010-00010		WASHER	ﾜｯｼｬ	1	

FIG.54 DRIVE UNIT MOUNT (TOR-CON)

(F7Z32520) ﾄﾞﾗｲﾌﾞﾕﾆｯﾄﾏｳﾝﾄ

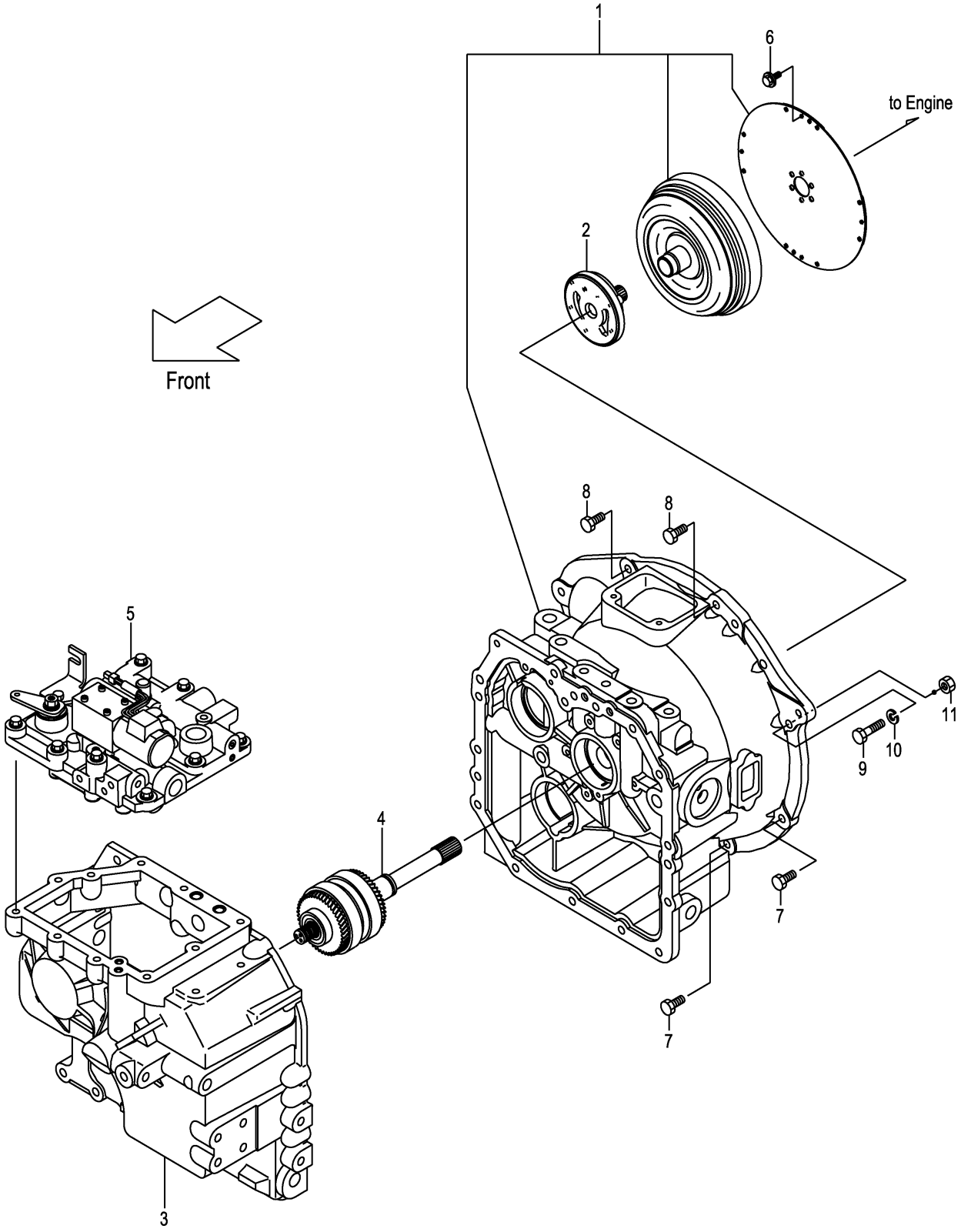

A:FD30T3Z

Item No	Part No.	Mark	Description		Req'd	Remarks : Serial No.
A1	12N52-50201		UNIT-ASSY,DRIVE	ﾄﾞﾗｲﾌﾞﾕﾆｯﾄｱｯｾﾝ	1	INC.1-5
1	NO PART NO.		CASE,T/C	ｹｰｽ	1	SEE FIG.59
2	NO PART NO.		PUMP	ﾎﾟﾝﾌﾟ	1	SEE FIG.60
3	NO PART NO.		CASE,T/M	ｹｰｽ	1	SEE FIG.61
4	NO PART NO.		PACK,CLUTCH	ﾊﾟｯｸ	1	SEE FIG.62
5	NO PART NO.		VALVE,CONTROL	ﾊﾞﾙﾌﾞ	1	SEE FIG.63
6	12N53-82621		BOLT,FLANGE	ﾎﾞﾙﾄ	12	
7	01184-10030		BOLT	ﾎﾞﾙﾄ	5	
8	01184-10025		BOLT	ﾎﾞﾙﾄ	2	
9	01100-10055		BOLT	ﾎﾞﾙﾄ	1	
10	02010-00010		WASHER	ﾜｯｼｬ	1	
11	01400-00010		NUT	ﾅｯﾄ	1	

FIG.55 CHANGE LEVER (CLUTCH)

(F7Z32540) チェンジレバー

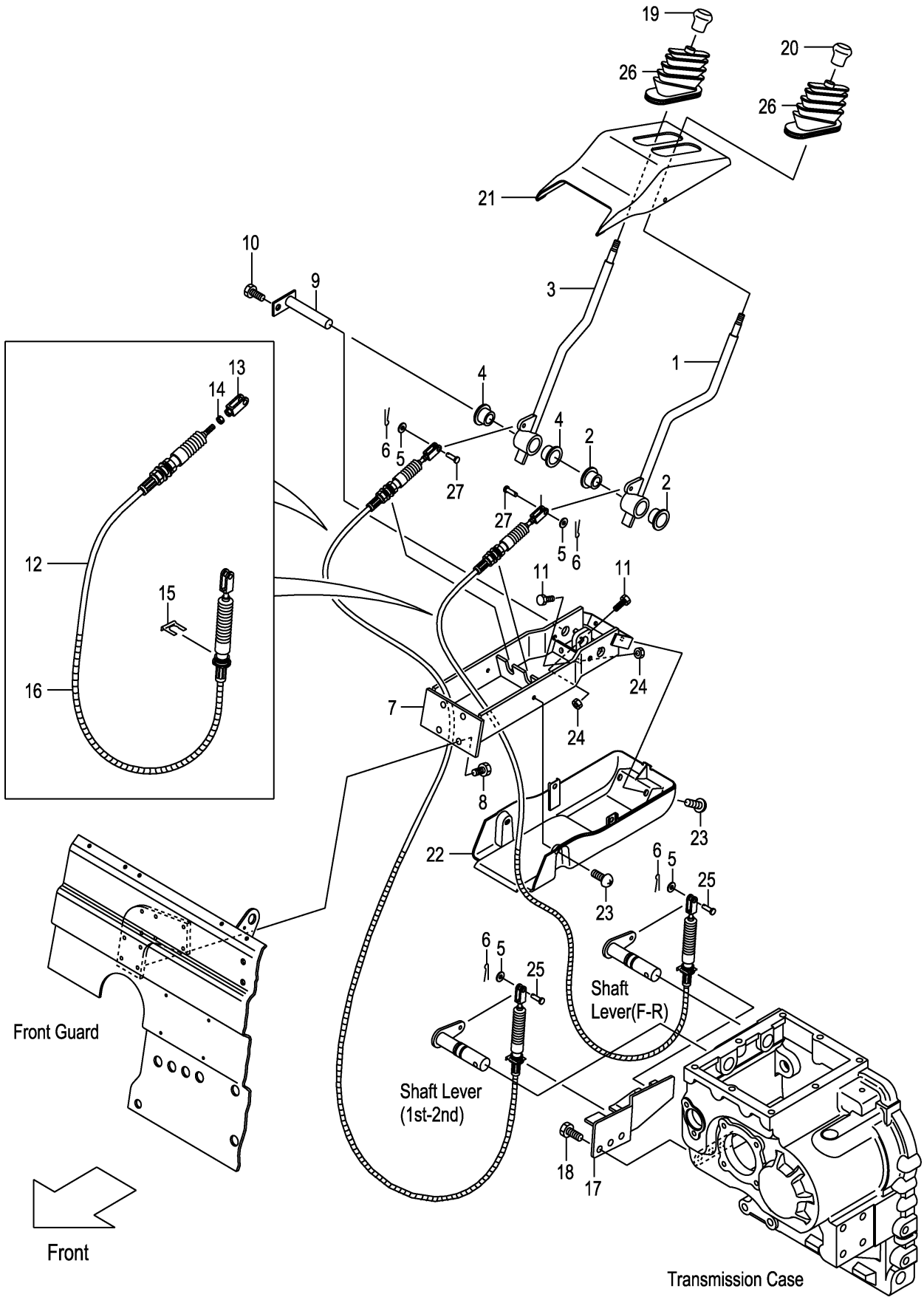

A:FD30C3Z

Item No	Part No.	Mark	Description		Req'd	Remarks : Serial No.
A1	22N43-90201		LEVER-ASSY,DIRECTION		1	INC.1,2
				ﾃﾞｨﾚｸｼｮﾝﾚﾊﾞｰｱｯｾﾝ		
1	NO PART NO.	#	LEVER,DIRECTION	ﾚﾊﾞｰ	1	
2	214A7-42071		BUSHING	ﾌﾞｯｼﾝｸﾞ	2	
A2	22N43-90211		LEVER-ASSY,SPEED	ｽﾋﾟｰﾄﾞﾚﾊﾞｰｱｯｾﾝ	1	INC.3,4
3	NO PART NO.	#	LEVER,SPEED	ﾚﾊﾞｰ	1	
4	214A7-42071		BUSHING	ﾌﾞｯｼﾝｸﾞ	2	
5	02000-00006		WASHER	ﾜｯｼｬ	4	
6	02200-16010		PIN,COTTER	ﾋﾟﾝ	4	
7	22N43-90301		BRACKET	ﾌﾞﾗｹｯﾄ	1	
8	01185-08020		BOLT	ﾎﾞﾙﾄ	4	
9	22N43-92201		SHAFT	ｼｬﾌﾄ	1	
10	01183-08012		BOLT	ﾎﾞﾙﾄ	1	
11	01100-08025		BOLT	ﾎﾞﾙﾄ	4	
A3	22N43-90511		CABLE-ASSY	ｹｰﾌﾞﾙｱｯｾﾝ	2	INC.12-16
12	22N43-93001		CABLE	ｹｰﾌﾞﾙ	2	
13	22N43-93021		END	ｴﾝﾄﾞ	2	
14	01402-00006		NUT	ﾅｯﾄ	2	
15	22N43-93011		CLAMP	ｸﾗﾝﾌﾟ	2	
16	22N43-93031		PROTECTOR	ﾌﾟﾛﾃｸﾀ	2	
17	22N43-92301		BRACKET	ﾌﾞﾗｹｯﾄ	1	
18	01213-10025		BOLT	ﾎﾞﾙﾄ	3	
19	214A2-52002		KNOB,SPEED	ﾉﾌﾞ	1	
20	214A2-52012		KNOB,DIRECTION	ﾉﾌﾞ	1	
21	22N43-92701	+	COVER,LH	ｶﾊﾞｰ	1	1-109
-	22N43-92901		COVER,UPPER	ｶﾊﾞｰ	1	110-
22	22N43-92711	+	COVER,RH	ｶﾊﾞｰ	1	1-109
-	22N43-92911		COVER,UNDER	ｶﾊﾞｰ	1	110-
23	01033-06012		SCREW	ｽｸﾘｭ	4	1-109
-	225R6-42031		SCREW	ｽｸﾘｭ	4	110-
24	01402-00008		NUT	ﾅｯﾄ	4	
25	02262-06015		PIN,CLEVIS	ﾋﾟﾝ	2	
26	22N43-92731		BOOT	ﾌﾞｰﾂ	2	
27	02262-06020		PIN,CLEVIS	ﾋﾟﾝ	2	

FIG.56 CLUTCH (CLUTCH)

(F7Z32550) クラッチ

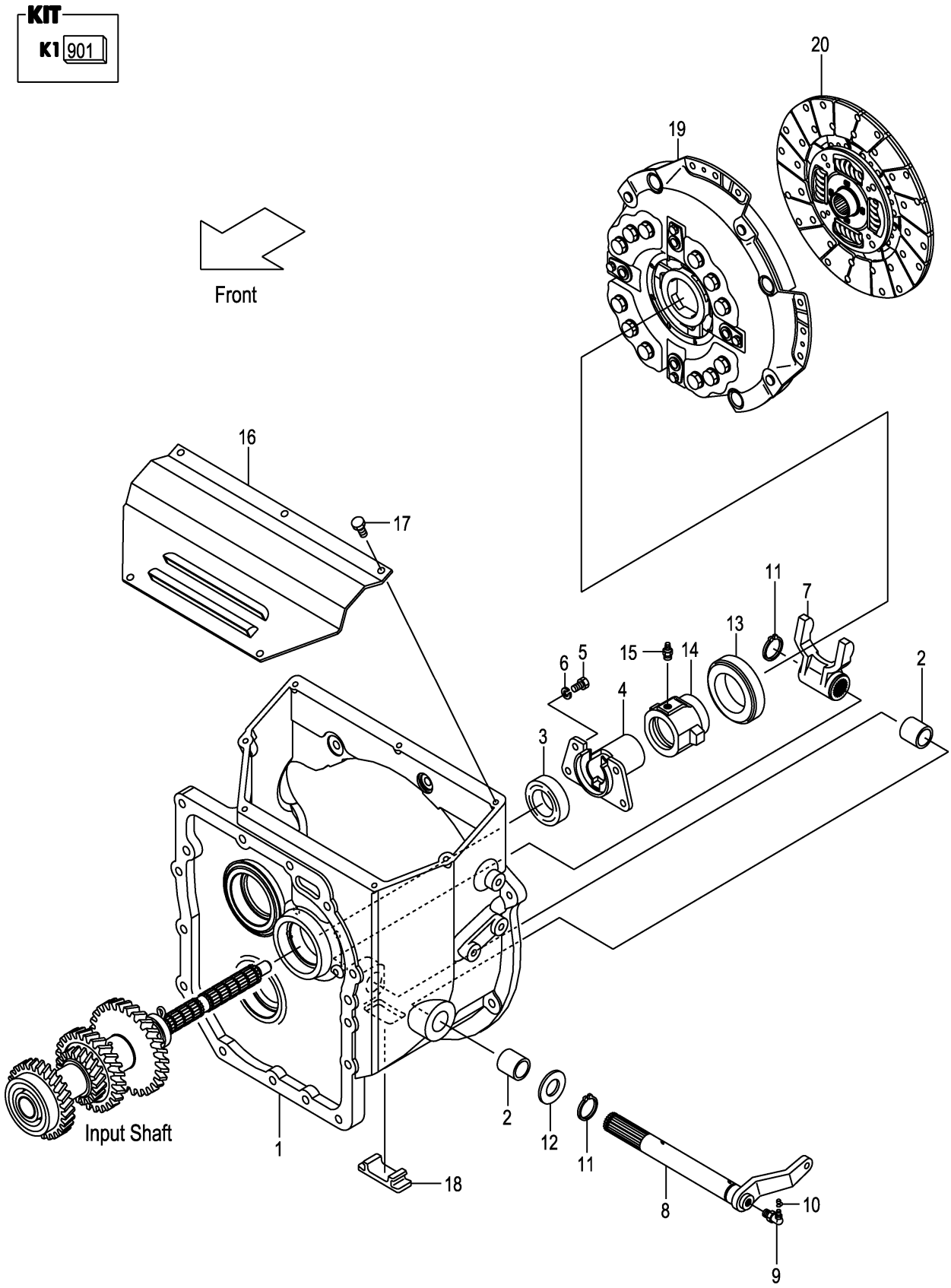

A:FD30C3Z

Item No	Part No.	Mark	Description		Req'd	Remarks : Serial No.
901	12N43-19801	K1	KIT,REPAIR,T/M	ﾘﾍﾟｱｷｯﾄ	1	INC.3,11,FIG.58:3,5,13, 17,19,27,28,30
1	12N43-12001		HOUSING,CLUTCH	ﾊｳｼﾞﾝｸﾞ	1	
2	12003-12021		BUSHING	ﾌﾞｯｼﾝｸﾞ	2	
3	12N43-12011	*	SEAL,OIL	ｼｰﾙ	1	
4	12N43-12021		SUPPORT,RETAINER	ｻﾎﾟｰﾄ	1	
5	01103-08016		BOLT	ﾎﾞﾙﾄ	4	
6	02011-00008		WASHER	ﾜｯｼｬ	4	
7	12N43-12101		YOKE	ﾖｰｸ	1	
8	12N43-12111		SHAFT	ｼｬﾌﾄ	1	
9	04901-00190		FITTING	ﾌｨｯﾃｨﾝｸﾞ	1	
10	22199-12401		CAP,NIPPLE	ｷｬｯﾌﾟ	1	
11	02100-00025	*	RING,SNAP	ｽﾅｯﾌﾟﾘﾝｸﾞ	2	
12	02000-00024		WASHER	ﾜｯｼｬ	1	
13	135C3-12081		BEARING,THRUST	ﾍﾞｱﾘﾝｸﾞ	1	
14	12N43-12201		RETAINER,BEARING	ﾘﾃｰﾅ	1	
15	04901-00100		FITTING	ﾌｨｯﾃｨﾝｸﾞ	1	
16	12N43-12151		COVER,CLUTCH-HOUSING	ｶﾊﾞｰ	1	
17	01183-08016		BOLT	ﾎﾞﾙﾄ	5	
18	12N53-82061		COVER,UNDER	ｶﾊﾞｰ	1	
19	10A63-10201		COVER,CLUTCH	ｶﾊﾞｰ	1	
20	12N43-10211		DISK,CLUTCH	ﾃﾞｨｽｸ	1	

FIG.57 MISSION CASE (CLUTCH)

(F7Z32560) ミッションケース

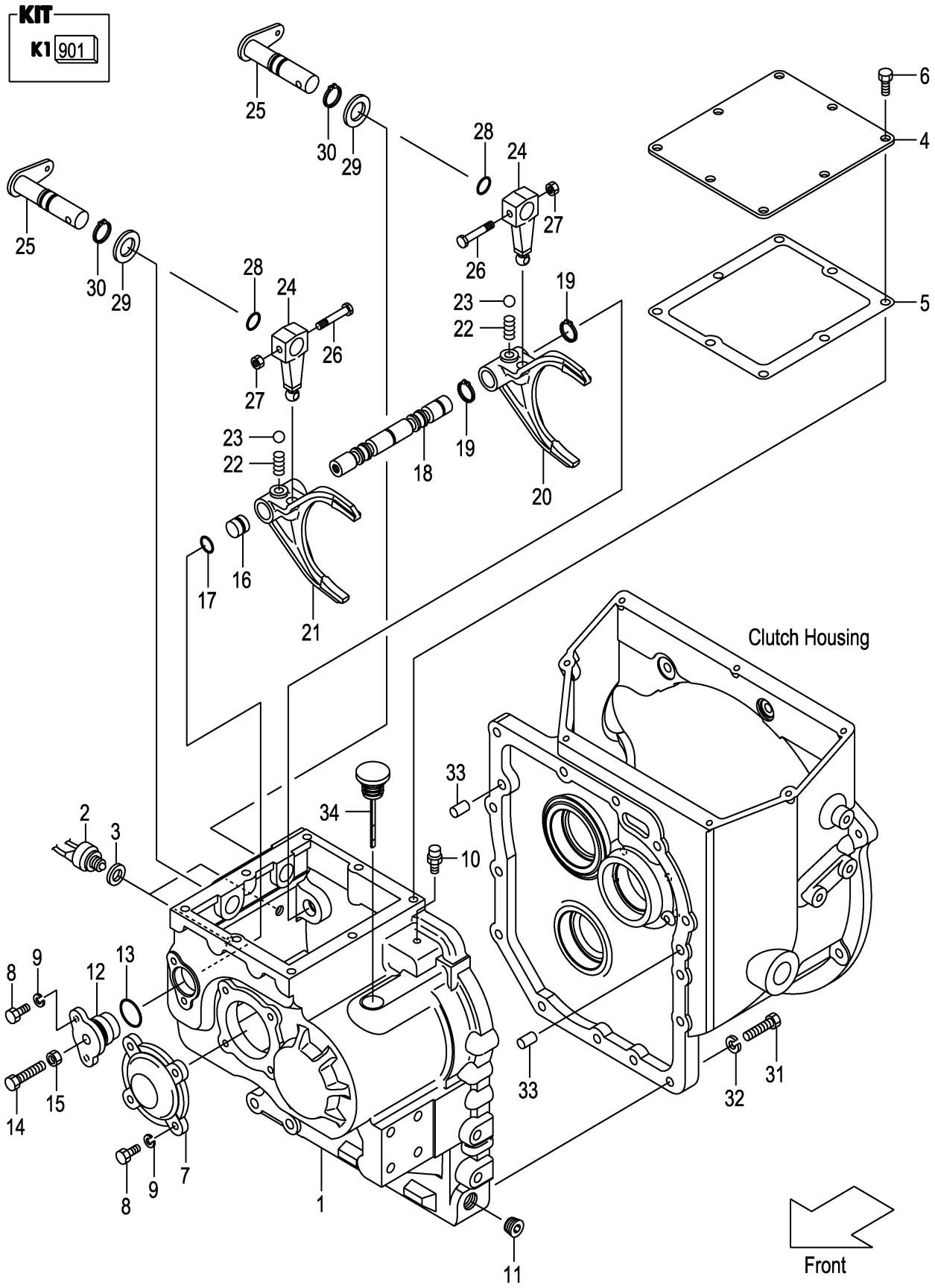

A:FD30C3Z

Item No	Part No.	Mark	Description		Req'd	Remarks : Serial No.
901	12N43-19811	K1	KIT,REPAIR,SHIFT-ROD	ﾘﾍﾟｱｷｯﾄ	1	INC.3,5,13,17,19,27,28,30
1	12N43-42001		CASE,T/M	ｹｰｽ	1	
2	12003-42451		SWITCH,BACK-LAMP	ｽｲｯﾁ	2	
3	12003-42461	*	PACKING,BACK-LAMP	ﾊﾟｯｷﾝｸﾞ	2	
4	12N43-42511		COVER,CASE	ｶﾊﾞｰ	1	
5	12N43-42521	*	GASKET,CASE-COVER	ｶﾞｽｹｯﾄ	1	
6	01184-10016		BOLT	ﾎﾞﾙﾄ	8	
7	12N43-42031		COVER,BEARING	ｶﾊﾞｰ	1	
8	01103-08020		BOLT	ﾎﾞﾙﾄ	6	
9	02011-00008		WASHER	ﾜｯｼｬ	6	
10	15573-42151		BREATHER,AIR	ﾌﾞﾘｰｻﾞ	1	
11	12163-82541		PLUG	ﾌﾟﾗｸﾞ	1	
12	12003-42052		SUPPORT,ARM-SHAFT	ｻﾎﾟｰﾄ	1	
13	03310-00300	*	O-RING	Oﾘﾝｸﾞ	1	
14	01123-10045		BOLT	ﾎﾞﾙﾄ	1	
15	01400-00010		NUT	ﾅｯﾄ	1	
16	12003-42061		SPACER	ｽﾍﾟｰｻ	1	
17	03300-00160	*	O-RING	Oﾘﾝｸﾞ	1	
18	12N43-42401		ROD,SHIFT	ﾛｯﾄﾞ	1	
19	02100-00020	*	RING,SNAP	ｽﾅｯﾌﾟﾘﾝｸﾞ	2	
20	12N43-42411		FORK,SHIFT,F-R	ﾌｫｰｸ	1	
21	12N43-42421		FORK,SHIFT,H-L	ﾌｫｰｸ	1	
22	12N43-42481		SPRING	ｽﾌﾟﾘﾝｸﾞ	2	
23	03190-00013		BALL,STEEL	ﾎﾞｰﾙ	2	
24	12N43-42431		ARM,SHIFT	ｱｰﾑ	2	
25	12N43-42441		LEVER,SHIFT	ﾚﾊﾞｰ	2	
26	12N43-42471		BOLT	ﾎﾞﾙﾄ	2	
27	23652-12051	*	NUT	ﾅｯﾄ	2	
28	03300-00180	*	O-RING	Oﾘﾝｸﾞ	2	
29	02000-00022		WASHER	ﾜｯｼｬ	2	
30	02100-00022	*	RING,SNAP	ｽﾅｯﾌﾟﾘﾝｸﾞ	2	
31	01103-10040		BOLT	ﾎﾞﾙﾄ	14	
32	02011-00010		WASHER	ﾜｯｼｬ	14	
33	02212-12020		PIN,PARALLEL	ﾋﾟﾝ	2	
34	12N43-42501		GAUGE,LEVEL	ｹﾞｰｼﾞ	1	

FIG.58 MISSION GEAR (CLUTCH)

(F7Z32570) ﾐｯｼｮﾝｷﾞﾔｰ

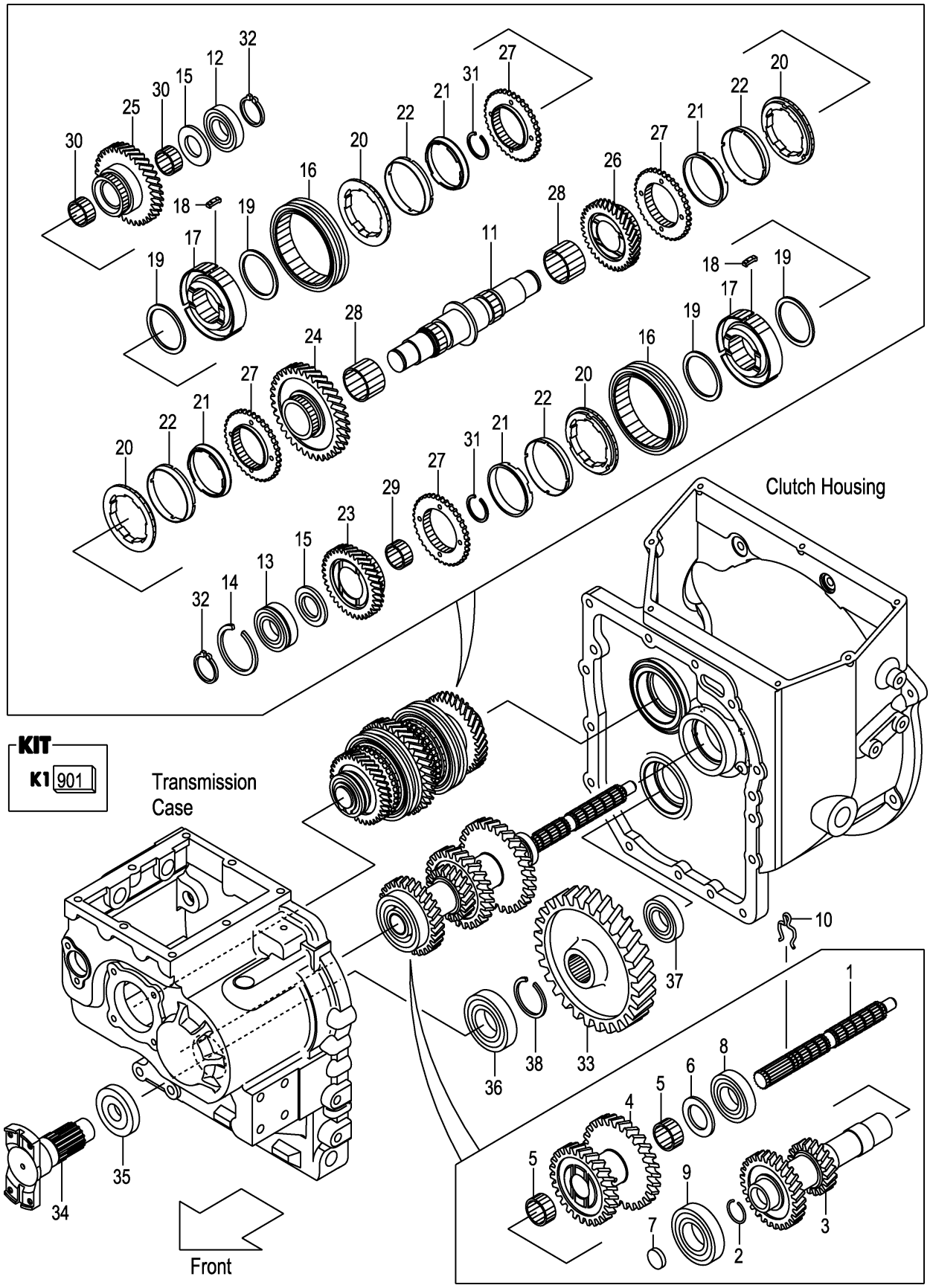

A:FD30C3Z

Item No	Part No.	Mark	Description		Req'd	Remarks : Serial No.
901	12N43-19801	K1	KIT,REPAIR,T/M	ﾘﾍﾟｱｷｯﾄ	1	INC.2,7,14,32,35,38, FIG.56:3,11
1	12N43-42051		SHAFT,MAIN-DRIVE	ｼｬﾌﾄ	1	
2	12N43-42071	*	RING,SNAP	ｽﾅｯﾌﾟﾘﾝｸﾞ	1	
3	12N43-42101		SHAFT,INPUT	ｼｬﾌﾄ	1	
4	12N43-42111		GEAR,COUNTER	ｷﾞﾔｰ	1	
5	12N43-42121		BEARING,NEEDLE	ﾍﾞｱﾘﾝｸﾞ	2	
6	12N43-42131		PLATE,THRUST	ﾌﾟﾚｰﾄ	1	
7	134A3-42071	*	CAP	ｷｬｯﾌﾟ	1	
8	03000-06207		BEARING,BALL	ﾍﾞｱﾘﾝｸﾞ	1	
9	03000-06208		BEARING,BALL	ﾍﾞｱﾘﾝｸﾞ	1	
10	12N43-42061		PIN,LOCK	ﾋﾟﾝ	1	
11	12N43-42141		SHAFT,MAIN	ｼｬﾌﾄ	1	
12	03000-06306		BEARING,BALL	ﾍﾞｱﾘﾝｸﾞ	1	
13	03003-06306		BEARING,BALL	ﾍﾞｱﾘﾝｸﾞ	1	
14	03192-30072	*	RING,SNAP	ｽﾅｯﾌﾟﾘﾝｸﾞ	1	
15	12N43-42191		PLATE,THRUST	ﾌﾟﾚｰﾄ	2	
16	12N43-42151		SLEEVE	ｽﾘｰﾌﾞ	2	
17	12N43-42161		HUB,CLUTCH	ﾊﾌﾞ	2	
18	12N43-42171		INSERT	ｲﾝｻｰﾄ	6	
19	15573-42021		SPRING,INSERT	ｽﾌﾟﾘﾝｸﾞ	4	
A1	12N43-40251		RING-ASSY,SYNCHRO	ｼﾝｸﾛﾘﾝｸﾞｱｯｾﾝ	4	INC.20-22
20	12N43-42201		RING,OUTER,SYNCHRO	ﾘﾝｸﾞ	4	
21	12N43-42211		RING,INNER,SYNCHRO	ﾘﾝｸﾞ	4	
22	12N43-42221		CORN,MIDDLE	ｺｰﾝ	4	
23	12N43-42251		GEAR,HIGH-SPEED	ｷﾞﾔｰ	1	
24	12N43-42261		GEAR,LOW-SPEED	ｷﾞﾔｰ	1	
25	12N43-42271		GEAR,FORWARD	ｷﾞﾔｰ	1	
26	12N43-42281		GEAR,REVERSE	ｷﾞﾔｰ	1	
27	12N43-42291		GEAR	ｷﾞﾔｰ	4	
28	12N43-42301		BEARING,NEEDLE	ﾍﾞｱﾘﾝｸﾞ	2	
29	12003-42251		BEARING,NEEDLE	ﾍﾞｱﾘﾝｸﾞ	1	
30	12N43-42321		BEARING,NEEDLE	ﾍﾞｱﾘﾝｸﾞ	2	
31	02120-00038		RING,SNAP	ｽﾅｯﾌﾟﾘﾝｸﾞ	2	
32	02100-00030	*	RING,SNAP	ｽﾅｯﾌﾟﾘﾝｸﾞ	2	
-	12N43-42551	*	RING,SNAP,T-1.7	ｽﾅｯﾌﾟﾘﾝｸﾞ	(2)	
-	12N43-42561	*	RING,SNAP,T-1.8	ｽﾅｯﾌﾟﾘﾝｸﾞ	(2)	
-	12N43-42571	*	RING,SNAP,T-1.9	ｽﾅｯﾌﾟﾘﾝｸﾞ	(2)	
-	12N43-42581	*	RING,SNAP,T-2.0	ｽﾅｯﾌﾟﾘﾝｸﾞ	(2)	
33	12N43-42351		GEAR,OUTPUT	ｷﾞﾔｰ	1	
34	12N53-82201		FLANGE,T/M-OUTPUT	ﾌﾗﾝｼﾞ	1	
35	12N53-82211	*	SEAL,OIL	ｼｰﾙ	1	
36	03000-06208		BEARING,BALL	ﾍﾞｱﾘﾝｸﾞ	1	
37	03000-06306		BEARING,BALL	ﾍﾞｱﾘﾝｸﾞ	1	
38	02120-00040	*	RING,SNAP	ｽﾅｯﾌﾟﾘﾝｸﾞ	1	

FIG.59 TORQUE CONVERTER CASE (TOR-CON)

(F7Z32580) トルクコンバータケース

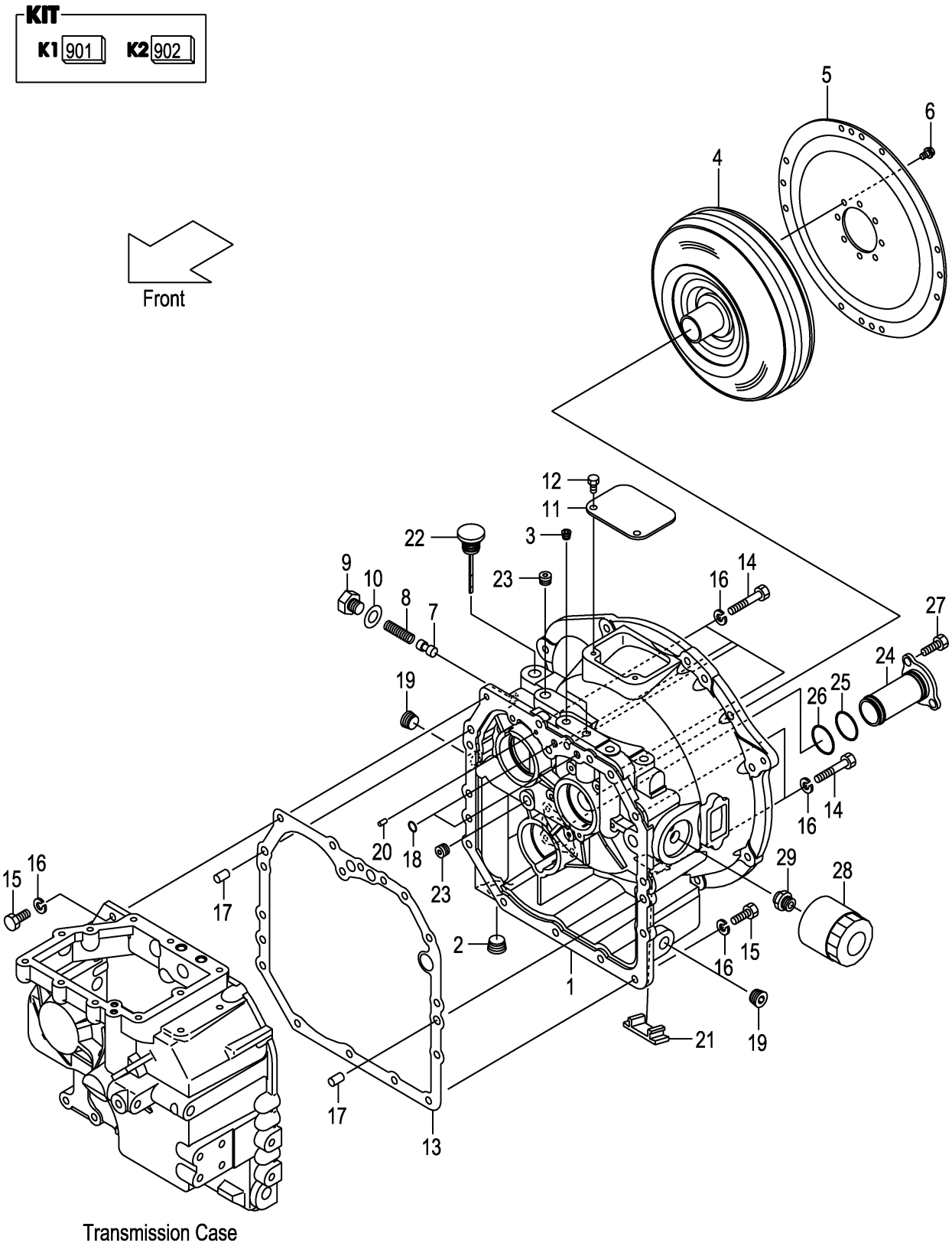

A:FD30T3Z

Item No	Part No.	Mark	Description		Req'd	Remarks : Serial No.
901	12N53-89801	K1	KIT,REPAIR,T/M	ﾘﾍﾟｱｷｯﾄ	1	INC.10,13,18,FIG.61:9,11-14
902	12N53-89811	K2	KIT,SUCTION-STRAINER	ｻｸｼｮﾝｽﾄﾚｰﾅｷｯﾄ	1	INC.24-26
1	12N53-82001		CASE,TOR-CON	ｹｰｽ	1	
2	27397-52101		PLUG	ﾌﾟﾗｸﾞ	1	
3	116H3-82101		PLUG	ﾌﾟﾗｸﾞ	2	
4	12N53-80301		TORQUE-CONVERTER	ﾄﾙｸｺﾝﾊﾞｰﾀ	1	
5	12N53-80311		PLATE,INPUT	ﾌﾟﾚｰﾄ	1	
6	12N53-82621		BOLT,FLANGE	ﾎﾞﾙﾄ	8	
7	12N53-82011		PISTON	ﾋﾟｽﾄﾝ	1	
8	12163-82331		SPRING	ｽﾌﾟﾘﾝｸﾞ	1	
9	12N53-82021		PLUG	ﾌﾟﾗｸﾞ	1	
10	12163-82421	*	PACKING	ﾊﾟｯｷﾝｸﾞ	1	
11	12N53-82041		COVER,UPPER	ｶﾊﾞｰ	1	
12	01185-08016		BOLT	ﾎﾞﾙﾄ	2	
13	12N53-82081	*	GASKET	ｶﾞｽｹｯﾄ	1	
14	01103-10065		BOLT	ﾎﾞﾙﾄ	6	
15	01103-10030		BOLT	ﾎﾞﾙﾄ	9	
16	02011-00010		WASHER	ﾜｯｼｬ	15	
17	02212-12020		PIN,PARALLEL	ﾋﾟﾝ	2	
18	15583-82521	*	O-RING	Oﾘﾝｸﾞ	2	
19	12163-82541		PLUG	ﾌﾟﾗｸﾞ	2	
20	15943-83261		PIN,PARALLEL	ﾋﾟﾝ	1	
21	12N53-82061		COVER,UNDER	ｶﾊﾞｰ	1	
22	12N53-82711		GAUGE,LEVEL	ｹﾞｰｼﾞ	1	
23	24329-45541		PLUG	ﾌﾟﾗｸﾞ	2	
24	NO PART NO.	#*	STRAINER,SUCTION	ｽﾄﾚｰﾅ	1	
25	115G3-82111	*	O-RING	Oﾘﾝｸﾞ	1	
26	12N53-82761	*	O-RING	Oﾘﾝｸﾞ	1	
27	01100-08020		BOLT	ﾎﾞﾙﾄ	3	
28	115G3-82241		FILTER,OIL	ﾌｨﾙﾀ	1	
29	115G3-82251		NIPPLE	ﾆｯﾌﾟﾙ	1	

FIG.60 CHARGING PUMP (TOR-CON)

(F7Z32590) ﾁｬｰｼﾞﾝｸﾞﾎﾟﾝﾌﾟ

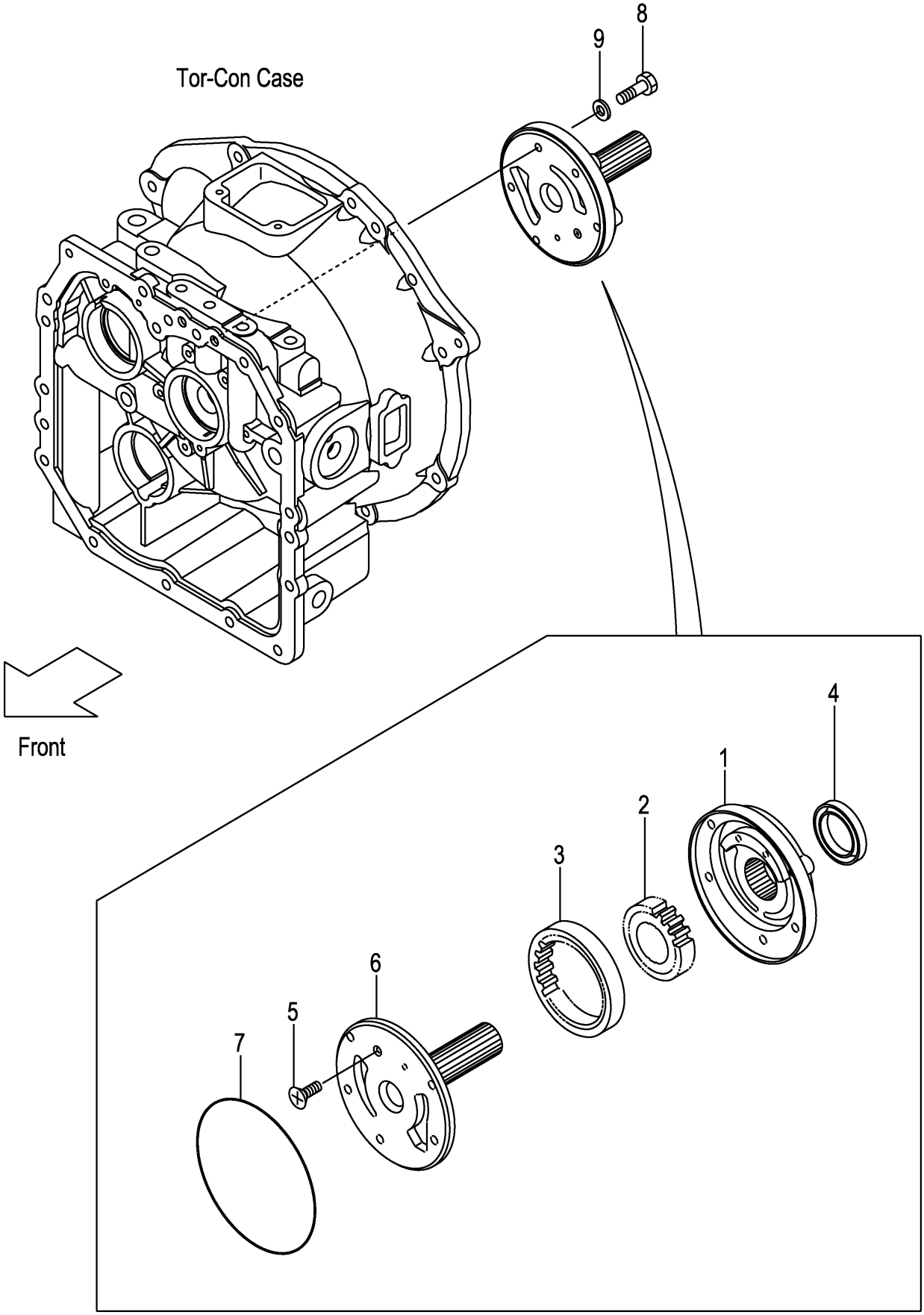

FIG.60

(F7Z32590)

A:FD30T3Z

Item No	Part No.	Mark	Description		Req'd	Remarks : Serial No.
A1	12N53-80321		PUMP-ASSY,CHARGING		1	INC.1-7
				ﾁｬｰｼﾞﾝｸﾞﾎﾟﾝﾌﾟｱｯｾﾝ		
1	NO PART NO.	#	CASE,PUMP	ｹｰｽ	1	
2	NO PART NO.	#	GEAR,DRIVE	ｷﾞﾔｰ	1	
3	NO PART NO.	#	GEAR,DRIVEN	ｷﾞﾔｰ	1	
4	BK-8104209010		SEAL,OIL	ｼｰﾙ	1	
5	BK-8059061000		SCREW	ｽｸﾘｭ	1	
6	BK-7341006000		SUPPORT,STARTER	ｻﾎﾟｰﾄ	1	
7	BK-81431A4700		O-RING	Oﾘﾝｸﾞ	1	
8	12N53-82641		BOLT,FLANGE	ﾎﾞﾙﾄ	5	
9	12163-82561		PACKING	ﾊﾟｯｷﾝｸﾞ	5	

FIG.61 MISSION CASE (TOR-CON)

(F7Z325A0) ミッションケース

KIT
K1 901

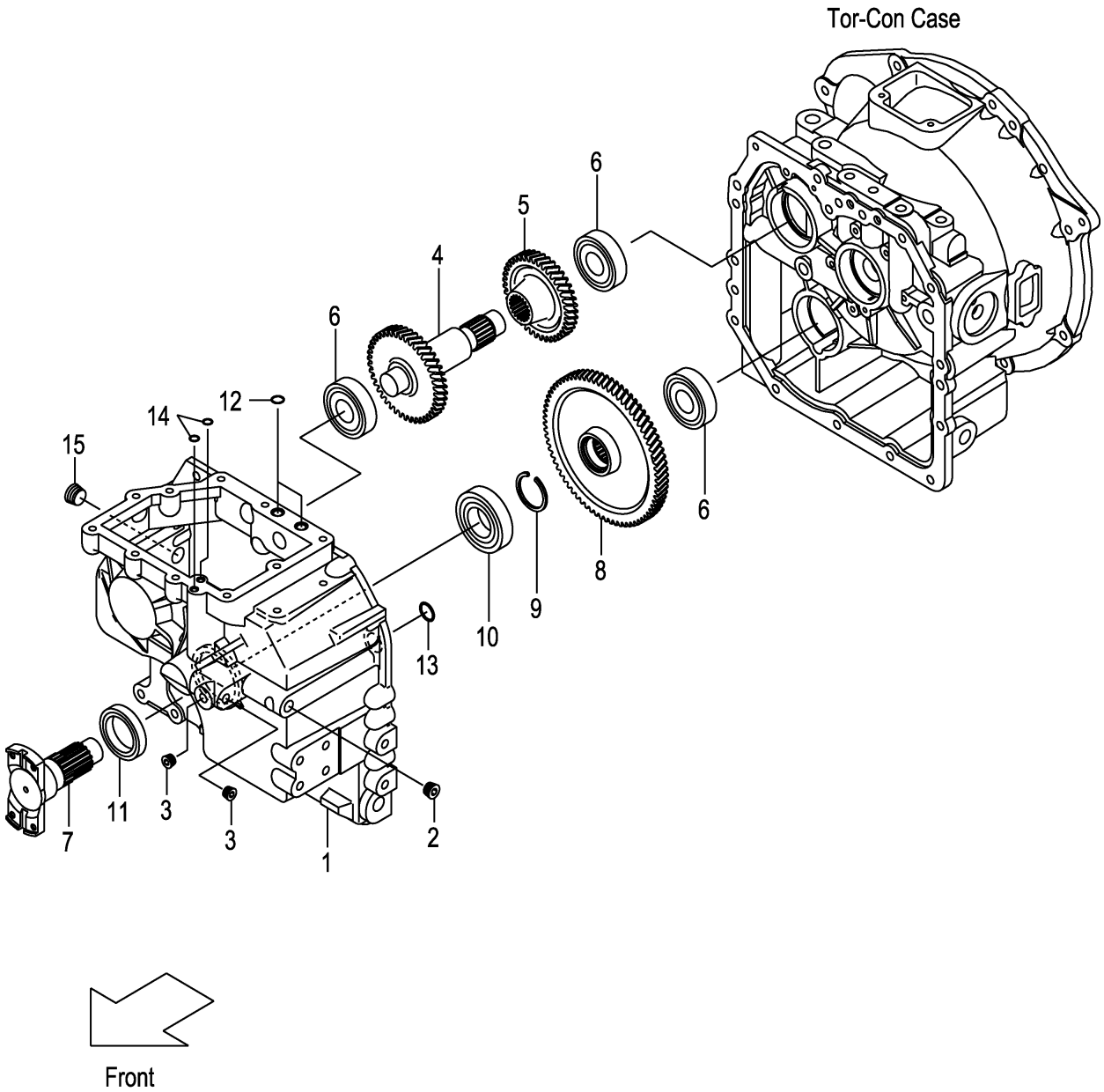

A:FD30T3Z

Item No	Part No.	Mark	Description		Req'd	Remarks : Serial No.
901	12N53-89801	K1	KIT,REPAIR,T/M	ﾘﾍﾟｱｷｯﾄ	1	INC.9,11-14,FIG.59:10,13,18
1	12N53-82091		CASE,T/M	ｹｰｽ	1	
2	24329-45541		PLUG	ﾌﾟﾗｸﾞ	1	
3	116H3-82101		PLUG	ﾌﾟﾗｸﾞ	2	
4	12N53-82151		SHAFT,IDLER	ｼｬﾌﾄ	1	
5	12N53-82161		SHAFT,GEAR	ｼｬﾌﾄ	1	
6	03000-06306		BEARING,BALL	ﾍﾞｱﾘﾝｸﾞ	3	
7	12N53-82201		FLANGE,T/M-OUTPUT	ﾌﾗﾝｼﾞ	1	
8	12N53-82171		GEAR,OUTPUT	ｷﾞﾔｰ	1	
9	02120-00040	*	RING,SNAP	ｽﾅｯﾌﾟﾘﾝｸﾞ	1	
10	03000-06208		BEARING,BALL	ﾍﾞｱﾘﾝｸﾞ	1	
11	12N53-82211	*	SEAL,OIL	ｼｰﾙ	1	
12	15583-82521	*	O-RING	Oﾘﾝｸﾞ	2	
13	15583-82101	*	O-RING	Oﾘﾝｸﾞ	1	
14	15583-82571	*	O-RING	Oﾘﾝｸﾞ	2	
15	12163-82541		PLUG	ﾌﾟﾗｸﾞ	1	

FIG.62 CLUTCH PACK (TOR-CON)

(F7Z325B0) クラッチパック

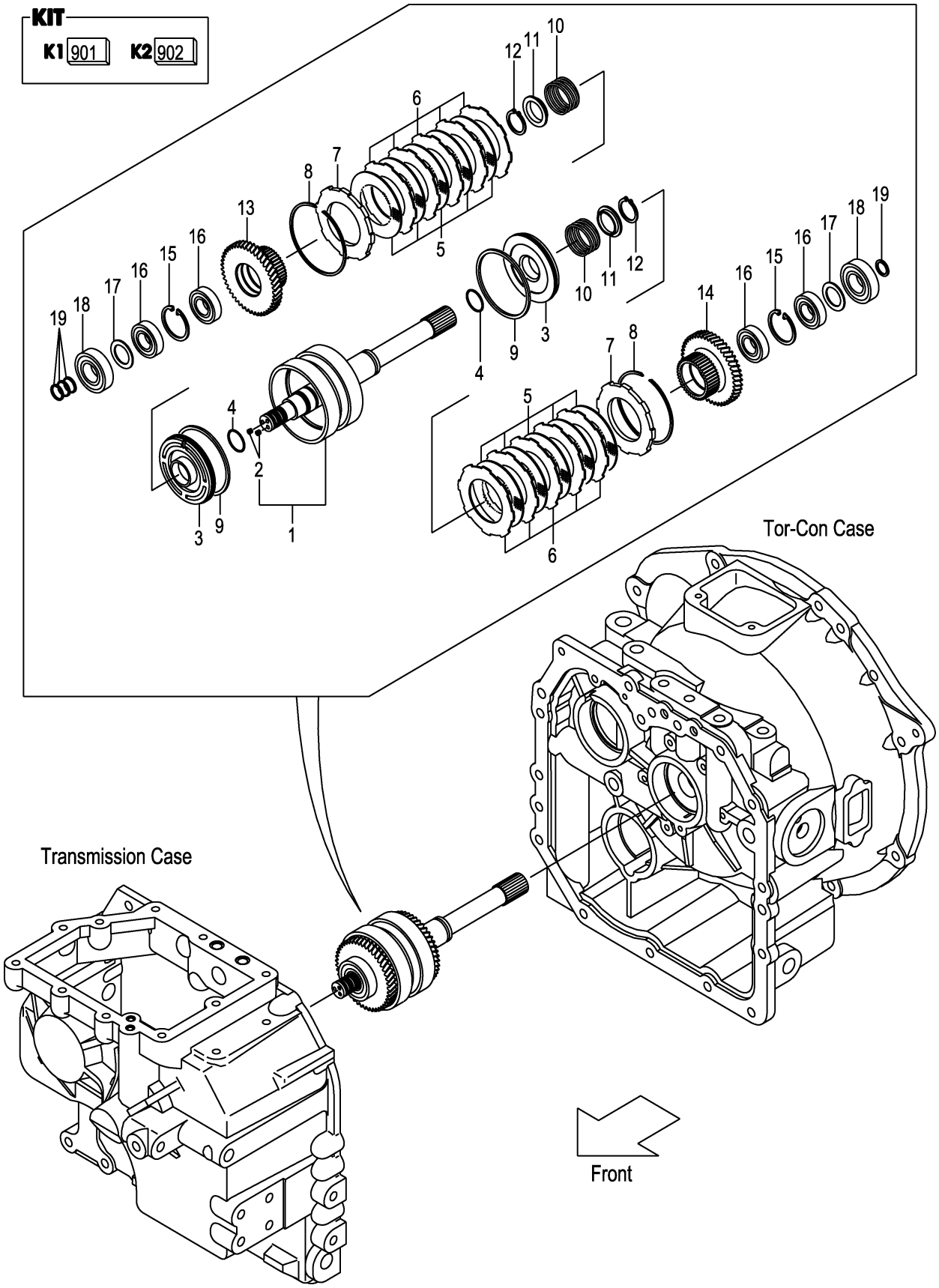

A:FD30T3Z

Item No	Part No.	Mark	Description		Req'd	Remarks : Serial No.
A1	12N53-80201		CLUTCH-ASSY,HYDRAU	ﾊｲﾄﾞﾛｸﾗｯﾁｱｯｾﾝ	1	INC.1-19
901	134G3-89811	K1	KIT,REPAIR,CLUTCH	ﾘﾍﾟｱｷｯﾄ	1	INC.4,8,9,11,12,19
902	134G3-89831	K2	KIT,REPAIR,DISK	ﾘﾍﾟｱｷｯﾄ	1	INC.5,6
1	12N53-82131		SHAFT,INPUT	ｼｬﾌﾄ	1	INC.2
2	01066-08008		PLUG	ﾌﾟﾗｸﾞ	2	
3	134G3-82111		PISTON	ﾋﾟｽﾄﾝ	2	
4	11243-82211	*	O-RING	Oﾘﾝｸﾞ	2	
5	134B3-82401	*	PLATE,FRICTION	ﾌﾟﾚｰﾄ	10	
6	134G3-82121	*	PLATE,MATING	ﾌﾟﾚｰﾄ	10	
7	134G3-82131		END,CLUTCH	ｴﾝﾄﾞ	2	
8	11243-82181	*	RING,SNAP	ｽﾅｯﾌﾟﾘﾝｸﾞ	2	
9	134G3-82141	*	RING,SEAL	ﾘﾝｸﾞ	2	
10	11243-82081		SPRING,RETURN,CLUTCH	ｽﾌﾟﾘﾝｸﾞ	2	
11	11243-82091	*	SHEET,SPRING	ｼｰﾄ	2	
12	02100-00040	*	RING,SNAP	ｽﾅｯﾌﾟﾘﾝｸﾞ	2	
13	12N53-82101		GEAR,FORWARD	ｷﾞﾔｰ	1	
14	12N53-82111		GEAR,REVERSE	ｷﾞﾔｰ	1	
15	02121-00058		RING,SNAP	ｽﾅｯﾌﾟﾘﾝｸﾞ	2	
16	115G3-82351		BEARING,BALL	ﾍﾞｱﾘﾝｸﾞ	4	
17	115G3-82361		PLATE,THRUST	ﾌﾟﾚｰﾄ	2	
18	03000-06306		BEARING,BALL	ﾍﾞｱﾘﾝｸﾞ	2	
19	11243-82161	*	RING,SEAL	ﾘﾝｸﾞ	4	

FIG.63 CONTROL VALVE (TOR-CON)

(F7Z325C0) コントロールバルブ

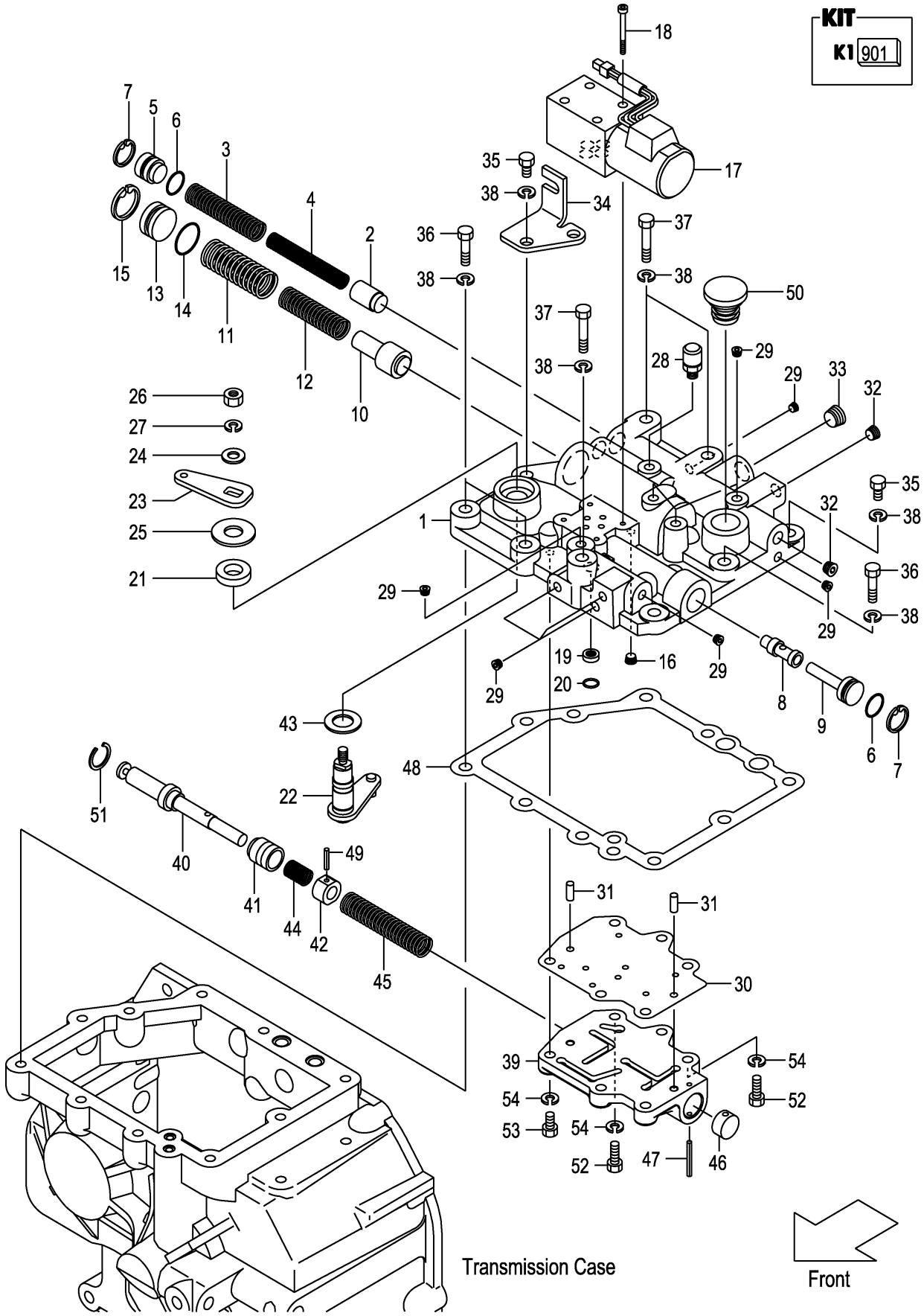

A:FD30T3Z

Item No	Part No.	Mark	Description		Req'd	Remarks : Serial No.
A1	12N53-80341		VALVE-ASSY,CONTROL	ｺﾝﾄﾛｰﾙﾊﾞﾙﾌﾞｱｯｾﾝ	1	INC.1-51
901	12N53-89831	K1	KIT,REPAIR,VALVE	ﾘﾍﾟｱｷｯﾄ	1	INC.6,7,14,15,21,25,30,43, 47,48,51
1	12N53-82221		COVER,CASE	ｶﾊﾞｰ	1	
2	12N53-82291		PISTON,MAIN-RELIEF	ﾋﾟｽﾄﾝ	1	
3	15583-82411		SPRING	ｽﾌﾟﾘﾝｸﾞ	1	
4	15583-82421		SPRING	ｽﾌﾟﾘﾝｸﾞ	1	
5	12N53-82371		PLUG,MAIN-RELIEF	ﾌﾟﾗｸﾞ	1	
6	118H3-82231	*	O-RING	Oﾘﾝｸﾞ	2	
7	02110-00022	*	RING,SNAP	ｽﾅｯﾌﾟﾘﾝｸﾞ	2	
8	139B3-82121		SPOOL	ｽﾌﾟｰﾙ	1	
9	12N53-82351		PLUG,FR-PISTON	ﾌﾟﾗｸﾞ	1	
10	15583-82441		SPOOL,ACC	ｽﾌﾟｰﾙ	1	
11	15583-82451		SPRING	ｽﾌﾟﾘﾝｸﾞ	1	
12	15583-82461		SPRING	ｽﾌﾟﾘﾝｸﾞ	1	
13	12N53-82361		PLUG,ACC	ﾌﾟﾗｸﾞ	1	
14	12N53-82581	*	O-RING	Oﾘﾝｸﾞ	1	
15	02110-00030	*	RING,SNAP	ｽﾅｯﾌﾟﾘﾝｸﾞ	1	
16	115G3-82671		PLUG,CHOKE	ﾌﾟﾗｸﾞ	1	
17	12N53-82551		VALVE,SOLENOID	ﾊﾞﾙﾌﾞ	1	
18	01170-05045		BOLT	ﾎﾞﾙﾄ	4	
19	12N53-82531		FILTER,COIN	ﾌｨﾙﾀ	1	
20	12N53-82571		O-RING	Oﾘﾝｸﾞ	1	
21	12N53-82251	*	SEAL,OIL	ｼｰﾙ	1	
22	12N53-82421		LINK,INCHING	ﾘﾝｸ	1	
23	12N53-82451		PLATE,INCHING	ﾌﾟﾚｰﾄ	1	
24	23656-42601		WASHER	ﾜｯｼｬ	1	
25	12N53-82781	*	WASHER	ﾜｯｼｬ	1	
26	01400-00008		NUT	ﾅｯﾄ	1	
27	02011-00008		WASHER	ﾜｯｼｬ	1	
28	15573-42151		BREATHER,AIR	ﾌﾞﾘｰｻﾞ	1	
29	116H3-82201		PLUG	ﾌﾟﾗｸﾞ	10	
30	12N53-82721	*	PLATE,SEPARATE	ﾌﾟﾚｰﾄ	1	
31	02212-06016		PIN,PARALLEL	ﾋﾟﾝ	2	
32	116H3-82101		PLUG	ﾌﾟﾗｸﾞ	2	
33	24329-45541		PLUG	ﾌﾟﾗｸﾞ	1	
34	12N53-82741		BRACKET,LINK	ﾌﾞﾗｹｯﾄ	1	
35	01103-10030		BOLT	ﾎﾞﾙﾄ	4	
-	01103-10030		BOLT	ﾎﾞﾙﾄ	2	[TPM]
36	01103-10040		BOLT	ﾎﾞﾙﾄ	3	
37	01103-10060		BOLT	ﾎﾞﾙﾄ	3	
38	02011-00010		WASHER	ﾜｯｼｬ	10	
39	12N53-82231		BODY,VALVE	ﾎﾞﾃﾞｨ	1	
40	12N53-82731		SPOOL,INCHING	ｽﾌﾟｰﾙ	1	
41	12N53-82321		PLUNGER	ﾌﾟﾗﾝｼﾞｬ	1	
42	12N53-82331		PISTON	ﾋﾟｽﾄﾝ	1	
43	12N53-82771	*	WASHER	ﾜｯｼｬ	1	
44	12N53-82501		SPRING	ｽﾌﾟﾘﾝｸﾞ	1	
45	12N53-82481		SPRING	ｽﾌﾟﾘﾝｸﾞ	1	
46	12N53-82401		PLUG	ﾌﾟﾗｸﾞ	1	

FIG.63 CONTROL VALVE (TOR-CON)

(F7Z325C0) コントロールバルブ

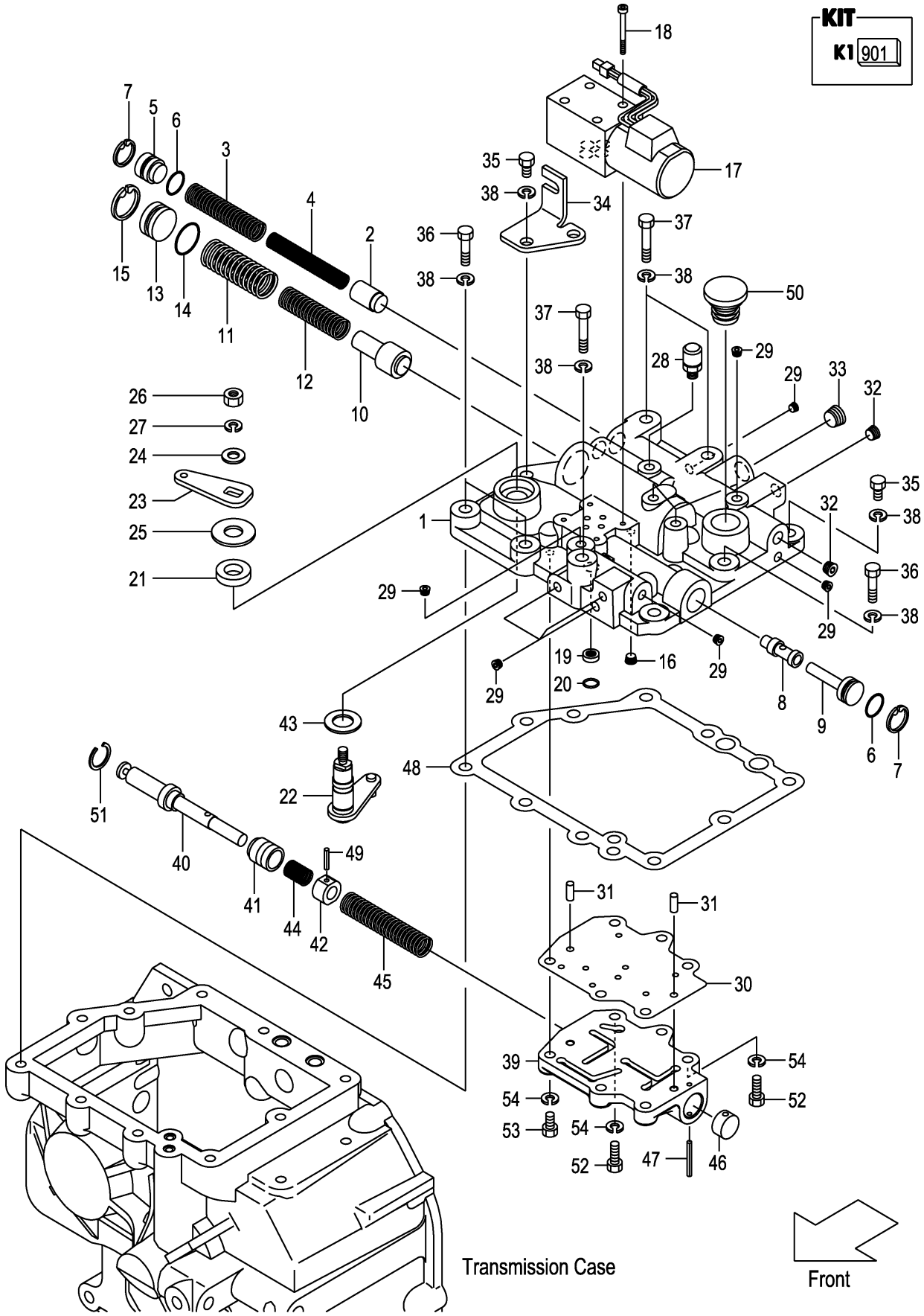

A:FD30T3Z

Item No	Part No.	Mark	Description		Req'd	Remarks : Serial No.
47	02270-04035	*	PIN,SPRING	ﾋﾟﾝ	1	
48	12N53-82701	*	GASKET,CASE-COVER	ｶﾞｽｹｯﾄ	1	
49	02270-04020		PIN,SPRING	ﾋﾟﾝ	1	
50	12N53-82751		CAP,OIL	ｷｬｯﾌﾟ	1	
51	12N53-82791	*	RING,SNAP	ｽﾅｯﾌﾟﾘﾝｸﾞ	1	
52	01103-08040		BOLT	ﾎﾞﾙﾄ	2	
53	01103-08030		BOLT	ﾎﾞﾙﾄ	4	
54	02011-00008		WASHER	ﾜｯｼｬ	6	

M E M O

M E M O

FIG.64 DRIVE AXLE

(F7Z33010) ﾄﾞﾗｲﾌﾞｱｸｽﾙ

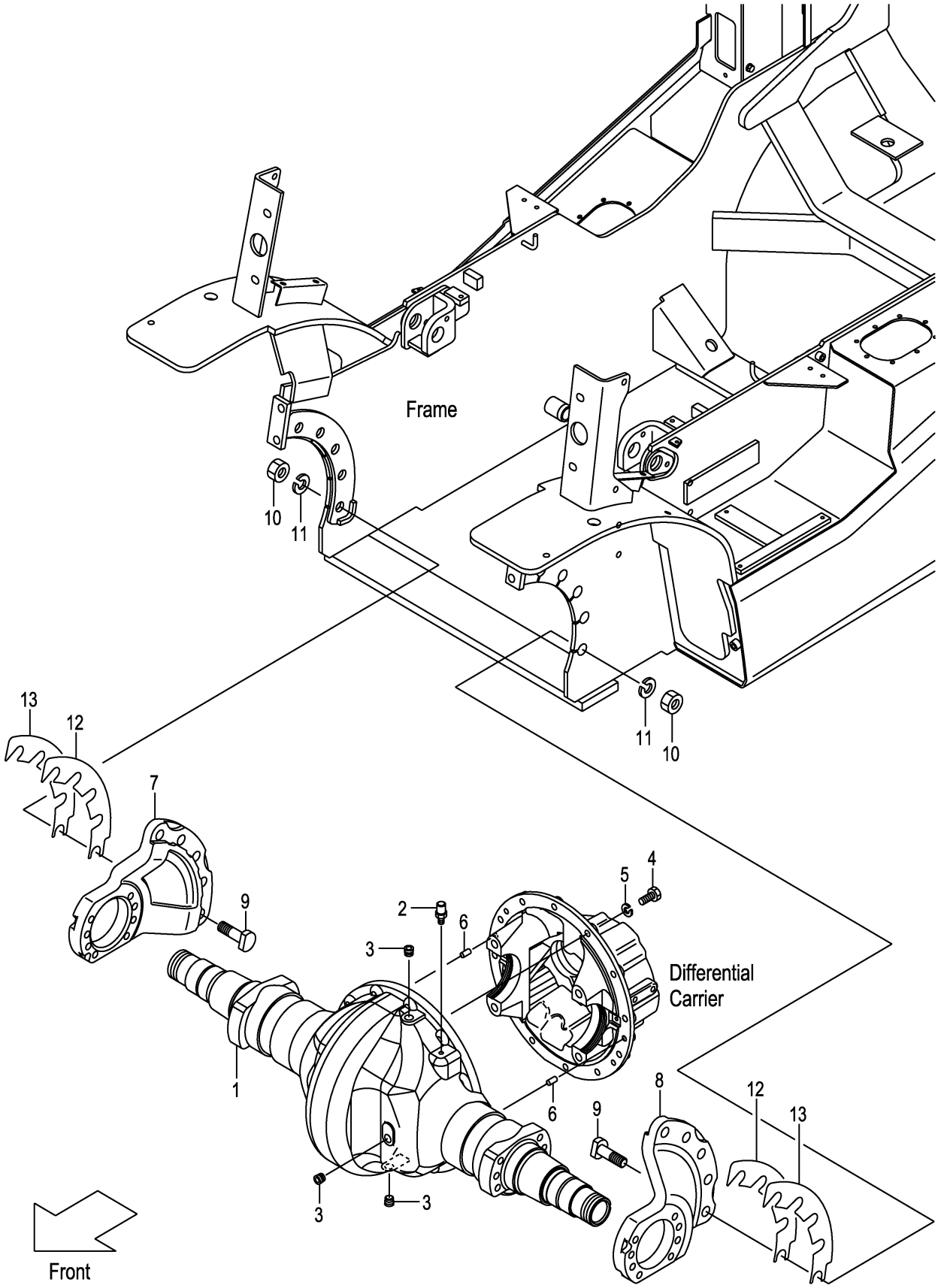

A:FD30C3Z FD30T3Z

Item No	Part No.	Mark	Description		Req'd	Remarks : Serial No.
1	22N93-00302		HOUSING,AXLE	ﾊｳｼﾞﾝｸﾞ	1	
2	15573-42151		BREATHER,AIR	ﾌﾞﾘｰｻﾞ	1	
3	22193-03001		PLUG	ﾌﾟﾗｸﾞ	3	
4	01106-12040		BOLT	ﾎﾞﾙﾄ	12	
5	02011-00012		WASHER	ﾜｯｼｬ	12	
6	02212-10020		PIN,PARALLEL	ﾋﾟﾝ	2	
7	22N93-00602		SUPPORT,AXLE,RH	ｻﾎﾟｰﾄ	1	
8	22N93-00612		SUPPORT,AXLE,LH	ｻﾎﾟｰﾄ	1	
9	22N53-02151		BOLT	ﾎﾞﾙﾄ	10	
10	01400-10020		NUT	ﾅｯﾄ	10	
11	02010-00020		WASHER	ﾜｯｼｬ	10	
12	22N53-02601		SHIM,SUPPORT,T-0.5	ｼﾑ	2	110-
13	22N53-02611		SHIM,SUPPORT,T-1.0	ｼﾑ	2	110-

FIG.65 DRUM HUB

(F7Z33020) ﾄﾞﾗﾑﾊﾌﾞ

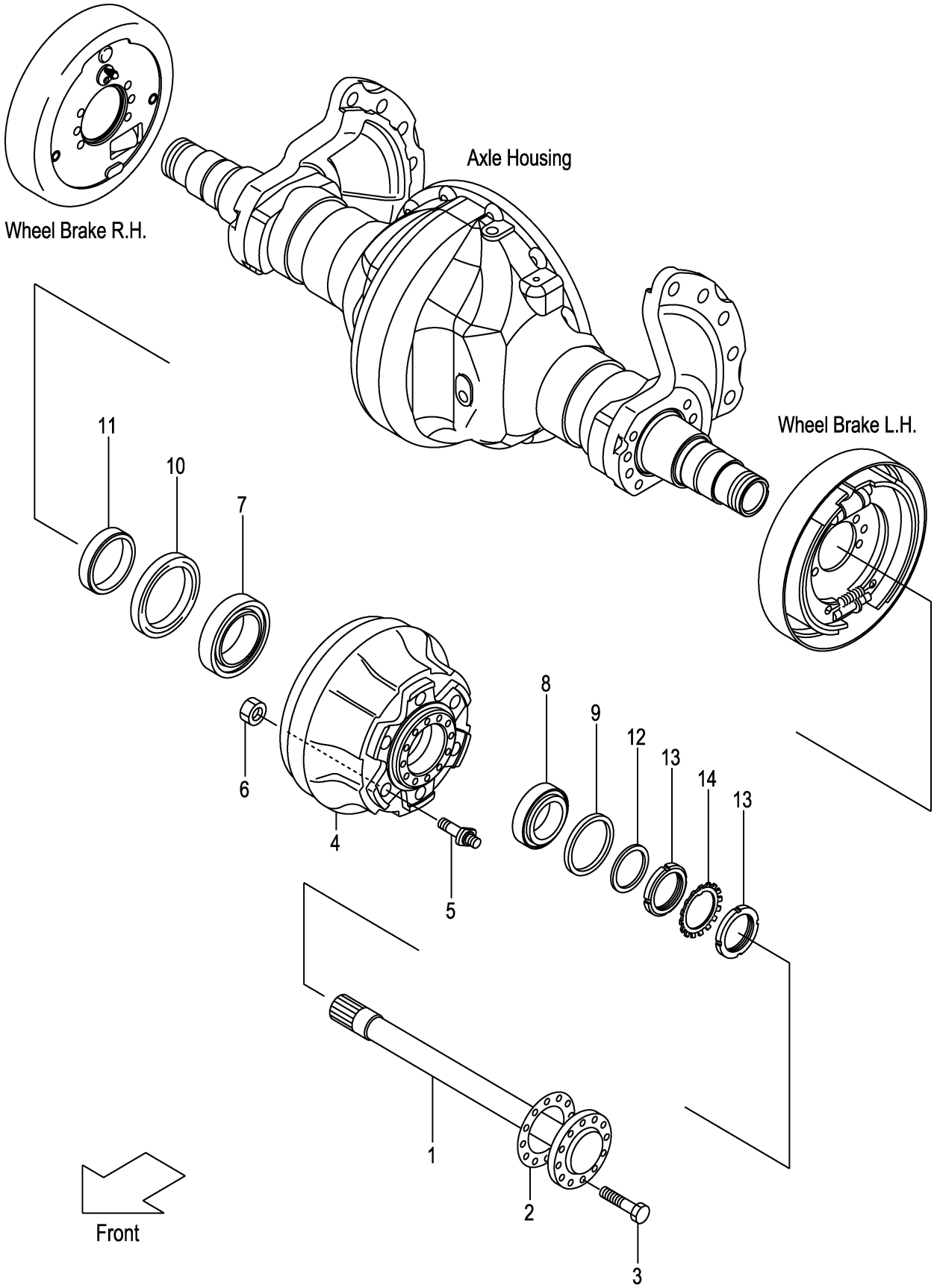

A:FD30C3Z FD30T3Z

Item No	Part No.	Mark	Description		Req'd	Remarks : Serial No.
1	214J3-02011		SHAFT,DRIVE	ｼｬﾌﾄ	2	
2	24453-02102		PACKING	ﾊﾟｯｷﾝｸﾞ	2	
3	24453-02061		BOLT,REAMER	ﾎﾞﾙﾄ	24	
4	22N93-02001		HUB & DRUM	ﾊﾌﾞ&ﾄﾞﾗﾑ	2	
5	25303-02102		BOLT,HUB	ﾎﾞﾙﾄ	12	
6	01400-10020		NUT	ﾅｯﾄ	12	
7	03071-30214		BEARING,TAPER-ROLLER	ﾍﾞｱﾘﾝｸﾞ	2	
8	23453-02071		BEARING,TAPER-ROLLER	ﾍﾞｱﾘﾝｸﾞ	2	INC.9
9	23453-02131		SEAL,OIL	ｼｰﾙ	2	
10	03211-09501		SEAL,OIL	ｼｰﾙ	2	
11	22N53-02071		RETAINER,OIL-SEAL	ﾘﾃｰﾅ	2	
12	23453-02091		WASHER	ﾜｯｼｬ	2	
13	03192-00012		NUT,BEARING	ﾅｯﾄ	4	
14	03192-10012		WASHER,BEARING	ﾜｯｼｬ	2	

FIG.66 PROPELLER SHAFT

(F7Z33310) ﾌﾟﾛﾍﾟﾗｼｬﾌﾄ

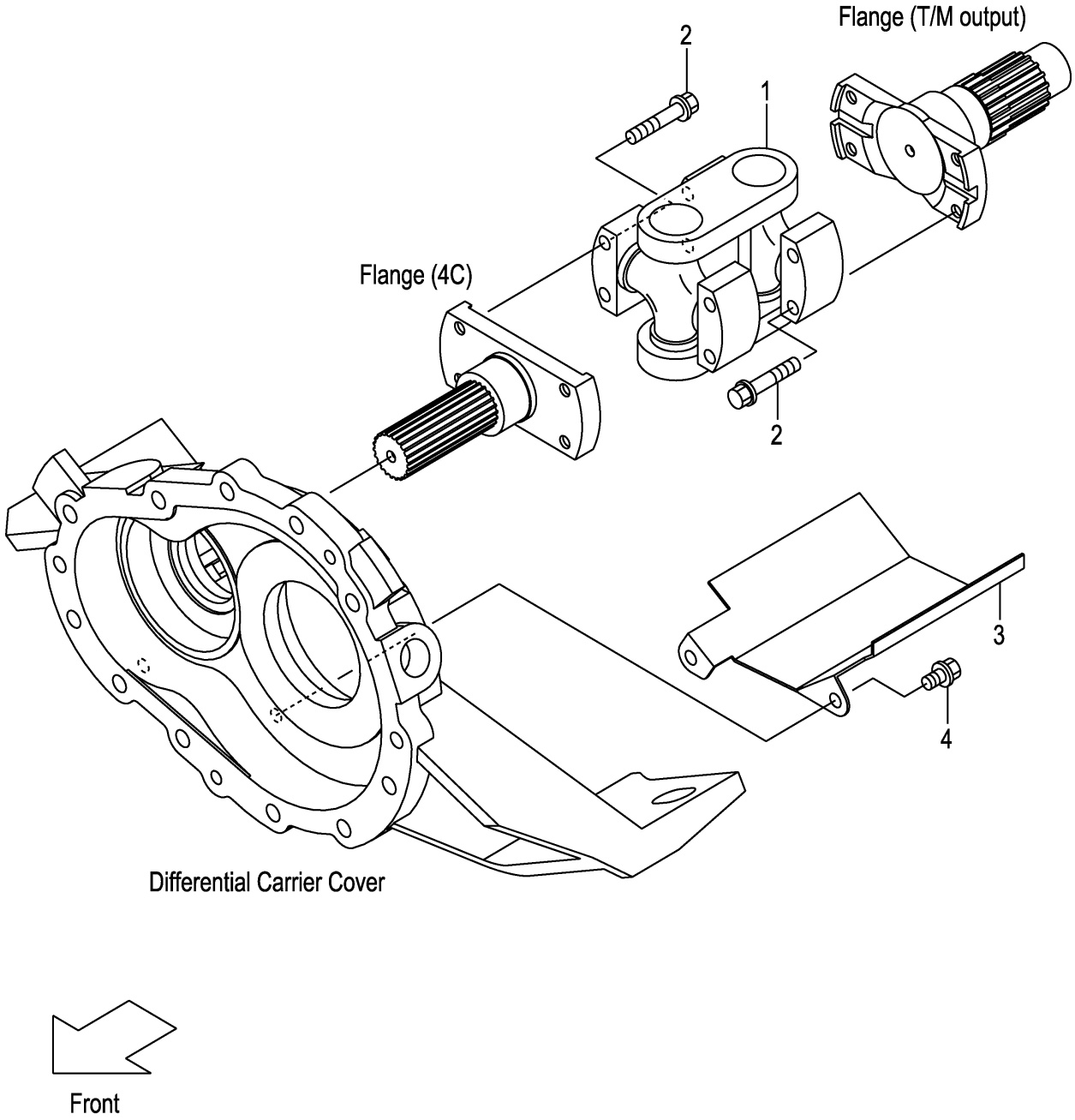

A:FD30C3Z FD30T3Z

Item No	Part No.	Mark	Description	Req'd	Remarks : Serial No.
1	12N53-32001		SHAFT,PROPELLER ｼｬﾌﾄ	1	
2	12N53-82641		BOLT,FLANGE ﾎﾞﾙﾄ	8	
3	12N53-32011		COVER,PROPEL-SHAFT ｶﾊﾞｰ	1	
4	12N53-82621		BOLT,FLANGE ﾎﾞﾙﾄ	2	

FIG.67 REDUCTION & DIFFERENTIAL

(F7Z33510) ﾘﾀﾞｸｼｮﾝ&ﾃﾞｨﾌｧﾚﾝｼｬﾙ

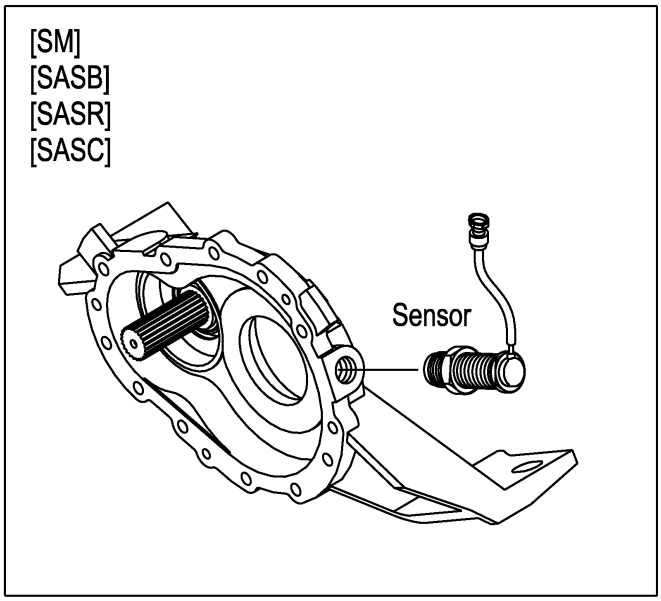

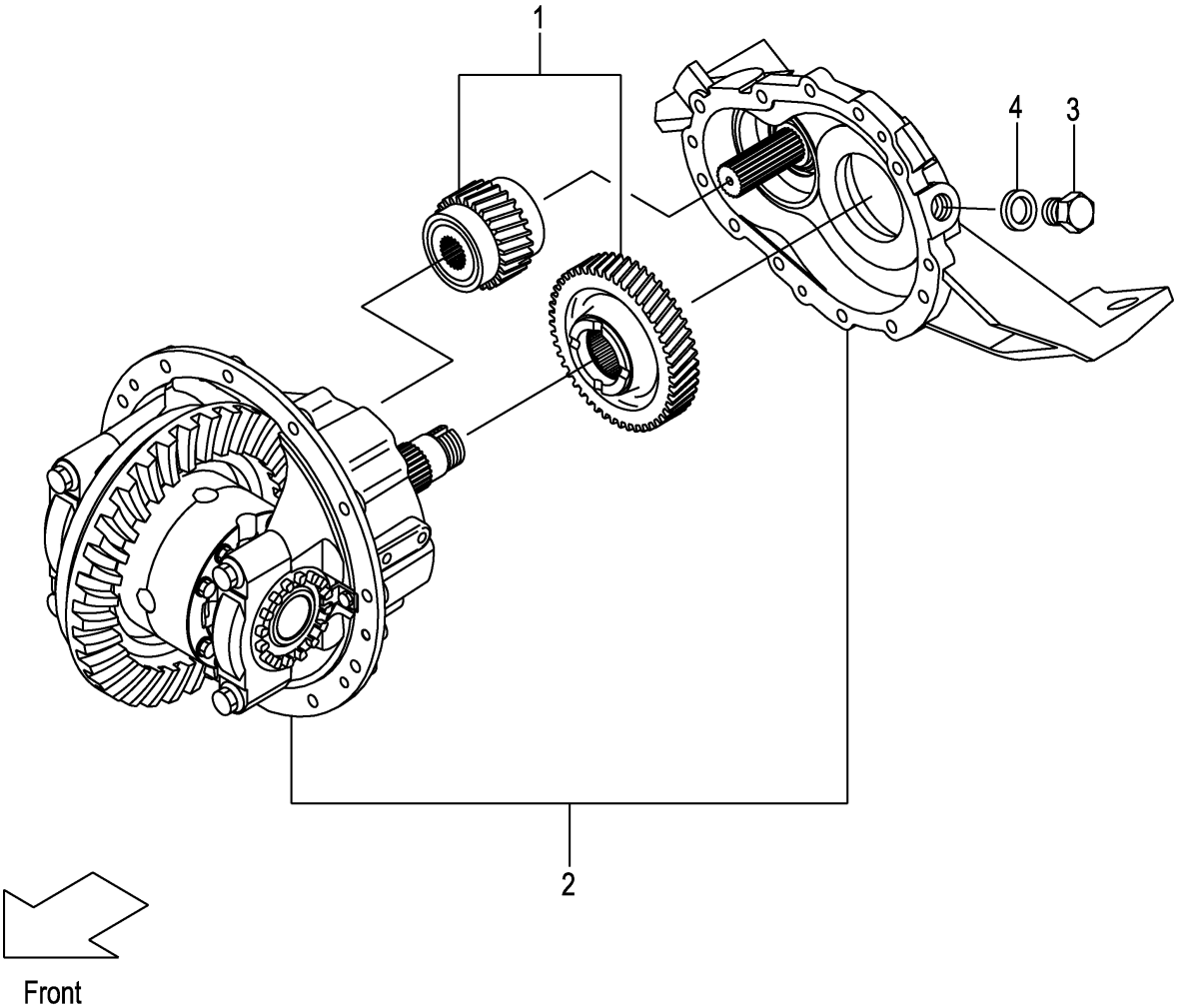

FIG.67

(F7Z33510)

A:FD30C3Z FD30T3Z

Item No	Part No.	Mark	Description		Req'd	Remarks : Serial No.
A1	12N53-50201		DIFFERENTIAL-ASSY	ﾃﾞﾌｧﾚﾝｼｬﾙｱｯｾﾝ	1	INC.1,2
-	12N53-50231		DIFFERENTIAL-ASSY	ﾃﾞﾌｧﾚﾝｼｬﾙｱｯｾﾝ	1	[DNS] INC.1,2
1	NO PART NO.		REDUCTION	ﾘﾀﾞｸｼｮﾝ	1	SEE FIG.68
2	NO PART NO.		DIFFERENTIAL	ﾃﾞﾌｧﾚﾝｼｬﾙ	1	SEE FIG.69
-	NO PART NO.		DIFFERENTIAL	ﾃﾞﾌｧﾚﾝｼｬﾙ	1	[DNS]SEE FIG.69
3	124T3-42651		BOLT	ﾎﾞﾙﾄ	1	(WITHOUT SM,SASB,SASR,SASC)
4	124T3-42661		PACKING	ﾊﾟｯｷﾝｸﾞ	1	(WITHOUT SM,SASB,SASR,SASC)

FIG.68 REDUCTION

(F7Z33520) ﾘﾀﾞｸｼｮﾝ

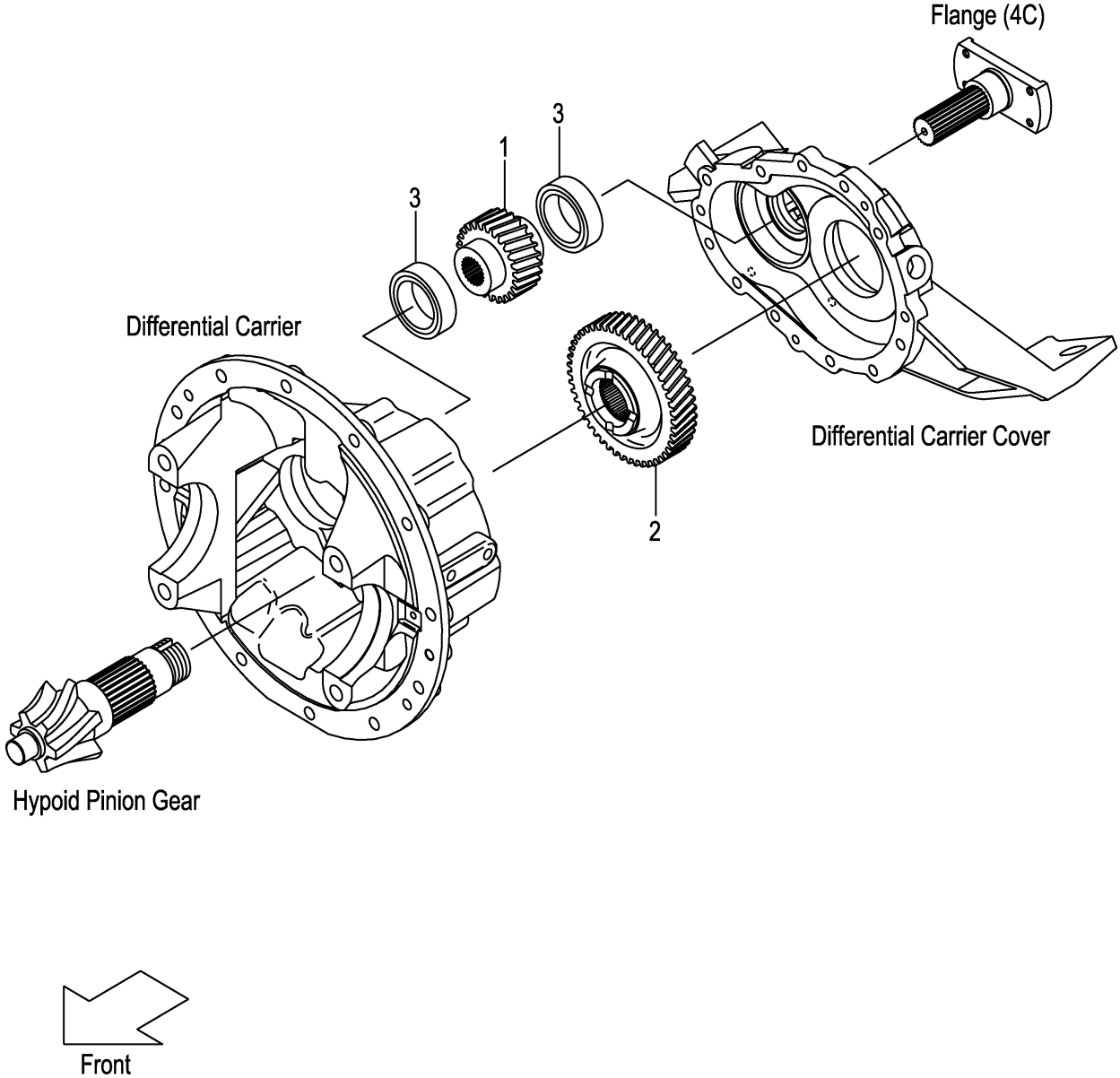

FIG.68

(F7Z33520)

A:FD30C3Z FD30T3Z

Item No	Part No.	Mark	Description	Req'd	Remarks : Serial No.
1	12N53-22001		GEAR,REDUCTION ｷﾞﾔｰ	1	
2	12N53-22011		GEAR,REDUCTION ｷﾞﾔｰ	1	
3	03000-06210		BEARING,BALL ﾍﾞｱﾘﾝｸﾞ	2	

FIG.69 DIFFERENTIAL

(F7Z33530) ﾃﾞｨﾌｧﾚﾝｼｬﾙ

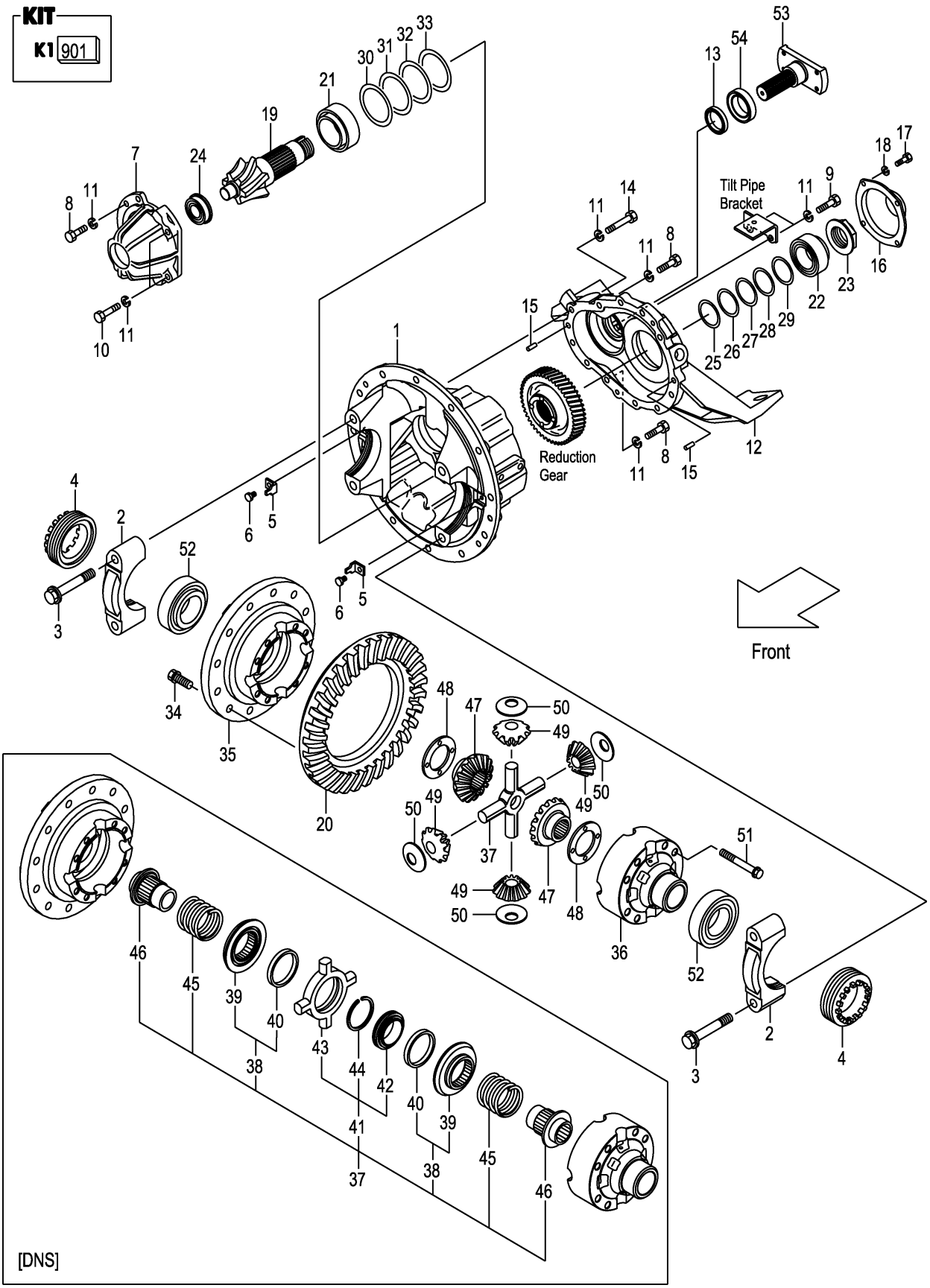

A:FD30C3Z FD30T3Z

Item No	Part No.	Mark	Description		Req'd	Remarks : Serial No.
901	12N53-59821	K1	KIT,OVERHAUL,DIFF	ｵｰﾊﾞﾎｰﾙｷｯﾄ	1	INC.5,13,23,25-33,48,50
A1	12N53-50301		CARRIER & CAP-ASSY	ｷｬﾘﾔ&ｷｬｯﾌﾟｱｯｾﾝ	1	INC.1-3
1	NO PART NO.	#	CARRIER,DIFFERENTIAL	ｷｬﾘﾔ	1	
2	NO PART NO.	#	CAP,BEARING	ｷｬｯﾌﾟ	2	
3	12N53-52131		BOLT,REAMER	ﾎﾞﾙﾄ	4	
4	12N53-52081		NUT,ADJUST	ﾅｯﾄ	2	
5	12N53-52141	*	PLATE,LOCK	ﾌﾟﾚｰﾄ	2	
6	12N53-82621		BOLT,FLANGE	ﾎﾞﾙﾄ	2	
7	12N53-52061		SUPPORT,BEARING	ｻﾎﾟｰﾄ	1	
8	01106-10030		BOLT	ﾎﾞﾙﾄ	6	
9	01106-10035		BOLT	ﾎﾞﾙﾄ	2	
10	01106-10045		BOLT	ﾎﾞﾙﾄ	2	
11	02011-00010		WASHER	ﾜｯｼｬ	17	
12	12N53-52031		COVER,DIFF-CARRIER	ｶﾊﾞｰ	1	
13	12N53-52251	*	SEAL,OIL	ｼｰﾙ	1	
14	01106-10060		BOLT	ﾎﾞﾙﾄ	7	
15	02212-10020		PIN,PARALLEL	ﾋﾟﾝ	2	
16	12N53-52111		COVER,PINION	ｶﾊﾞｰ	1	
17	01103-08016		BOLT	ﾎﾞﾙﾄ	4	
18	02011-00008		WASHER	ﾜｯｼｬ	4	
A2	12N53-59801		GEAR-ASSY,HYPOID	ﾊｲﾎﾟｲﾄﾞｷﾞﾔｰｱｯｾﾝ	1	INC.19,20
19	NO PART NO.	#	GEAR,PINION,LH	ｷﾞﾔｰ	1	
20	NO PART NO.	#	GEAR,RING,RH	ｷﾞﾔｰ	1	
21	14603-52131		BEARING,TAPER-ROLLER	ﾍﾞｱﾘﾝｸﾞ	1	
22	12N53-52231		BEARING,TAPER-ROLLER	ﾍﾞｱﾘﾝｸﾞ	1	
23	12N53-52101	*	NUT,PINION	ﾅｯﾄ	1	
24	12N53-52341		BEARING,ROLLER	ﾍﾞｱﾘﾝｸﾞ	1	
25	12N53-52171	*	SHIM,T-0.1	ｼﾑ	1	
26	12N53-52271	*	SHIM,T-0.15	ｼﾑ	1	
27	12N53-52181	*	SHIM,T-0.2	ｼﾑ	2	
28	12N53-52191	*	SHIM,T-0.5	ｼﾑ	1	
29	12N53-52351	*	SHIM,T-0.125	ｼﾑ	1	
30	12N53-52201	*	SHIM,T-0.1	ｼﾑ	1	
31	12N53-52291	*	SHIM,T-0.15	ｼﾑ	1	
32	12N53-52211	*	SHIM,T-0.2	ｼﾑ	2	
33	12N53-52221	*	SHIM,T-0.5	ｼﾑ	1	
34	12N53-52151		BOLT,FLANGE	ﾎﾞﾙﾄ	12	
A3	12N53-59811		CASE-ASSY,CROSS	ｸﾛｽｹｰｽｱｯｾﾝ	1	INC.35,36
35	NO PART NO.	#	CASE,CROSS,RH	ｹｰｽ	1	
36	NO PART NO.	#	CASE,CROSS,LH	ｹｰｽ	1	
37	124G3-52011		SPIDER	ｽﾊﾟｲﾀﾞ	1	
-	12N53-52381		NOSPIN-ASSY	ﾉｰｽﾋﾟﾝ	1	[DNS] INC.38-46
38	12N53-52431		CLUTCH,DRIVEN	ｸﾗｯﾁ	2	[DNS] INC.39,40
39	12N53-52441		CLUTCH,DRIVEN	ｸﾗｯﾁ	2	[DNS]
40	12N53-52451		RING,HOLDOUT	ﾘﾝｸﾞ	2	[DNS]
41	12N53-52461		SPIDER	ｽﾊﾟｲﾀﾞ	1	[DNS] INC.42-44
42	12N53-52471		CAM,CENTER	ｶﾑ	1	[DNS]
43	12N53-52481		SPIDER	ｽﾊﾟｲﾀﾞ	1	[DNS]
44	12N53-52491		RING,SNAP	ｽﾅｯﾌﾟﾘﾝｸﾞ	1	[DNS]
45	12N53-52501		SPRING	ｽﾌﾟﾘﾝｸﾞ	2	[DNS]

FIG.69 DIFFERENTIAL

(F7Z33530) ﾃﾞｨﾌｧﾚﾝｼｬﾙ

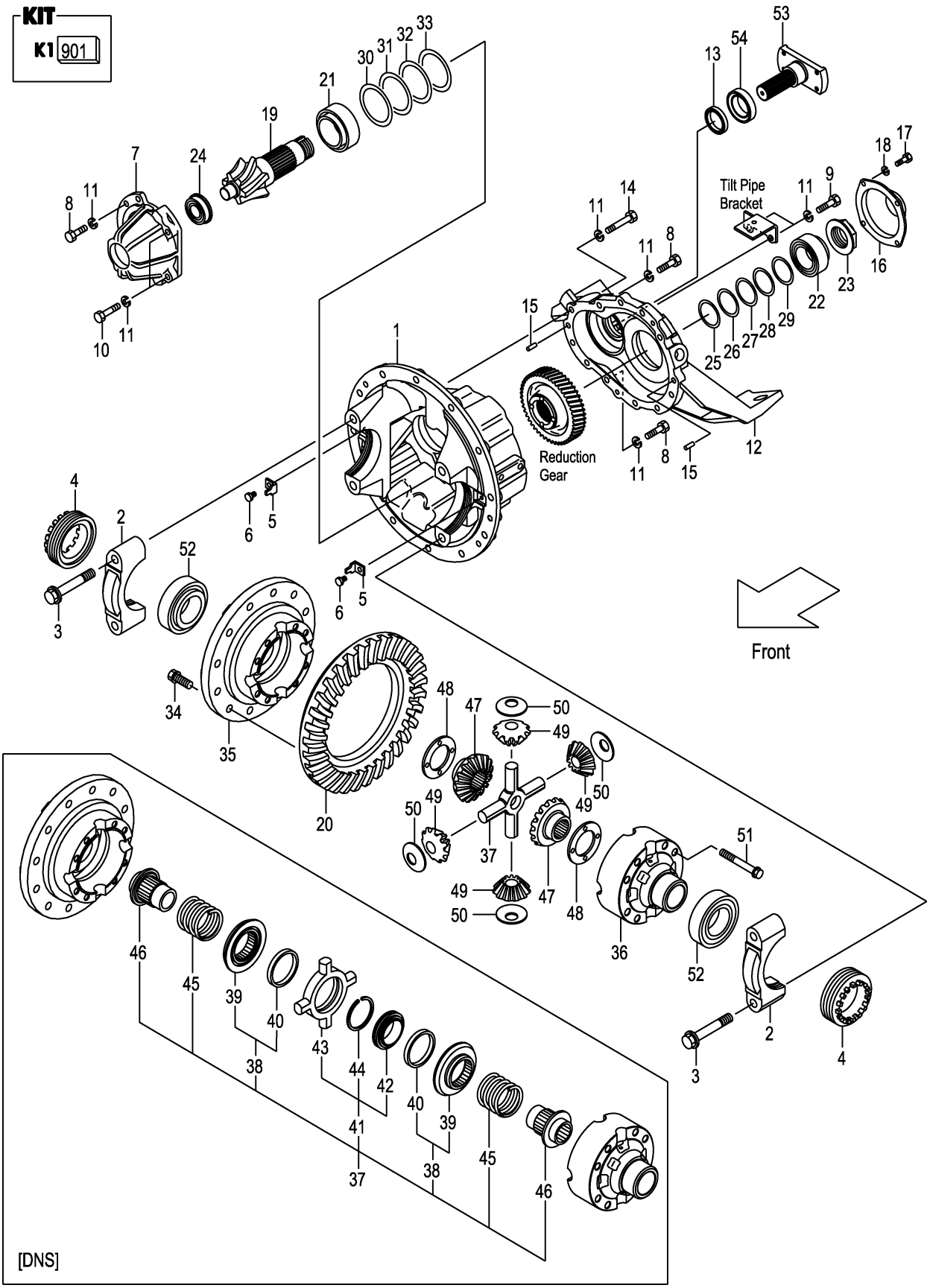

A:FD30C3Z FD30T3Z

Item No	Part No.	Mark	Description		Req'd	Remarks : Serial No.
46	12N53-52511		GEAR,SIDE	ｷﾞﾔｰ	2	[DNS]
47	134A3-52041		GEAR,SIDE	ｷﾞﾔｰ	2	(WITHOUT DNS)
48	16113-52141	*	WASHER,THRUST	ﾜｯｼｬ	2	(WITHOUT DNS)
49	134A3-52051		GEAR,PINION	ｷﾞﾔｰ	4	(WITHOUT DNS)
50	16113-52121	*	WASHER,THRUST	ﾜｯｼｬ	4	(WITHOUT DNS)
51	12N53-52161		BOLT,FLANGE	ﾎﾞﾙﾄ	8	
52	12N53-52241		BEARING,TAPER-ROLLER	ﾍﾞｱﾘﾝｸﾞ	2	
53	12N53-52091		FLANGE,4C	ﾌﾗﾝｼﾞ	1	
54	12N53-52121		COVER,DUST	ｶﾊﾞｰ	1	

M E M O

M E M O

FIG.70 WHEEL BRAKE

(F7Z33710) ホイールブレーキ

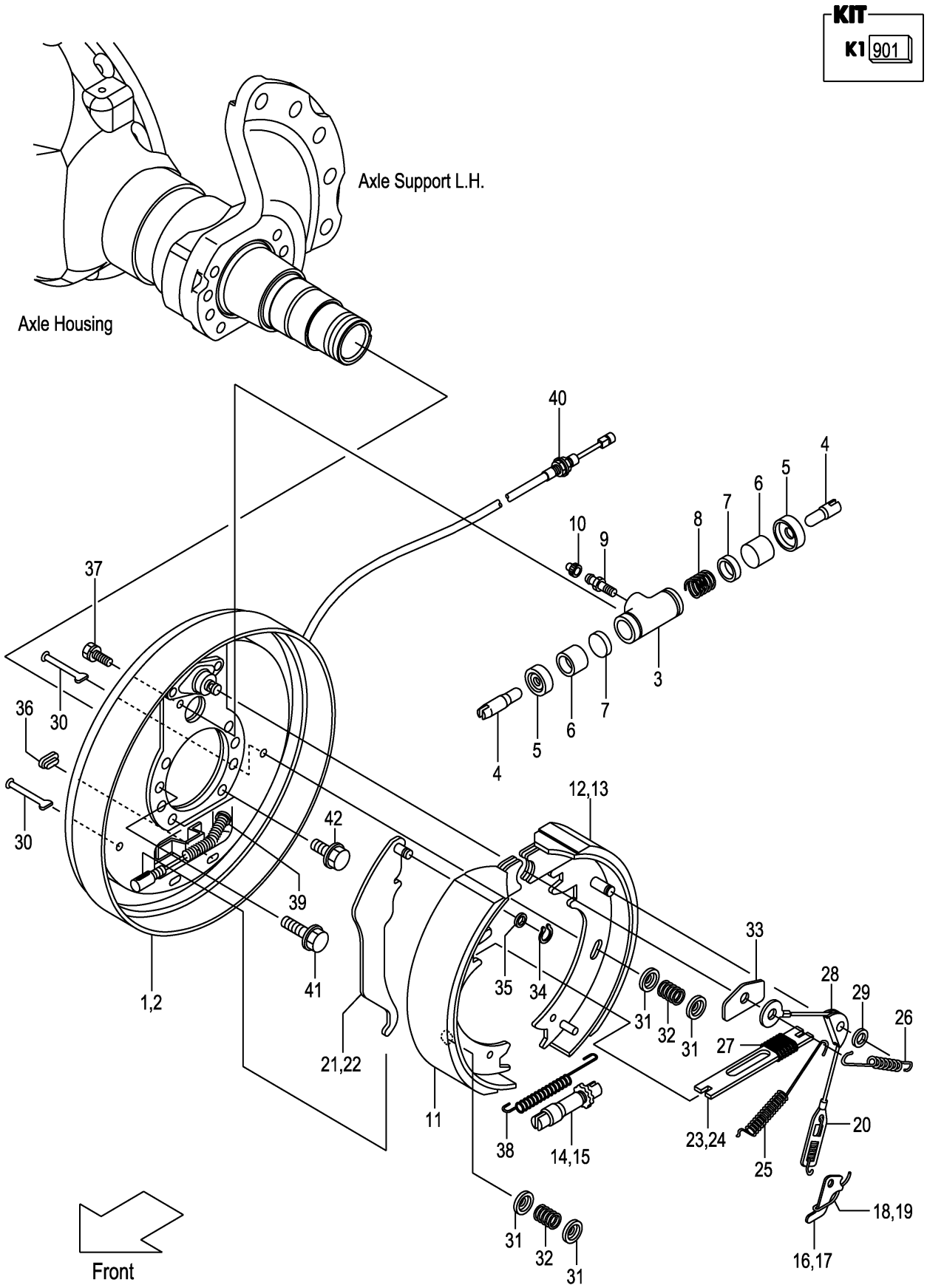

A:FD30C3Z FD30T3Z

Item No	Part No.	Mark	Description		Req'd	Remarks : Serial No.
A1	22N93-70101		BRAKE-ASSY,RH	ﾌﾞﾗｹｯﾄｱｯｾﾝ	1	INC.1,3-12,14,16,18,20,21, 23,25-40
A2	22N93-70201		BRAKE-ASSY,LH	ﾌﾞﾗｹｯﾄｱｯｾﾝ	1	INC.2-11,13,15,17,19,20,22, 24-40
1	C-52-13117-21000-S		PLATE,BACK,RH	ﾌﾟﾚｰﾄ	1	
2	C-52-13117-11000-S		PLATE,BACK,LH	ﾌﾟﾚｰﾄ	1	
A3	C-52-13117-52000		CYL-ASSY,WHEEL	ﾎｲｰﾙｼﾘﾝﾀﾞｱｯｾﾝ	2	INC.3-10
901	C-K2-11242-52000	K1	KIT,WHEEL-CYL	ﾎｲｰﾙｼﾘﾝﾀﾞｷｯﾄ	2	INC.5,7,8
3	NO PART NO.	#	BODY,WHEEL-CYL	ﾎﾞﾃﾞｨ	2	
4	C-52-11207-02380		LINK,CONNECTING	ﾘﾝｸ	4	
5	NO PART NO.	#*	BOOT	ﾌﾞｰﾂ	4	
6	NO PART NO.	#	PISTON	ﾋﾟｽﾄﾝ	4	
7	NO PART NO.	#*	CUP,WHEEL-CYL	ｶｯﾌﾟ	4	
8	NO PART NO.	#*	SPRING,WHEEL-CYL	ｽﾌﾟﾘﾝｸﾞ	2	
9	C-51-B2101-02322		SCREW,BLEEDER	ｽｸﾘｭ	2	
10	C-52-30780-02340		CAP,BLEEDER-SCREW	ｷｬｯﾌﾟ	2	
11	C-52-13117-53000-Z		SHOE & LINING	ｼｭｰ&ﾗｲﾆﾝｸﾞ	2	
12	C-52-13117-83020-Z		SHOE & LINING,RH	ｼｭｰ&ﾗｲﾆﾝｸﾞ	1	
13	C-52-13117-83010-Z		SHOE & LINING,LH	ｼｭｰ&ﾗｲﾆﾝｸﾞ	1	
14	C-52-13117-23300-P		ADJUSTER,RH	ｱｼﾞｬｽﾀ	1	
15	C-52-13117-13300-P		ADJUSTER,LH	ｱｼﾞｬｽﾀ	1	
16	C-52-11218-25152		LEVER,RH	ﾚﾊﾞｰ	1	
17	C-52-11218-15152		LEVER,LH	ﾚﾊﾞｰ	1	
18	C-52-11218-25161		SPRING,RH	ｽﾌﾟﾘﾝｸﾞ	1	
19	C-52-11218-15161		SPRING,LH	ｽﾌﾟﾘﾝｸﾞ	1	
20	C-52-11227-05094		SPRING & CABLE	ｽﾌﾟﾘﾝｸﾞ&ｹｰﾌﾞﾙ	2	
21	C-52-11218-24502		LEVER,PARKING,RH	ﾚﾊﾞｰ	1	
22	C-52-11218-14502		LEVER,PARKING,LH	ﾚﾊﾞｰ	1	
23	C-52-11211-24530		STRUT,RH	ｽﾄﾗｯﾄ	1	
24	C-52-11211-14530		STRUT,LH	ｽﾄﾗｯﾄ	1	
25	C-52-11239-54011		SPRING	ｽﾌﾟﾘﾝｸﾞ	2	
26	C-52-11249-54010		SPRING	ｽﾌﾟﾘﾝｸﾞ	2	
27	C-52-11232-54540		SPRING	ｽﾌﾟﾘﾝｸﾞ	2	
28	C-52-11249-55310		SHEAVE	ｼｰﾌﾞ	2	
29	C-90-2300-1201		WASHER	ﾜｯｼｬ	2	
30	C-52-51308-54160		PIN,SHOE-HOLD	ﾋﾟﾝ	4	
31	C-52-51302-53840		CUP,SHOE-HOLD	ｶｯﾌﾟ	8	
32	C-52-51342-54110		SPRING,SHOE-HOLD	ｽﾌﾟﾘﾝｸﾞ	4	
33	C-52-11239-51270		PLATE,SHOE-GUIDE	ﾌﾟﾚｰﾄ	2	
34	C-52-10901-64560		RETAINER	ﾘﾃｰﾅ	2	
35	C-52-10901-64550		WASHER,WAVE	ﾜｯｼｬ	2	
36	C-52-11204-69010		COVER	ｶﾊﾞｰ	2	
37	C-52-13117-02350		BOLT	ﾎﾞﾙﾄ	4	
38	C-52-11239-54071		SPRING	ｽﾌﾟﾘﾝｸﾞ	2	
39	C-90-9200-0800		E-RING	Eﾘﾝｸﾞ	2	
40	C-52-13124-24600-S		CABLE,PARKING	ｹｰﾌﾞﾙ	2	
41	22N53-02212		BOLT	ﾎﾞﾙﾄ	12	
42	22N53-02201		BOLT	ﾎﾞﾙﾄ	4	

FIG.71 STEERING WHEEL UNIT

(F7Z34110) ｽﾃｱﾘﾝｸﾞﾎｲｰﾙﾕﾆｯﾄ

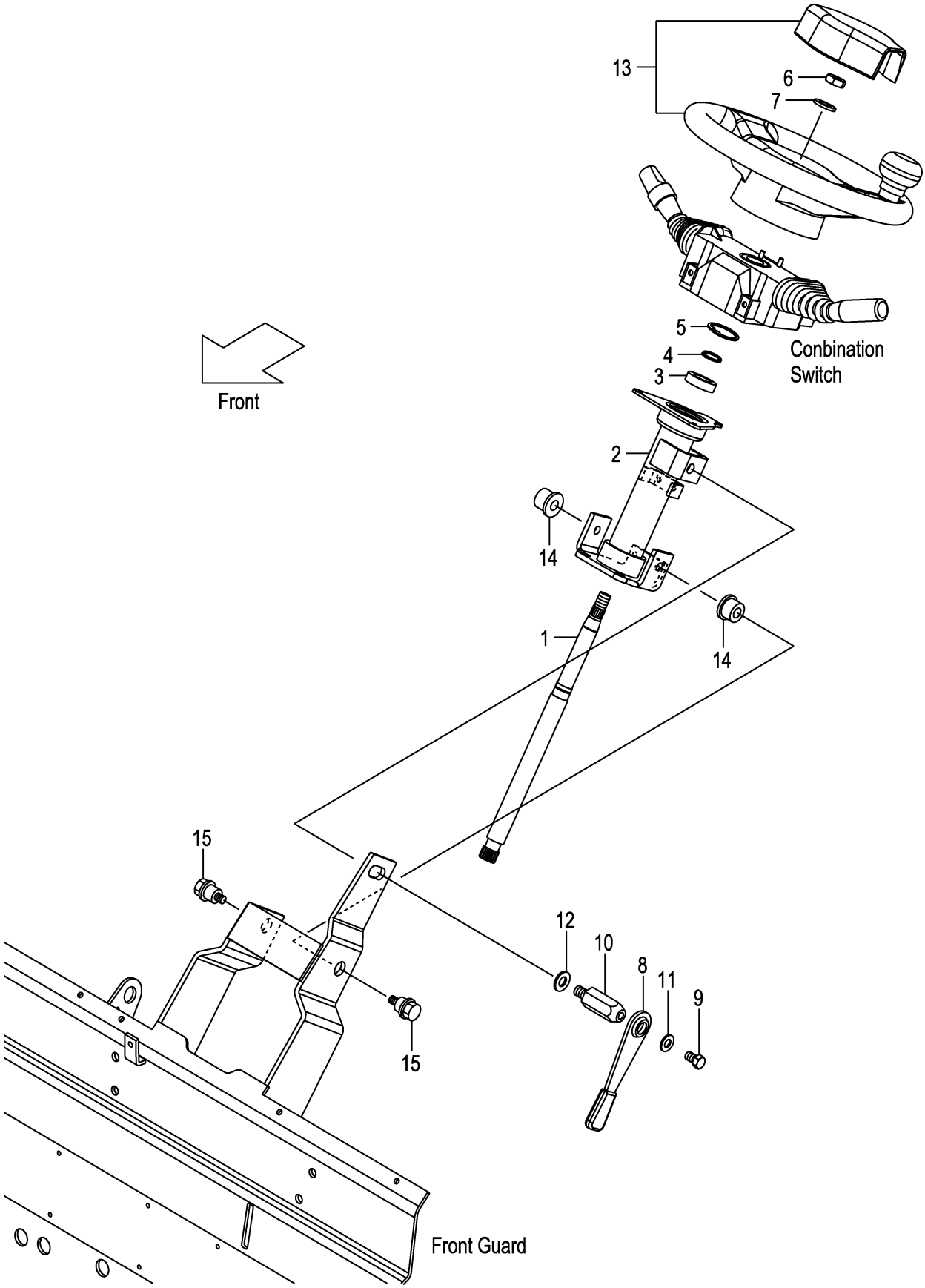

A:FD30C3Z FD30T3Z

Item No	Part No.	Mark	Description		Req'd	Remarks : Serial No.
1	22N54-12011		SHAFT,STEERING	ｼｬﾌﾄ	1	
2	22N54-12021		TUBE,STEERING-COLUMN	ﾁｭｰﾌﾞ	1	1-109
-	22N54-12022		TUBE,STEERING-COLUMN	ﾁｭｰﾌﾞ	1	110-
3	03020-06904		BEARING,BALL	ﾍﾞｱﾘﾝｸﾞ	1	
4	02100-00020		RING,SNAP	ｽﾅｯﾌﾟﾘﾝｸﾞ	1	
5	02110-00037		RING,SNAP	ｽﾅｯﾌﾟﾘﾝｸﾞ	1	
6	01402-10014		NUT	ﾅｯﾄ	1	
7	02000-00014		WASHER	ﾜｯｼｬ	1	
A1	239A4-12402		LEVER-ASSY,TILT-LOCK	ﾃｨﾙﾄﾛｯｸﾚﾊﾞｰｱｯｾﾝ	1	INC.8-11
8	239A4-12411		LEVER	ﾚﾊﾞｰ	1	
9	239A4-12441		BOLT	ﾎﾞﾙﾄ	1	
10	239A4-12431		BOLT,LOCK	ﾎﾞﾙﾄ	1	
11	214A4-12161		WASHER	ﾜｯｼｬ	1	
12	02000-00012		WASHER	ﾜｯｼｬ	1	
13	22N54-10201		WHEEL,STEERING	ﾎｲｰﾙ	1	
14	216G4-12101		BUSHING	ﾌﾞｯｼﾝｸﾞ	2	
15	216G4-12111		BOLT	ﾎﾞﾙﾄ	2	

FIG.72 ORBITROL
(F7Z34120) オービットロール

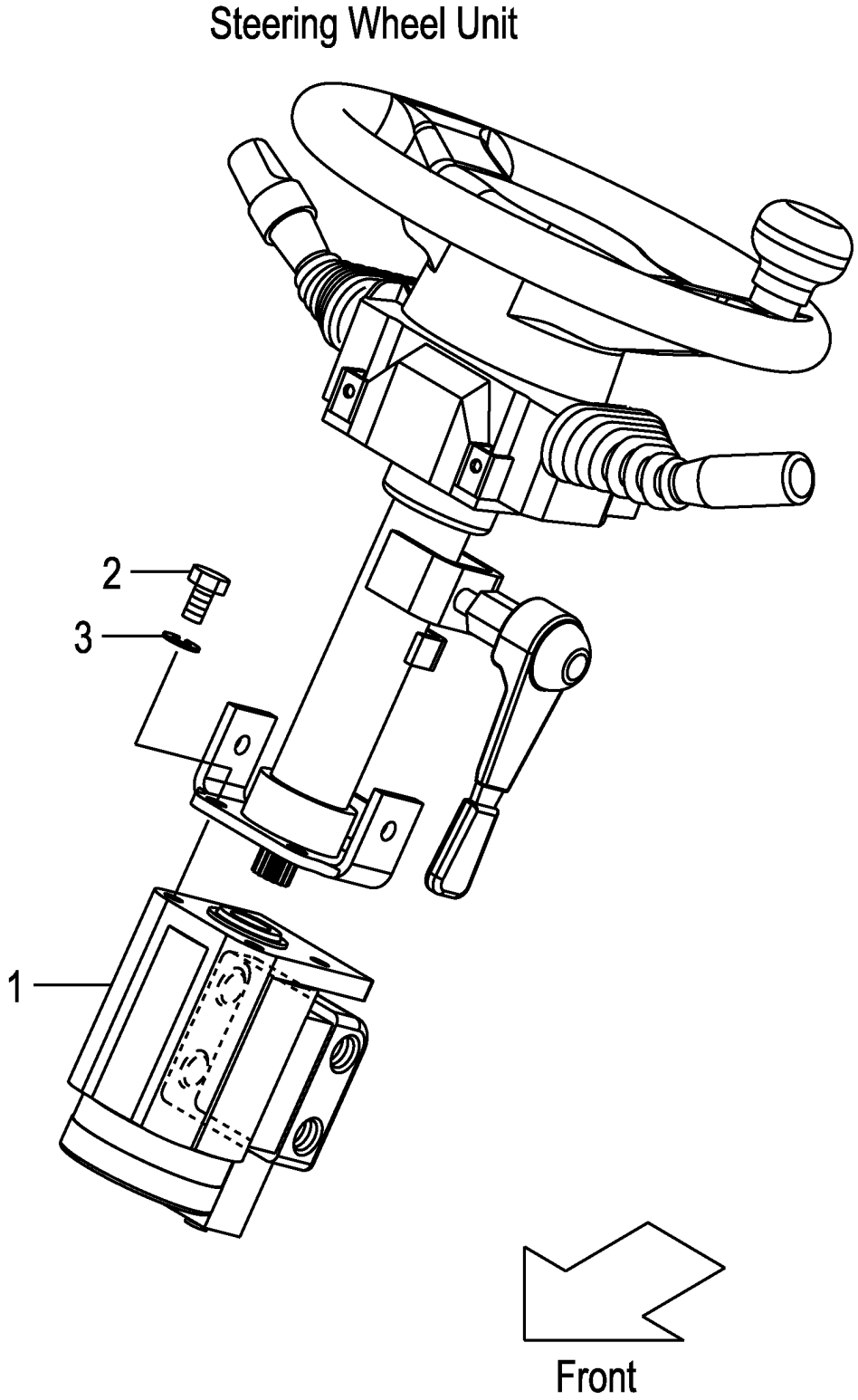

FIG.72

(F7Z34120)

A:FD30C3Z FD30T3Z

Item No	Part No.	Mark	Description		Req'd	Remarks : Serial No.
1	22N54-10301		UNIT,ORBITROL	ﾕﾆｯﾄ	1	
-	22N54-10311		UNIT,ORBITROL	ﾕﾆｯﾄ	1	[VSL]
2	01110-10025		BOLT	ﾎﾞﾙﾄ	4	1-109
-	01113-10035		BOLT	ﾎﾞﾙﾄ	4	110-
3	02011-00010		WASHER	ﾜｯｼｬ	4	

FIG.73 ORBITROL FITTING

(F7Z34140) オービットロールフィッティング

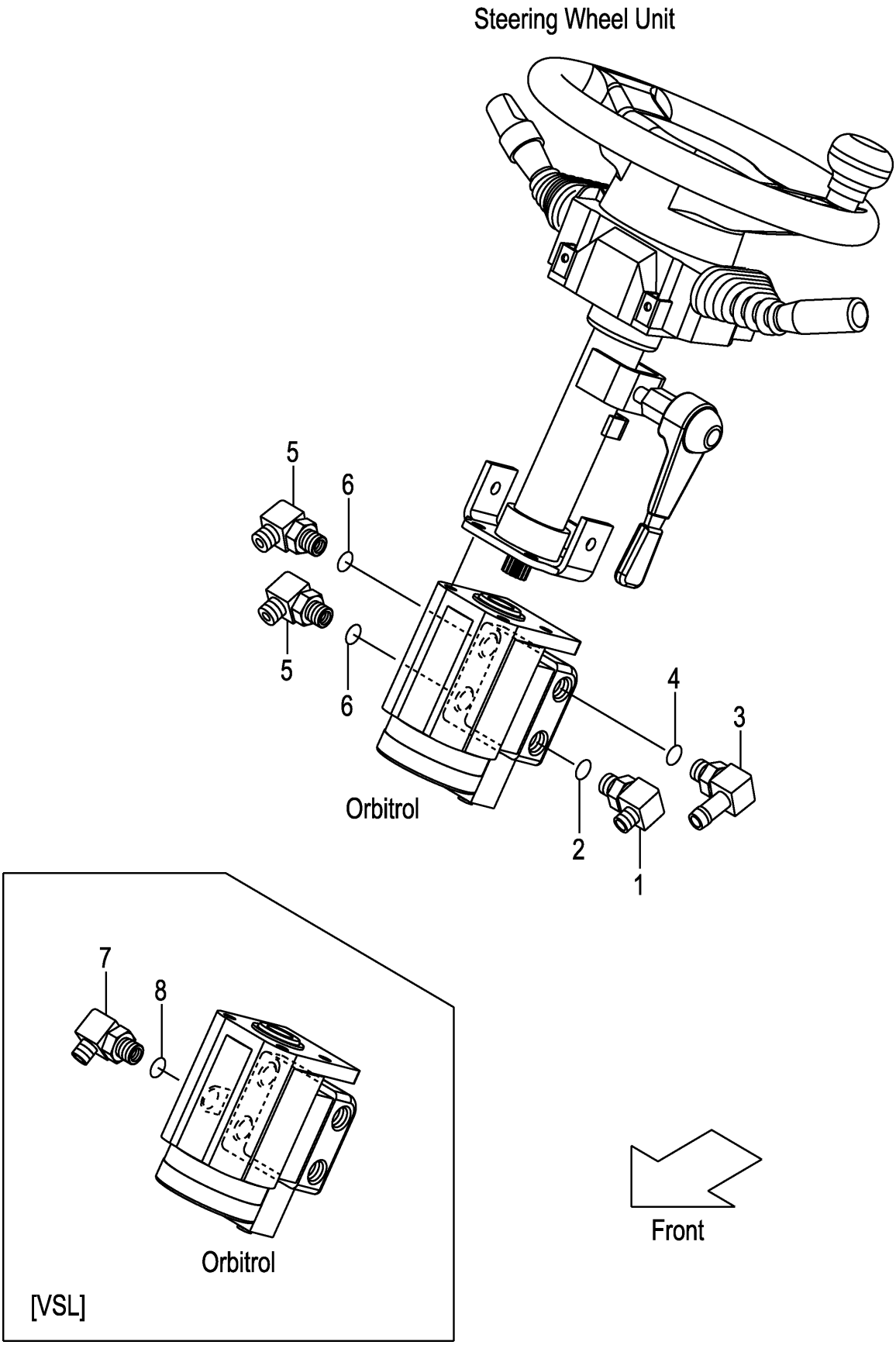

FIG.73

(F7Z34140)

A:FD30C3Z FD30T3Z

Item No	Part No.	Mark	Description		Req'd	Remarks : Serial No.
A1	24237-62331		ELBOW-ASSY	ｴﾙﾎﾞｱｯｾﾝ	1	INC.1,2
1	NO PART NO.	#	ELBOW	ｴﾙﾎﾞ	1	
2	03320-00140		O-RING	Oﾘﾝｸﾞ	1	
A2	243C7-80201		FITTING-ASSY,HOSE	ﾎｰｽﾌｨｯﾃｨﾝｸﾞｱｯｾﾝ	1	INC.3,4
3	NO PART NO.	#	FITTING,HOSE	ﾌｨｯﾃｨﾝｸﾞ	1	
4	03320-00140		O-RING	Oﾘﾝｸﾞ	1	
A3	04150-20303		ELBOW-ASSY	ｴﾙﾎﾞｱｯｾﾝ	2	INC.5,6
5	NO PART NO.	#	ELBOW	ｴﾙﾎﾞ	2	
6	03320-00140		O-RING	Oﾘﾝｸﾞ	2	
A4	04150-20202		ELBOW-ASSY	ｴﾙﾎﾞｱｯｾﾝ	1	[VSL] INC.7,8
7	NO PART NO.	#	ELBOW	ｴﾙﾎﾞ	1	[VSL]
8	03320-00110		O-RING	Oﾘﾝｸﾞ	1	[VSL]

FIG.74 STEERING AXLE

(F7Z34310) ステアリング゛アクスル

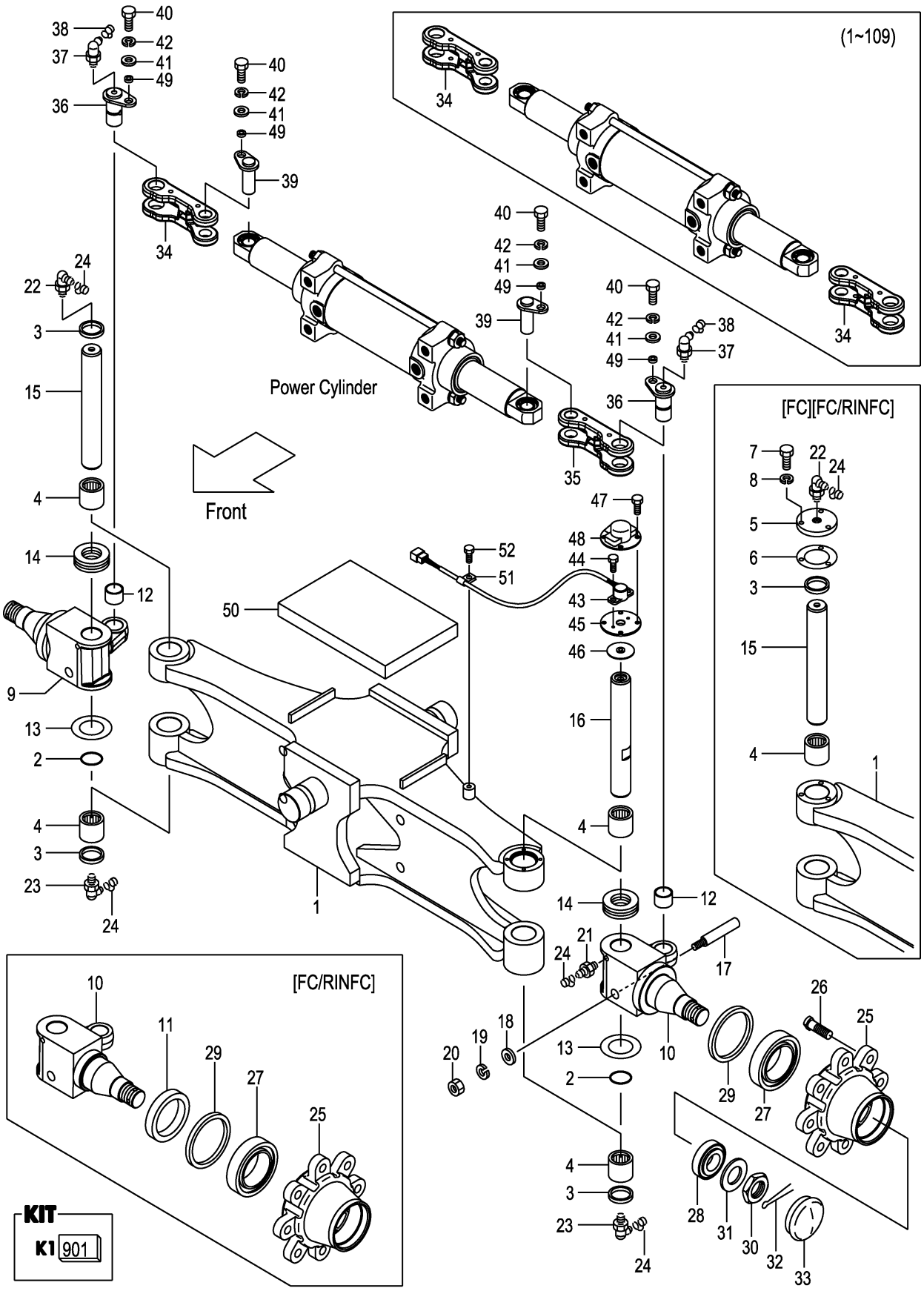

A:FD30C3Z FD30T3Z

Item No	Part No.	Mark	Description		Req'd	Remarks : Serial No.
A1	22N54-30101		AXLE-ASSY,STEERING	ｽﾃｱﾘﾝｸﾞｱｸｽﾙｱｯｾﾝ	1	1-109
						INC.1-4,9,10,12-33
-	22N54-30102		AXLE-ASSY,STEERING	ｽﾃｱﾘﾝｸﾞｱｸｽﾙｱｯｾﾝ	1	110-
						INC.1-4,9,10,12-33
-	52N53-70101		AXLE-ASSY,STEERING	ｽﾃｱﾘﾝｸﾞｱｸｽﾙｱｯｾﾝ	1	1-109
						[FC] INC.1-10,12-33
-	52N53-70102		AXLE-ASSY,STEERING	ｽﾃｱﾘﾝｸﾞｱｸｽﾙｱｯｾﾝ	1	110-
						[FC] INC.1-10,12-33
-	52N53-70201		AXLE-ASSY,STEERING	ｽﾃｱﾘﾝｸﾞｱｸｽﾙｱｯｾﾝ	1	1-109
						[FC/RINFC] INC.1-33
-	52N53-70202		AXLE-ASSY,STEERING	ｽﾃｱﾘﾝｸﾞｱｸｽﾙｱｯｾﾝ	1	110-
						[FC/RINFC] INC.1-33
901	215E4-39801	K1	KIT,REPAIR	ﾘﾍﾟｱｷｯﾄ	1	INC.2-4,13,14,17-20,22
1	22N54-30121		AXLE,STEERING	ｱｸｽﾙ	1	1-109
-	22N54-30122		AXLE,STEERING	ｱｸｽﾙ	1	110-
-	52N53-70121		AXLE,STEERING	ｱｸｽﾙ	1	1-109
						[FC][FC/RINFC]
-	52N53-70122		AXLE,STEERING	ｱｸｽﾙ	1	110-
						[FC][FC/RINFC]
2	23654-32161	*	O-RING	Oﾘﾝｸﾞ	2	
3	214A4-32161	*	SEAL,DUST	ｼｰﾙ	3	
4	03146-13201	*	BEARING,NEEDLE	ﾍﾞｱﾘﾝｸﾞ	4	
5	514A3-72052		PLATE,CAP	ﾌﾟﾚｰﾄ	1	[FC][FC/RINFC]
6	514A3-72062		PACKING	ﾊﾟｯｷﾝｸﾞ	1	[FC][FC/RINFC]
7	01141-06012		BOLT	ﾎﾞﾙﾄ	3	[FC][FC/RINFC]
8	02010-10006		WASHER	ﾜｯｼｬ	3	[FC][FC/RINFC]
9	22N54-32501		KNUCKLE,RH	ﾅｯｸﾙ	1	
-	52N53-72201		KNUCKLE,RH	ﾅｯｸﾙ	1	[FC/RINFC]
10	22N54-32511		KNUCKLE,LH	ﾅｯｸﾙ	1	
-	52N53-72211		KNUCKLE,LH	ﾅｯｸﾙ	1	[FC/RINFC]
11	514A3-72211		SEAT,OIL-SEAL	ｼｰﾄ	2	[FC/RINFC]
12	22N54-32481		BUSHING	ﾌﾞｯｼﾝｸﾞ	2	
13	22214-30321	*	SHIM	ｼﾑ	6	
14	03126-83201	*	BEARING,THRUST	ﾍﾞｱﾘﾝｸﾞ	2	
15	24454-32232		KINGPIN	ｷﾝｸﾞﾋﾟﾝ	1	
16	22N54-32201		KINGPIN	ｷﾝｸﾞﾋﾟﾝ	1	
17	215E4-32341	*	PIN,LOCK	ﾋﾟﾝ	2	
18	02000-00010	*	WASHER	ﾜｯｼｬ	2	
19	02010-00010	*	WASHER	ﾜｯｼｬ	2	
20	01400-00010	*	NUT	ﾅｯﾄ	2	
21	214A8-52051		FITTING	ﾌｨｯﾃｨﾝｸﾞ	1	
22	04901-00190	*	FITTING	ﾌｨｯﾃｨﾝｸﾞ	1	
23	04901-00191		FITTING	ﾌｨｯﾃｨﾝｸﾞ	2	
24	22199-12401		CAP,NIPPLE	ｷｬｯﾌﾟ	4	
25	214A4-32041		HUB,REAR	ﾊﾌﾞ	2	
26	23654-32041		BOLT,HUB	ﾎﾞﾙﾄ	16	
27	03071-30211		BEARING,TAPER-ROLLER	ﾍﾞｱﾘﾝｸﾞ	2	
28	03071-30207		BEARING,TAPER-ROLLER	ﾍﾞｱﾘﾝｸﾞ	2	
29	03217-08501		SEAL,OIL	ｼｰﾙ	2	
30	01412-00030		NUT,CASTLE	ﾅｯﾄ	2	

FIG.74 STEERING AXLE

(F7Z34310) ステアリング゛アクスル

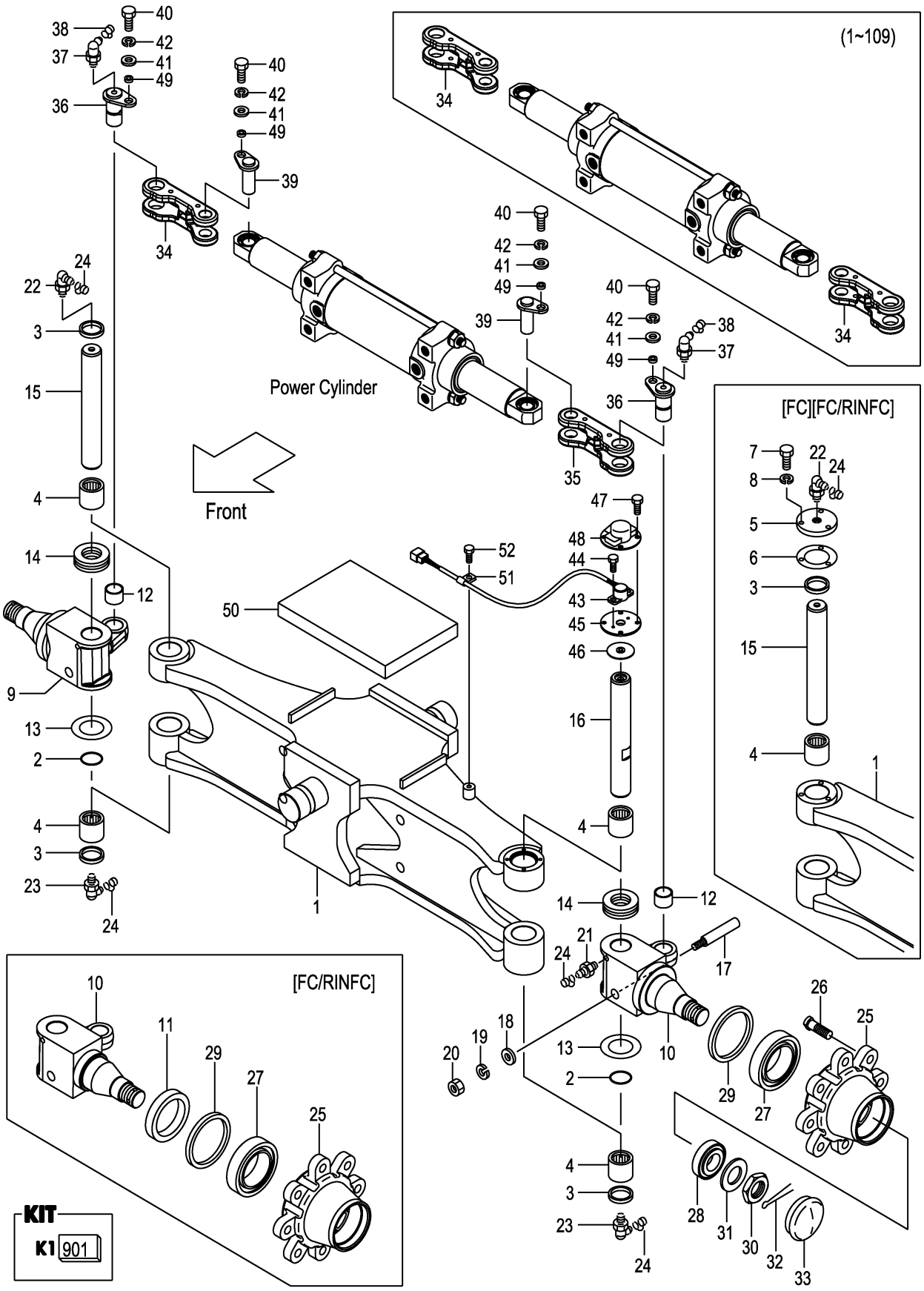

A:FD30C3Z FD30T3Z

Item No	Part No.	Mark	Description		Req'd	Remarks : Serial No.
31	02000-00030		WASHER	ﾜｯｼｬ	2	
32	02200-06055		PIN,COTTER	ﾋﾟﾝ	2	
33	214A4-32051		CAP	ｷｬｯﾌﾟ	2	
34	22N54-32801		YOKE	ﾖｰｸ	2	1-109
-	22N54-32941		YOKE,RH	ﾖｰｸ	1	110-111
-	22N54-32351		YOKE,RH	ﾖｰｸ	1	112-
35	22N54-32971		YOKE,LH	ﾖｰｸ	1	110-111
-	22N54-32361		YOKE,LH	ﾖｰｸ	1	112-
36	22N54-32131		PIN	ﾋﾟﾝ	2	
37	04901-00190		FITTING	ﾌｨｯﾃｨﾝｸﾞ	2	
38	22199-12401		CAP,NIPPLE	ｷｬｯﾌﾟ	2	
39	22N54-32151		PIN	ﾋﾟﾝ	2	
40	01103-08016		BOLT	ﾎﾞﾙﾄ	4	
41	02000-00008		WASHER	ﾜｯｼｬ	4	
42	02011-00008		WASHER	ﾜｯｼｬ	4	
43	22N54-32211		POTENTIOMETER	ﾎﾟﾃﾝｼｵﾒｰﾀ	1	
44	01185-04010		BOLT	ﾎﾞﾙﾄ	2	
45	22N54-32221		ADAPTER	ｱﾀﾞﾌﾟﾀ	1	
46	22N54-32231		PACKING	ﾊﾟｯｷﾝｸﾞ	1	
47	01030-06010		BOLT	ﾎﾞﾙﾄ	4	
48	22N54-32241		COVER,POTENTIOMETER	ｶﾊﾞｰ	1	
49	22N54-32181		COLLAR	ｶﾗｰ	4	
50	22N54-32401		RUBBER	ﾗﾊﾞｰ	1	1-109
-	22N54-32402		RUBBER	ﾗﾊﾞｰ	1	110-
51	26602-42041		CLIP	ｸﾘｯﾌﾟ	1	
52	01185-08016		BOLT	ﾎﾞﾙﾄ	1	

M E M O

M E M O

FIG.75 AXLE SUPPORT

(F7Z34330) アクスルサポート

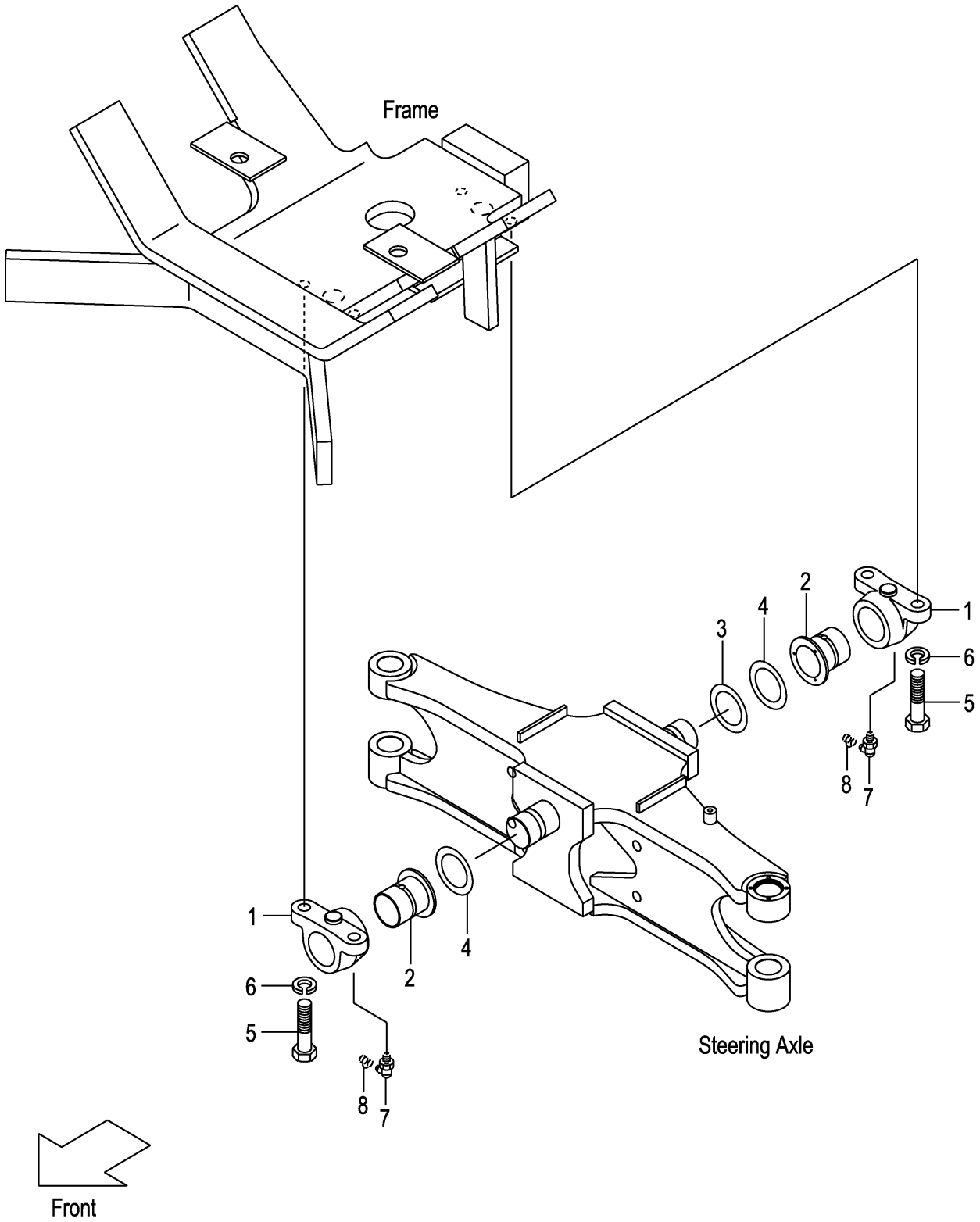

FIG.75

(F7Z34330)

A:FD30C3Z FD30T3Z

Item No	Part No.	Mark	Description		Req'd	Remarks : Serial No.
1	22N54-32311		SUPPORT,REAR-AXLE	ｻﾎﾟｰﾄ	2	
2	22N54-32321		BUSHING,AXLE-SUPPORT	ﾌﾞｯｼﾝｸﾞ	2	
3	214A4-32201		SHIM,T-0.5	ｼﾑ	1	
4	214A4-32211		SHIM,T-1.0	ｼﾑ	2	
5	01100-16045		BOLT	ﾎﾞﾙﾄ	4	
6	02010-00016		WASHER	ﾜｯｼｬ	4	
7	04901-00190		FITTING	ﾌｨｯﾃｨﾝｸﾞ	2	
8	22199-12401		CAP,NIPPLE	ｷｬｯﾌﾟ	2	

FIG.76 HUB NUT

(F7Z34410) ﾊﾌﾞﾅｯﾄ

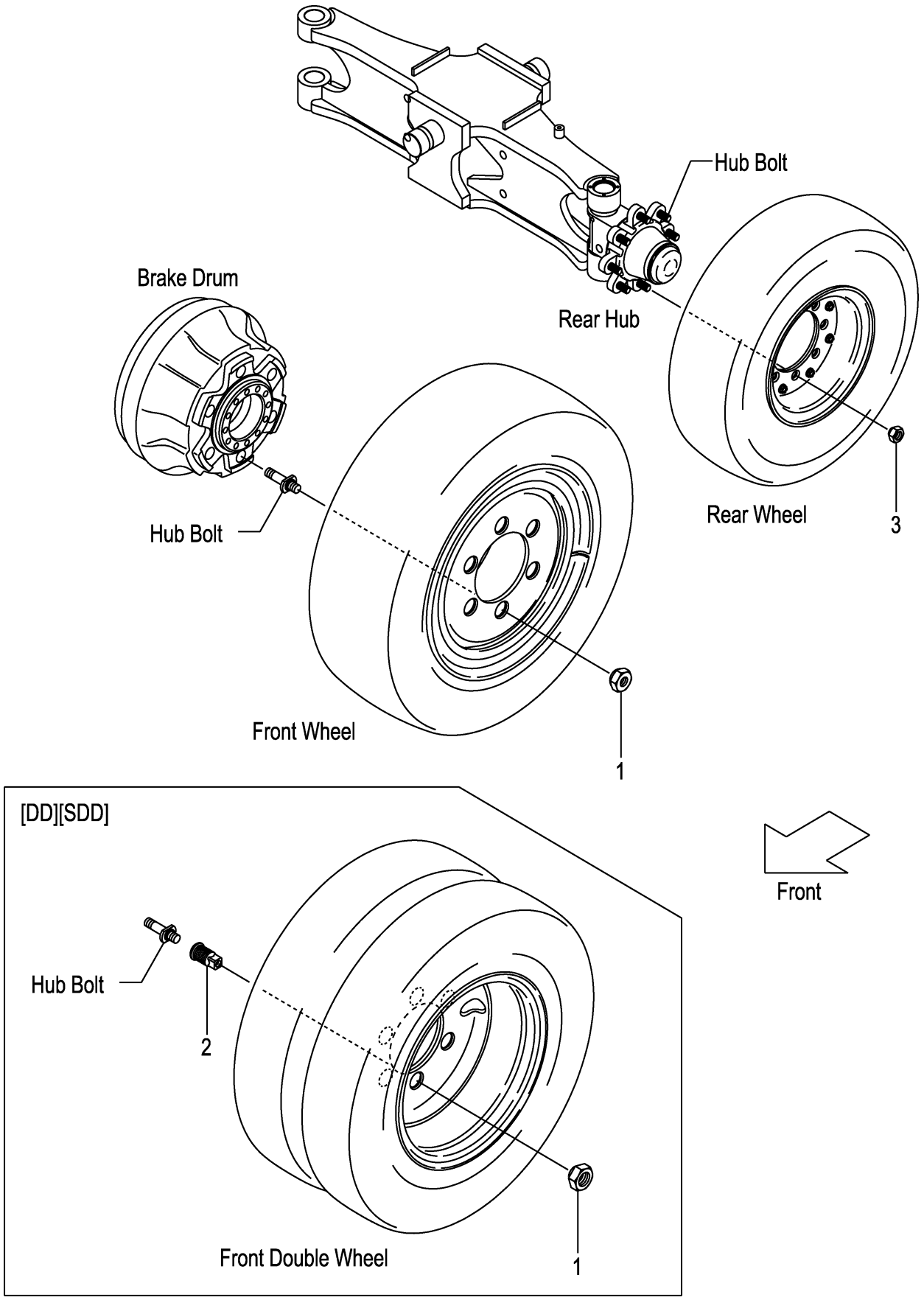

FIG.76

(F7Z34410)

A:FD30C3Z FD30T3Z

Item No	Part No.	Mark	Description	Req'd	Remarks : Serial No.
1	23913-02041		NUT,HUB ﾅｯﾄ	12	(FRONT)
-	514J3-72051		NUT,HUB ﾅｯﾄ	12	[FC](FRONT)
-	23813-00081		NUT,HUB ﾅｯﾄ	12	[DD][SDD](FRONT)
-	514A3-72101		NUT,HUB ﾅｯﾄ	12	[FC/DD][FC/SDD](FRONT)
2	23813-00071		NUT,INNER ﾅｯﾄ	12	[DD][SDD][FC/DD][FC/SDD] (FRONT)
3	23654-34051		NUT,HUB ﾅｯﾄ	16	(REAR)
-	57045-52151		NUT,HUB ﾅｯﾄ	16	[FC](REAR)

FIG.77 FENDER

(F7Z34420) ﾌｪﾝﾀﾞ

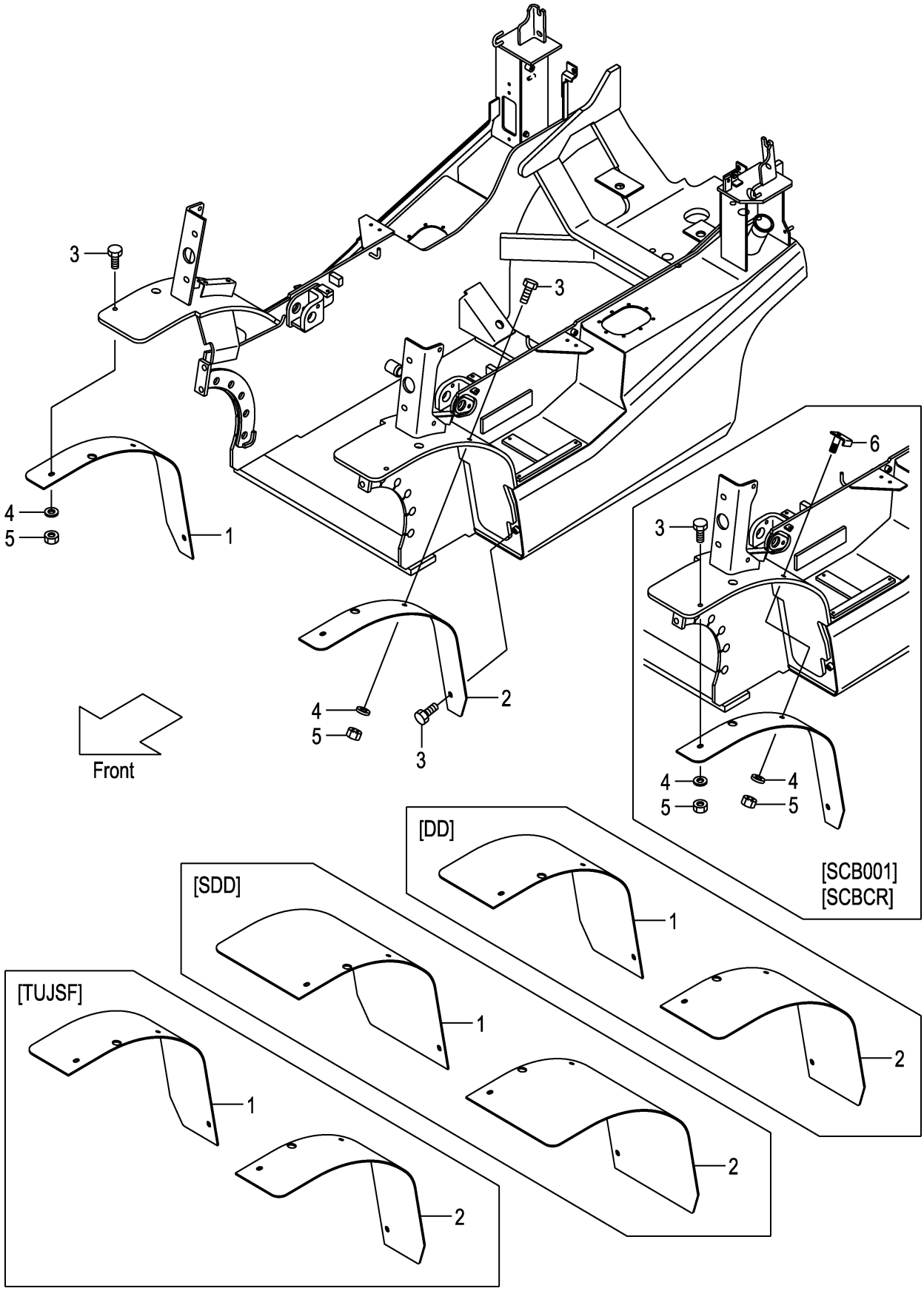

A:FD30C3Z FD30T3Z

Item No	Part No.	Mark	Description		Req'd	Remarks : Serial No.
1	22N96-12201		FENDER,FRONT,RH	ﾌｪﾝﾀﾞ	1	
-	52N97-42001		FENDER,FRONT,RH	ﾌｪﾝﾀﾞ	1	[DD]
-	52N97-42021		FENDER,FRONT,RH	ﾌｪﾝﾀﾞ	1	[SDD]
-	52N97-42041		FENDER,FRONT,RH	ﾌｪﾝﾀﾞ	1	[TUJSF]
2	22N96-12211		FENDER,FRONT,LH	ﾌｪﾝﾀﾞ	1	
-	52N97-42011		FENDER,FRONT,LH	ﾌｪﾝﾀﾞ	1	[DD]
-	52N97-42031		FENDER,FRONT,LH	ﾌｪﾝﾀﾞ	1	[SDD]
-	52N97-42051		FENDER,FRONT,LH	ﾌｪﾝﾀﾞ	1	[TUJSF]
3	01186-10030		BOLT	ﾎﾞﾙﾄ	6	
-	01186-10030		BOLT	ﾎﾞﾙﾄ	4	[SCB001][SCBCR]
4	02000-00010		WASHER	ﾜｯｼｬ	4	
5	01400-00010		NUT	ﾅｯﾄ	4	
6	52N55-32211		BOLT,FENDER	ﾎﾞﾙﾄ	2	[SCB001][SCBCR]

FIG.78 FRONT WHEEL

(F7Z34430) フロントホイール

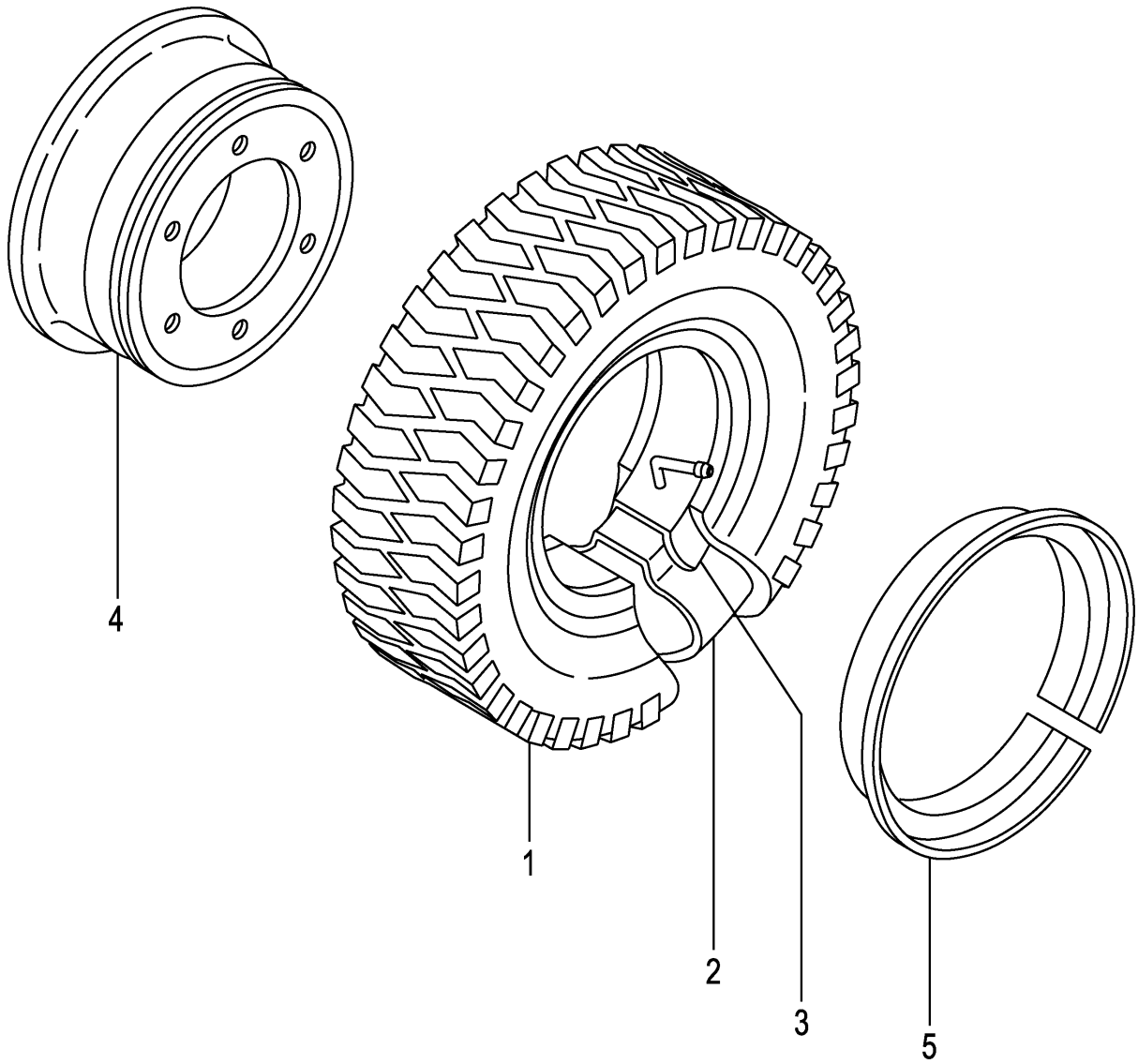

A:FD30C3Z FD30T3Z

Item No	Part No.	Mark	Description		Req'd	Remarks : Serial No.
A1	24454-40201		WHEEL-ASSY,FRONT	ﾌﾛﾝﾄﾎｲｰﾙｱｯｾﾝ	2	INC.1-5
A2	24454-40211		TIRE-ASSY	ﾀｲﾔｱｯｾﾝ	2	INC.1-3
1	52436-82101		TIRE,28-9-15-12	ﾀｲﾏｰ	2	
2	52436-82111		TUBE,28-9-15-12T	ﾁｭｰﾌﾞ	2	
3	52436-82121		FLAP,28-9-15-12F	ﾌﾗｯﾌﾟ	2	
A3	24454-40221		RIM-ASSY,700T-15	ﾘﾑｱｯｾﾝ	2	INC.4,5
4	NO PART NO.	#	RIM & DISK	ﾘﾑ & ﾃﾞｨｽｸ	2	
5	22439-44031		RING,SIDE	ﾘﾝｸﾞ	2	

FIG.79 FRONT WHEEL [TJ F][TJSF][TS F]

(F7Z34450) フロントホイール

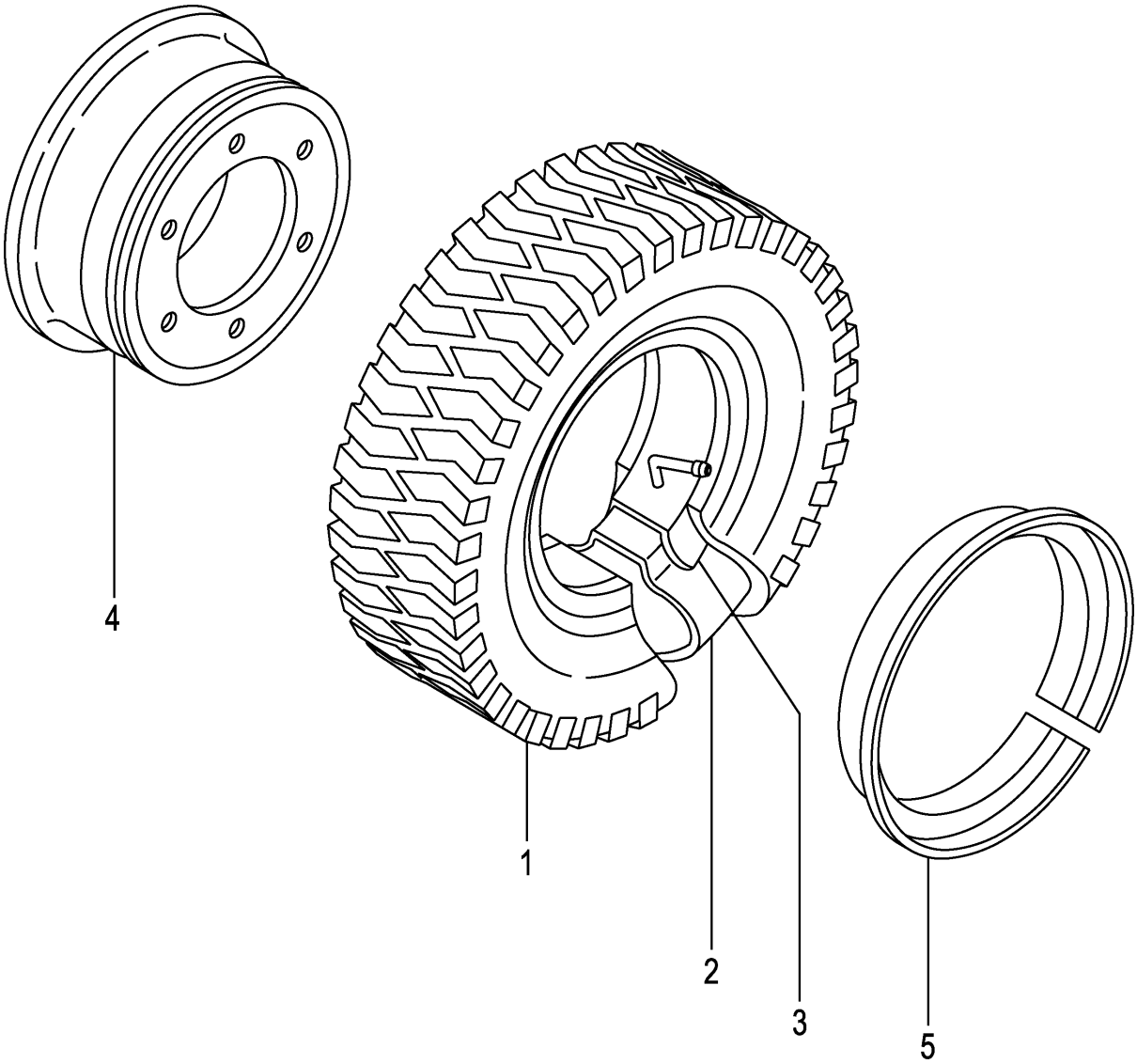

A:FD30C3Z FD30T3Z

Item No	Part No.	Mark	Description		Req'd	Remarks : Serial No.
A1	24454-40201		WHEEL-ASSY,FRONT	ﾌﾛﾝﾄﾎｲｰﾙｱｯｾﾝ	2	[TJ F] INC.1-5
-	539F7-40401		WHEEL-ASSY,FRONT	ﾌﾛﾝﾄﾎｲｰﾙｱｯｾﾝ	2	[TJSF] INC.1-5
-	539F7-40601		WHEEL-ASSY,FRONT	ﾌﾛﾝﾄﾎｲｰﾙｱｯｾﾝ	2	[TS F] INC.1-5
A2	24454-40211		TIRE-ASSY	ﾀｲﾔｱｯｾﾝ	2	[TJ F] INC.1-3
1	52436-82101		TIRE,28-9-15-12	ﾀｲﾏｰ	2	[TJ F]
-	06005-81515		TIRE,28-9-15-12	ﾀｲﾏｰ	2	[TJSF]
-	06007-81515		TIRE,28-9-15-12	ﾀｲﾏｰ	2	[TS F]
2	52436-82111		TUBE,28-9-15-12T	ﾁｭｰﾌﾞ	2	[TJ F][TJSF][TS F]
3	52436-82121		FLAP,28-9-15-12F	ﾌﾗｯﾌﾟ	2	[TJ F][TJSF][TS F]
A3	24454-40221		RIM-ASSY,700T-15	ﾘﾑｱｯｾﾝ	2	[TJ F][TJSF][TS F] INC.4,5
4	NO PART NO.	#	RIM & DISK	ﾘﾑ & ﾃﾞｨｽｸ	2	[TJ F][TJSF][TS F]
5	22439-44031		RING,SIDE	ﾘﾝｸﾞ	2	[TJ F][TJSF][TS F]

FIG.80 FRONT WHEEL [TSUF][TUJF][TUSF][TUWF][TUGF]

(F7Z34470) フロントホイール

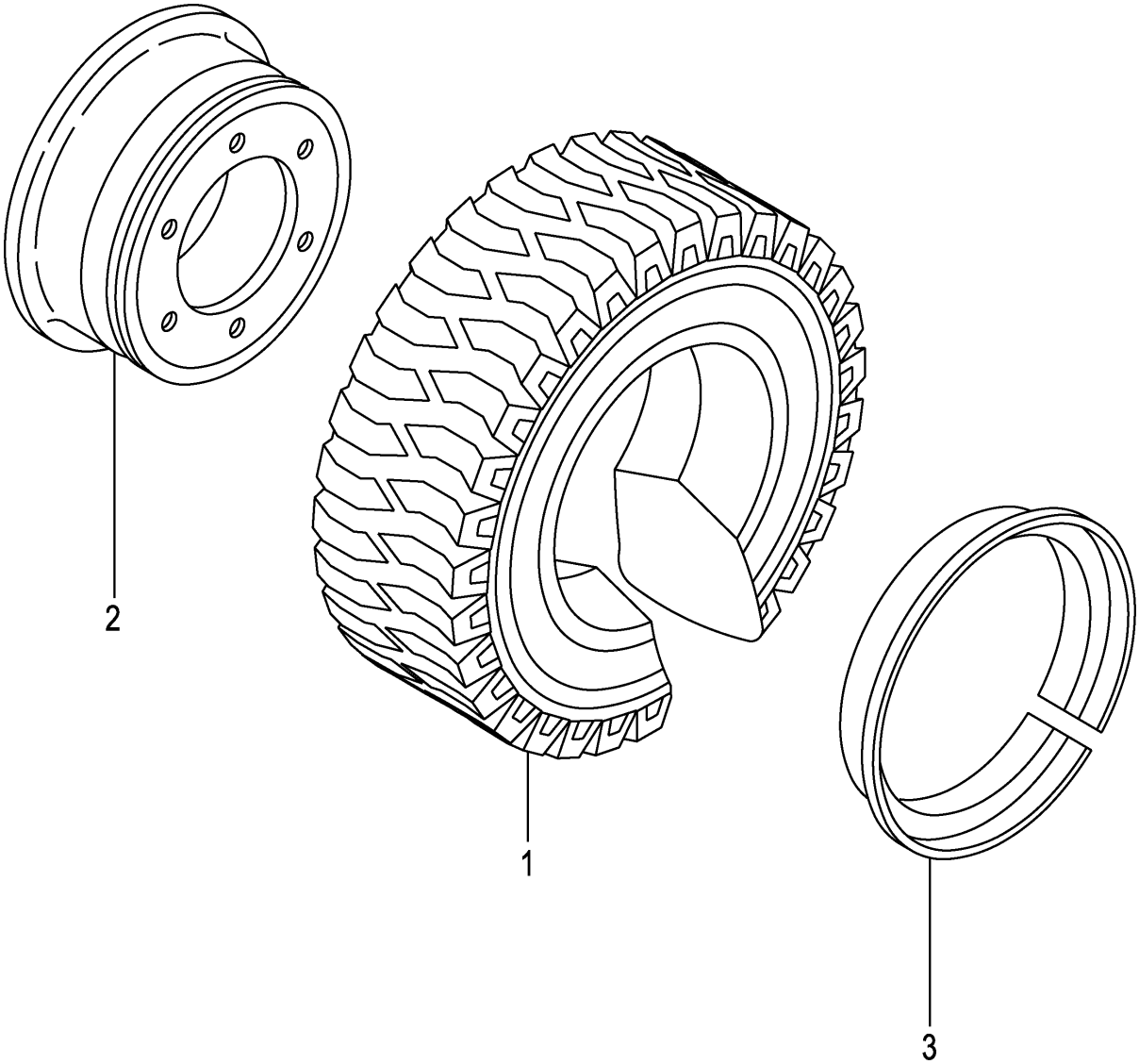

A:FD30C3Z FD30T3Z

Item No	Part No.	Mark	Description		Req'd	Remarks : Serial No.
A1	539F6-80201		WHEEL-ASSY,FRONT	ﾌﾛﾝﾄﾎｲｰﾙｱｯｾﾝ	2	[TSUF] INC.1-3
-	534F7-40502		WHEEL-ASSY,FRONT	ﾌﾛﾝﾄﾎｲｰﾙｱｯｾﾝ	2	[TUJF] INC.1-3
-	534F7-40502		WHEEL-ASSY,FRONT	ﾌﾛﾝﾄﾎｲｰﾙｱｯｾﾝ	2	[TUJF/EX] INC.1-3
-	534F6-80422		WHEEL-ASSY,FRONT	ﾌﾛﾝﾄﾎｲｰﾙｱｯｾﾝ	2	[TUSF] INC.1-3
-	534F6-80402		WHEEL-ASSY,FRONT	ﾌﾛﾝﾄﾎｲｰﾙｱｯｾﾝ	2	[TUWF] INC.1-3
-	534F6-80412		WHEEL-ASSY,FRONT	ﾌﾛﾝﾄﾎｲｰﾙｱｯｾﾝ	2	[TUGF] INC.1-3
1	06807-28915		TIRE,UNIQUE,28-9-15	ﾀｲﾔ	2	[TSUF]
-	06806-81515		TIRE,UNIQUE,28-9-15	ﾀｲﾔ	2	[TUJF]
-	06807-81515		TIRE,UNIQUE,28-9-15	ﾀｲﾔ	2	[TUJF]
-	06807-81515		TIRE,UNIQUE,28-9-15	ﾀｲﾔ	2	[TUJF/EX]
-	522Q6-82021		TIRE,SOFTONE,28-9-15	ﾀｲﾔ	2	[TUSF]
-	522Q6-82001		TIRE,WHITE,28-9-15	ﾀｲﾔ	2	[TUWF]
-	522Q6-82011		TIRE,GREEN,28-9-15	ﾀｲﾔ	2	[TUGF]
A2	54456-82201		RIM-ASSY,700T-15	ﾘﾑｱｯｾﾝ	2	[TSUF][TUJF][TUSF][TUWF] [TUGF] INC.2,3
2	NO PART NO.	#	RIM & DISK	ﾘﾑ & ﾃﾞｨｽｸ	2	[TSUF][TUJF][TUSF][TUWF] [TUGF]
3	54456-82224		RING,SIDE	ﾘﾝｸﾞ	2	[TSUF][TUJF][TUSF][TUWF] [TUGF]

FIG.81 FRONT WHEEL [TRAF]

(F7Z34490) フロントホイール

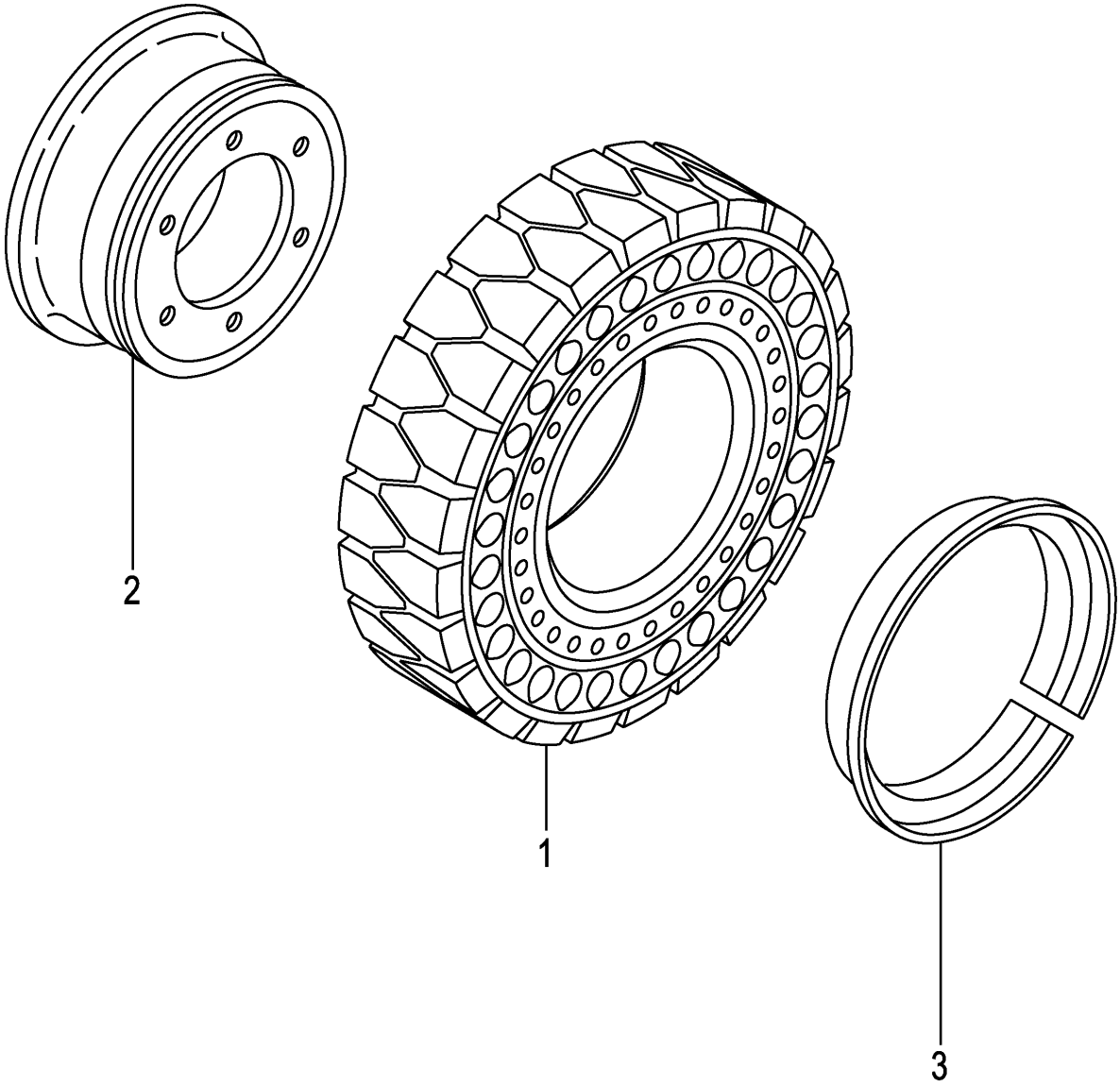

FIG.81

(F7Z34490)

A:FD30C3Z FD30T3Z

Item No	Part No.	Mark	Description		Req'd	Remarks : Serial No.
A1	534F6-80171		WHEEL-ASSY,FRONT	ﾌﾛﾝﾄﾎｲｰﾙｱｯｾﾝ	2	[TRAF] INC.1-3
1	534F6-85001		TIRE,AIR-BOSS,650-10	ﾀｲﾔ	2	[TRAF]
A2	54456-82201		RIM-ASSY,700T-15	ﾘﾑｱｯｾﾝ	2	[TRAF] INC.2,3
2	NO PART NO.	#	RIM & DISK	ﾘﾑ & ﾃﾞｨｽｸ	2	[TRAF]
3	54456-82224		RING,SIDE	ﾘﾝｸﾞ	2	[TRAF]

FIG.82 FRONT WHEEL [TUJSF]

(F7Z344A0) フロントホイール

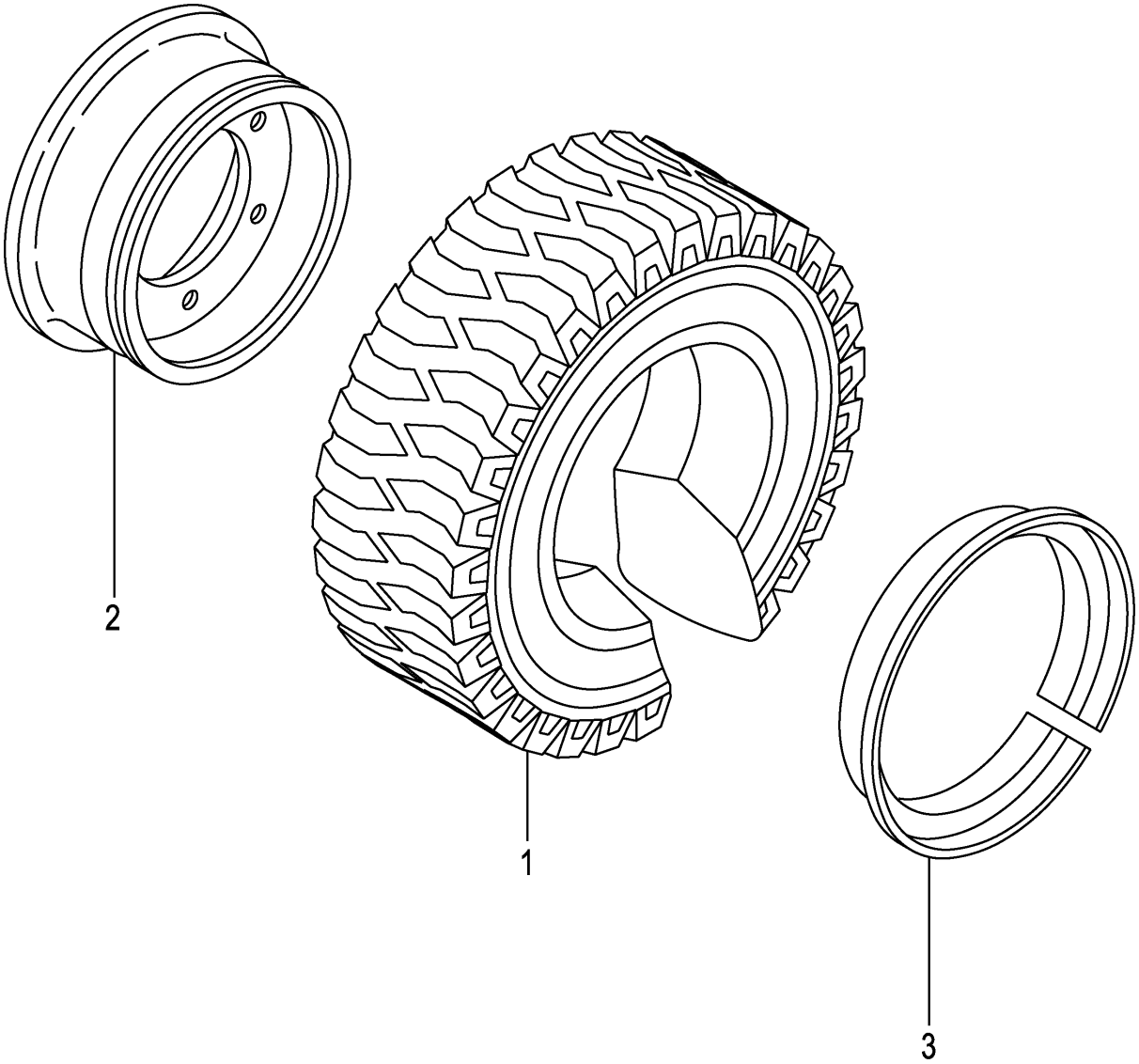

A:FD30C3Z FD30T3Z

Item No	Part No.	Mark	Description		Req'd	Remarks : Serial No.
A1	534F6-83002		WHEEL-ASSY,FRONT	ﾌﾛﾝﾄﾎｲｰﾙｱｯｾﾝ	2	[TUJSF] INC.1-3
1	52436-82151		TIRE,UNIQUE,28-9-15	ﾀｲﾔ	2	[TUJSF]
A2	63056-56501		RIM-ASSY,700T-15	ﾘﾑｱｯｾﾝ	2	[TUJSF] INC.2,3
2	NO PART NO.	#	RIM & DISK	ﾘﾑ & ﾃﾞｨｽｸ	2	[TUJSF]
3	514T6-82021		RING,SIDE	ﾘﾝｸﾞ	2	[TUJSF]

FIG.83 FRONT WHEEL [TJ W][TJSW][TS W]

(F7Z344B0) フロントホイール

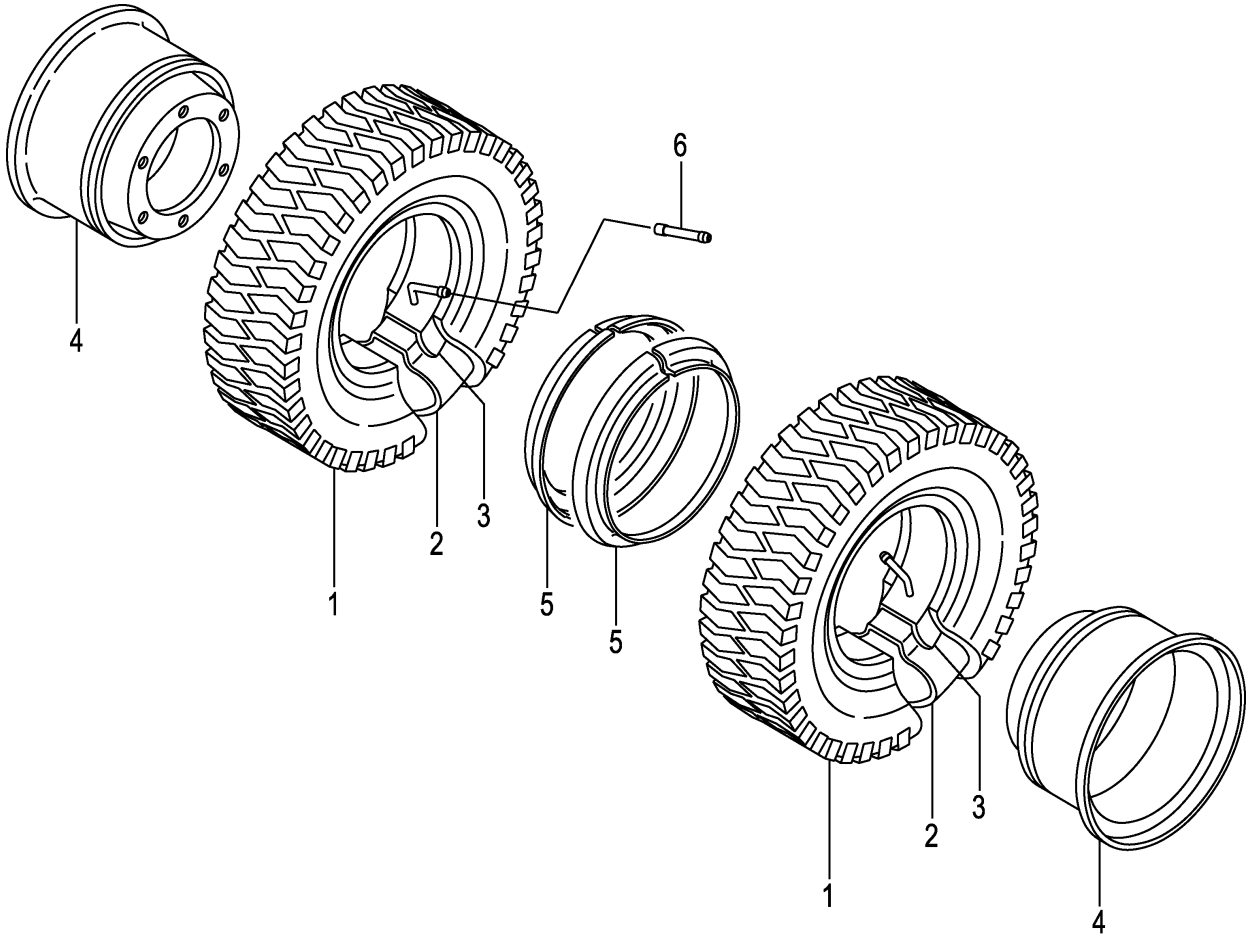

A:FD30C3Z FD30T3Z

Item No	Part No.	Mark	Description		Req'd	Remarks : Serial No.
A1	54456-80421		WHEEL-ASSY,FRONT	ﾌﾛﾝﾄﾎｲｰﾙｱｯｾﾝ	4	[TJ W] INC.1-5
-	539F7-40501		WHEEL-ASSY,FRONT	ﾌﾛﾝﾄﾎｲｰﾙｱｯｾﾝ	4	[TJSW] INC.1-5
-	539F7-40701		WHEEL-ASSY,FRONT	ﾌﾛﾝﾄﾎｲｰﾙｱｯｾﾝ	4	[TS W] INC.1-5
1	06006-60015		TIRE,600-15-10	ﾀｲﾏｰ	4	[TJ W]
-	06005-60015		TIRE,600-15-10	ﾀｲﾏｰ	4	[TJSW]
-	06007-60015		TIRE,600-15-10	ﾀｲﾏｰ	4	[TS W]
2	06711-60015		TUBE,600-15-10T	ﾁｭｰﾌﾞ	4	[TJ W][TJSW][TS W]
3	06710-60015		FLAP,600-15-10F	ﾌﾗｯﾌﾟ	4	[TJ W][TJSW][TS W]
A2	53657-42053		RIM-ASSY,450E-15	ﾘﾑｱｯｾﾝ	4	[TJ W][TJSW][TS W] INC.4,5
4	NO PART NO.	#	RIM & DISK	ﾘﾑ & ﾃﾞｨｽｸ	4	[TJ W][TJSW][TS W]
5	53457-42151		RING,SIDE	ﾘﾝｸﾞ	4	[TJ W][TJSW][TS W]
6	06731-00120		TUBE,EXTENSION	ﾁｭｰﾌﾞ	2	[TJ W][TJSW][TS W]

FIG.84 FRONT WHEEL [TUJW][TUSW][TUWW][TUGW]

(F7Z344C0) フロントホイール

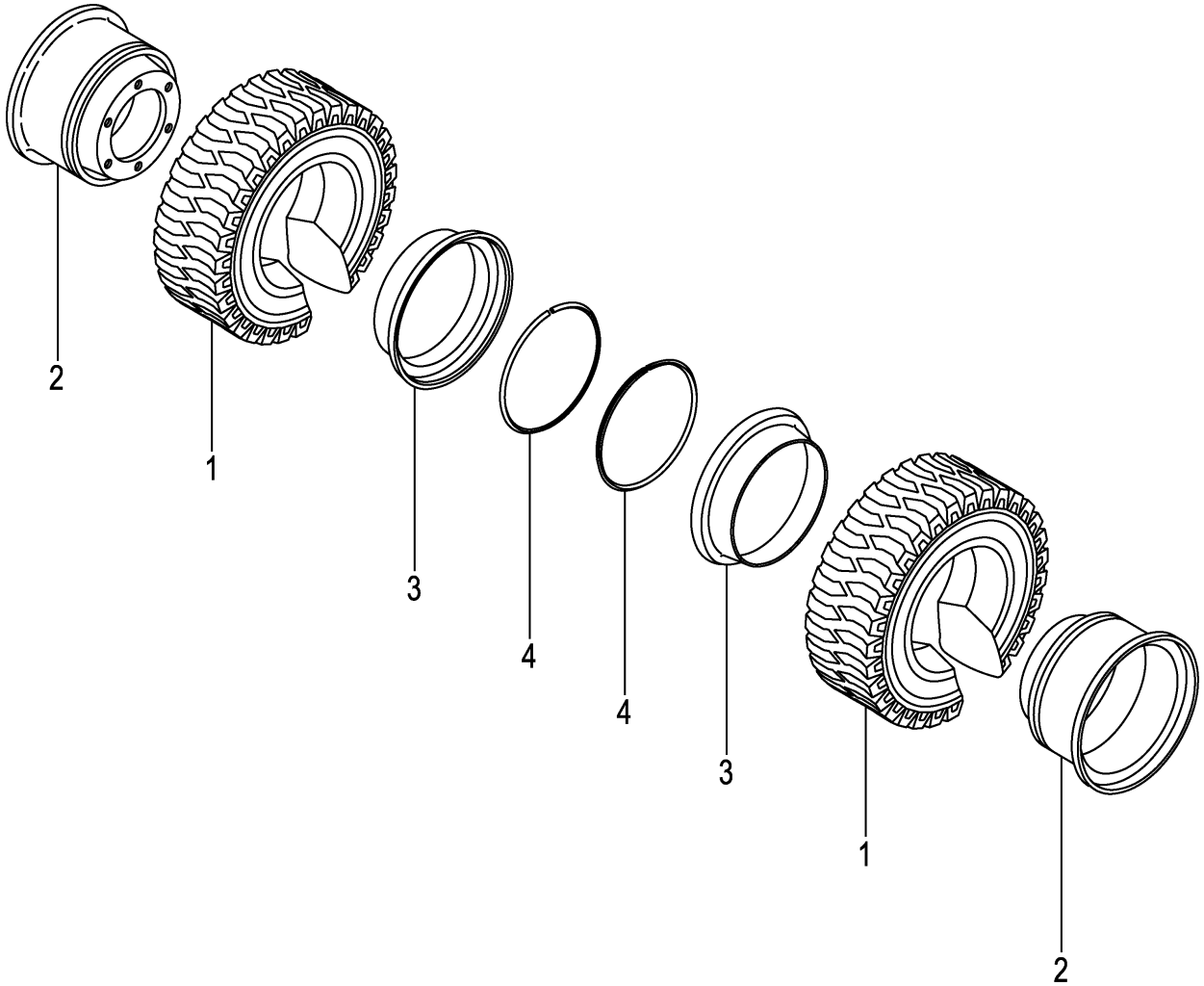

A:FD30C3Z FD30T3Z

Item No	Part No.	Mark	Description		Req'd	Remarks : Serial No.
A1	54457-40201		WHEEL-ASSY,FRONT	ﾌﾛﾝﾄﾎｲｰﾙｱｯｾﾝ	4	[TUJW] INC.1-4
-	522Q6-80321		WHEEL-ASSY,FRONT	ﾌﾛﾝﾄﾎｲｰﾙｱｯｾﾝ	4	[TUSW] INC.1-4
-	522Q6-80301		WHEEL-ASSY,FRONT	ﾌﾛﾝﾄﾎｲｰﾙｱｯｾﾝ	4	[TUWW] INC.1-4
-	522Q6-80311		WHEEL-ASSY,FRONT	ﾌﾛﾝﾄﾎｲｰﾙｱｯｾﾝ	4	[TUGW] INC.1-4
1	06806-60015		TIRE,UNIQUE,600-15	ﾀｲﾔ	4	[TUJW]
-	06851-60015		TIRE,SOFTONE,600-15	ﾀｲﾔ	4	[TUSW]
-	06841-60015		TIRE,WHITE,600-15	ﾀｲﾔ	4	[TUWW]
-	06843-60015		TIRE,GREEN,600-15	ﾀｲﾔ	4	[TUGW]
A2	53656-82001		RIM-ASSY,450E-15	ﾘﾑｱｯｾﾝ	4	[TUJW][TUSW][TUWW][TUGW] INC.2-4
2	NO PART NO.	#	RIM	ﾘﾑ	4	[TUJW][TUSW][TUWW][TUGW]
3	53456-82052		RING,SIDE	ﾘﾝｸﾞ	4	[TUJW][TUSW][TUWW][TUGW]
4	53456-82062		RING,LOCK	ﾘﾝｸﾞ	4	[TUJW][TUSW][TUWW][TUGW]

FIG.85 FRONT WHEEL [TJ W28][TJSW28][TS W28]

(F7Z344D0) フロントホイール

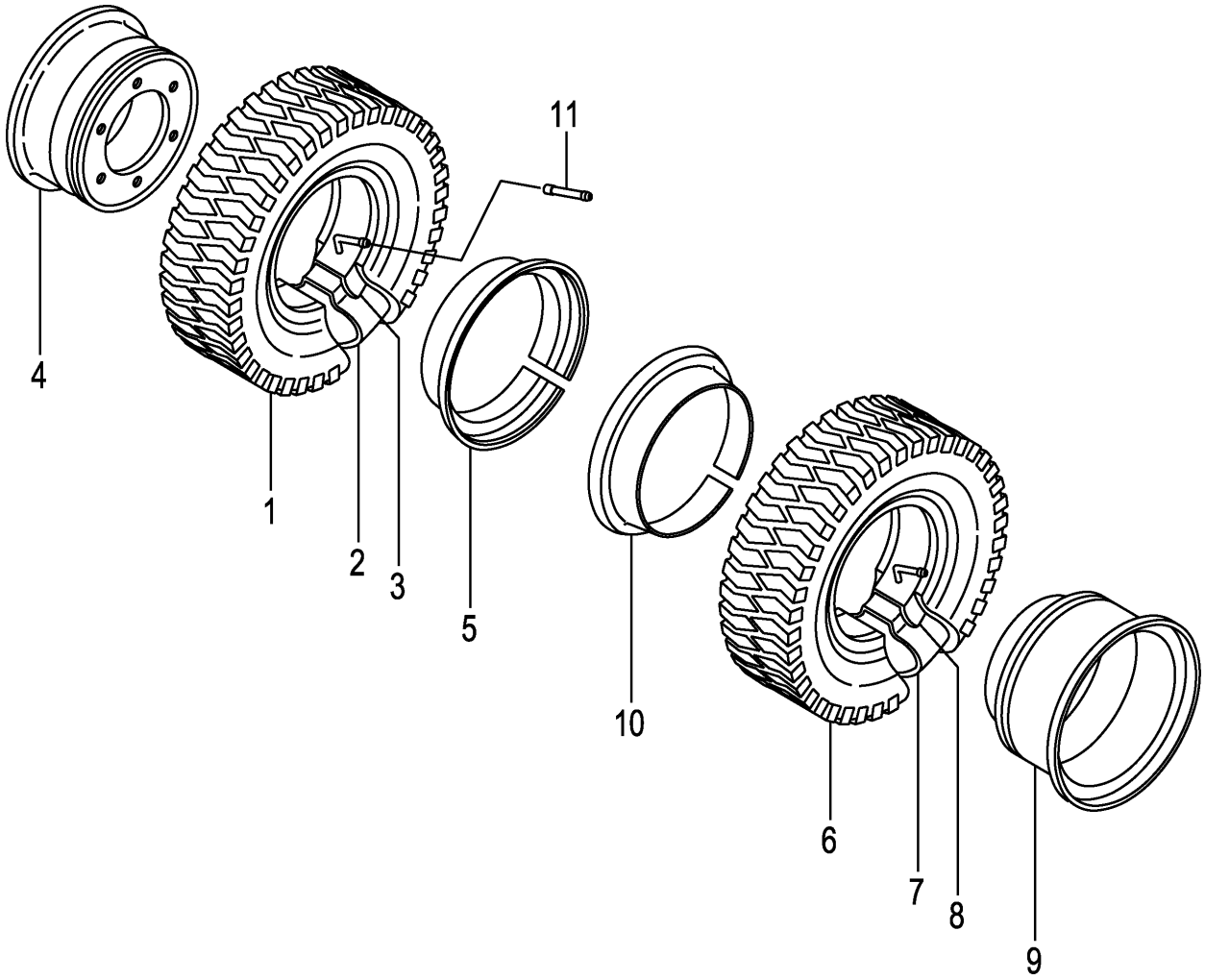

A:FD30C3Z FD30T3Z

Item No	Part No.	Mark	Description		Req'd	Remarks : Serial No.
A1	24454-40201		WHEEL-ASSY,FRONT	ﾌﾛﾝﾄﾎｲｰﾙｱｯｾﾝ	2	[TJ W28] INC.1-5
-	539F7-40401		WHEEL-ASSY,FRONT	ﾌﾛﾝﾄﾎｲｰﾙｱｯｾﾝ	2	[TJSW28] INC.1-5
-	539F7-40601		WHEEL-ASSY,FRONT	ﾌﾛﾝﾄﾎｲｰﾙｱｯｾﾝ	2	[TS W28] INC.1-5
A2	24454-40211		TIRE-ASSY	ﾀｲﾔｱｯｾﾝ	2	[TJ W28] INC.1-3
1	52436-82101		TIRE,28-9-15-12	ﾀｲﾏｰ	2	[TJ W28]
-	06005-81515		TIRE,28-9-15-12	ﾀｲﾏｰ	2	[TJSW28]
-	06007-81515		TIRE,28-9-15-12	ﾀｲﾏｰ	2	[TS W28]
2	52436-82111		TUBE,28-9-15-12T	ﾁｭｰﾌﾞ	2	[TJ W28][TJSW28][TS W28]
3	52436-82121		FLAP,28-9-15-12F	ﾌﾗｯﾌﾟ	2	[TJ W28][TJSW28][TS W28]
A3	24454-40221		RIM-ASSY,700T-15	ﾘﾑｱｯｾﾝ	2	[TJ W28][TJSW28][TS W28] INC.4,5
4	NO PART NO.	#	RIM	ﾘﾑ	2	[TJ W28][TJSW28][TS W28]
5	22439-44031		RING,SIDE	ﾘﾝｸﾞ	2	[TJ W28][TJSW28][TS W28]
A4	54456-80201		WHEEL-ASSY,FRONT	ﾌﾛﾝﾄﾎｲｰﾙｱｯｾﾝ	2	[TJ W28] INC.6-10
-	539F7-40411		WHEEL-ASSY,FRONT	ﾌﾛﾝﾄﾎｲｰﾙｱｯｾﾝ	2	[TJSW28] INC.6-10
-	539F7-40611		WHEEL-ASSY,FRONT	ﾌﾛﾝﾄﾎｲｰﾙｱｯｾﾝ	2	[TS W28] INC.6-10
A5	24454-40211		TIRE-ASSY	ﾀｲﾔｱｯｾﾝ	2	[TJ W28] INC.6-8
6	52436-82101		TIRE,28-9-15-12	ﾀｲﾏｰ	2	[TJ W28]
-	06005-81515		TIRE,28-9-15-12	ﾀｲﾏｰ	2	[TJSW28]
-	06007-81515		TIRE,28-9-15-12	ﾀｲﾏｰ	2	[TS W28]
7	52436-82111		TUBE,28-9-15-12T	ﾁｭｰﾌﾞ	2	[TJ W28][TJSW28][TS W28]
8	52436-82121		FLAP,28-9-15-12F	ﾌﾗｯﾌﾟ	2	[TJ W28][TJSW28][TS W28]
A6	54456-80211		RIM-ASSY,700T-15	ﾘﾑｱｯｾﾝ	2	[TJ W28][TJSW28][TS W28] INC.9,10
9	NO PART NO.	#	RIM	ﾘﾑ	2	[TJ W28][TJSW28][TS W28]
10	22439-44031		RING,SIDE	ﾘﾝｸﾞ	2	[TJ W28][TJSW28][TS W28]
11	06731-00120		TUBE,EXTENSION	ﾁｭｰﾌﾞ	2	[TJ W28][TJSW28][TS W28]

FIG.86 REAR WHEEL

(F7Z344F0) リヤーホイール

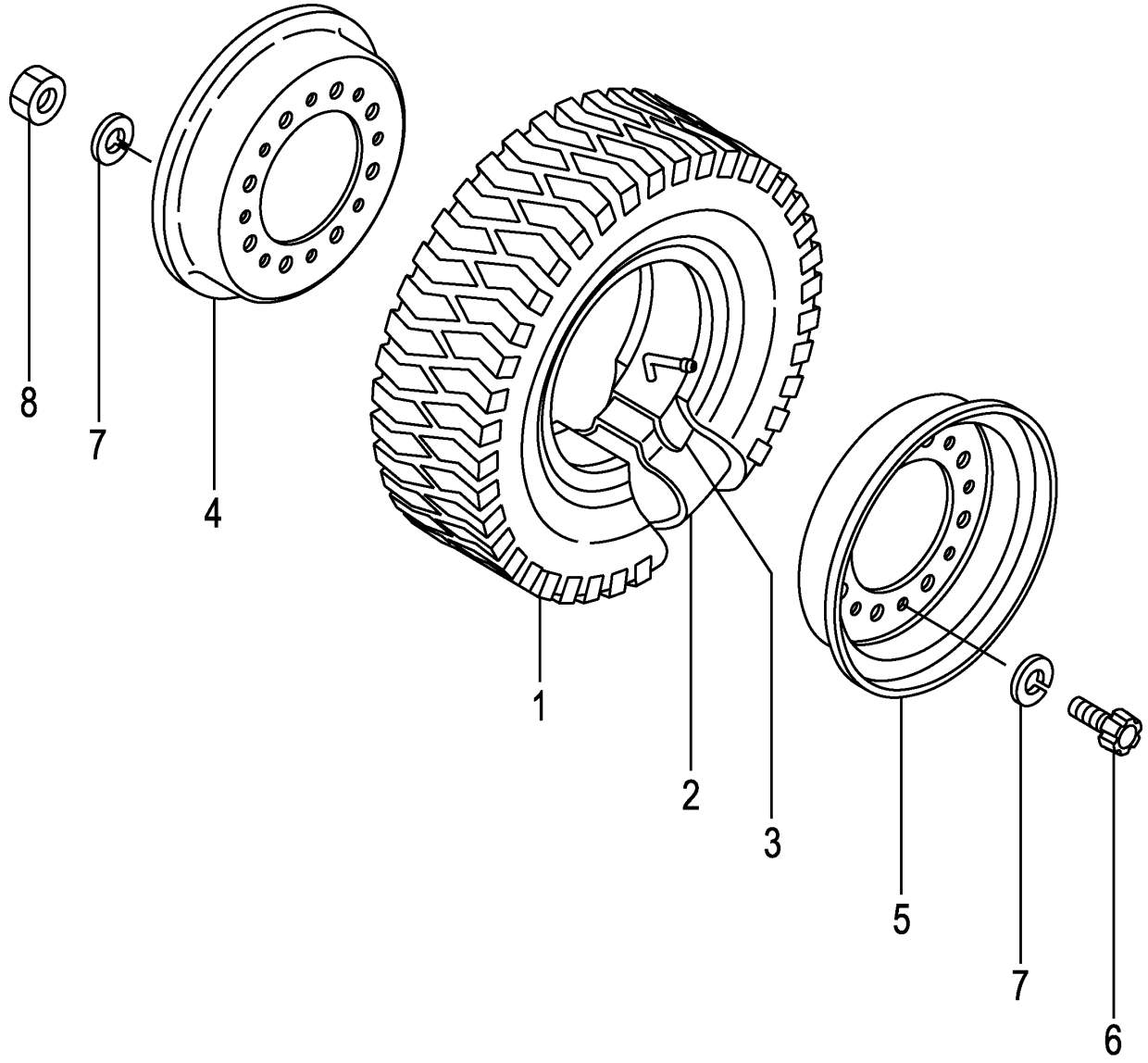

A:FD30C3Z FD30T3Z

Item No	Part No.	Mark	Description		Req'd	Remarks : Serial No.
A1	234F4-40302		WHEEL-ASSY,REAR	ﾘﾔｰﾎｲｰﾙｱｯｾﾝ	2	INC.1-8
1	06006-65010		TIRE,650-10-10	ﾀｲﾔ	2	
2	06711-65010		TUBE,650-10-10T	ﾁｭｰﾌﾞ	2	
3	06701-65010		FLAP,650-10-10F	ﾌﾗｯﾌﾟ	2	
A2	52356-80302		RIM-ASSY,500F-10	ﾘﾑｱｯｾﾝ	2	INC.4-8
4	NO PART NO.	#	RIM,INSIDE	ﾘﾑ	2	
5	NO PART NO.	#	RIM,OUTSIDE	ﾘﾑ	2	
6	534F3-82001		BOLT	ﾎﾞﾙﾄ	16	
7	02011-00012		WASHER	ﾜｯｼｬ	32	
8	01400-00012		NUT	ﾅｯﾄ	16	

FIG.87 REAR WHEEL [DR R]

(F7Z344G0) リヤーホイール

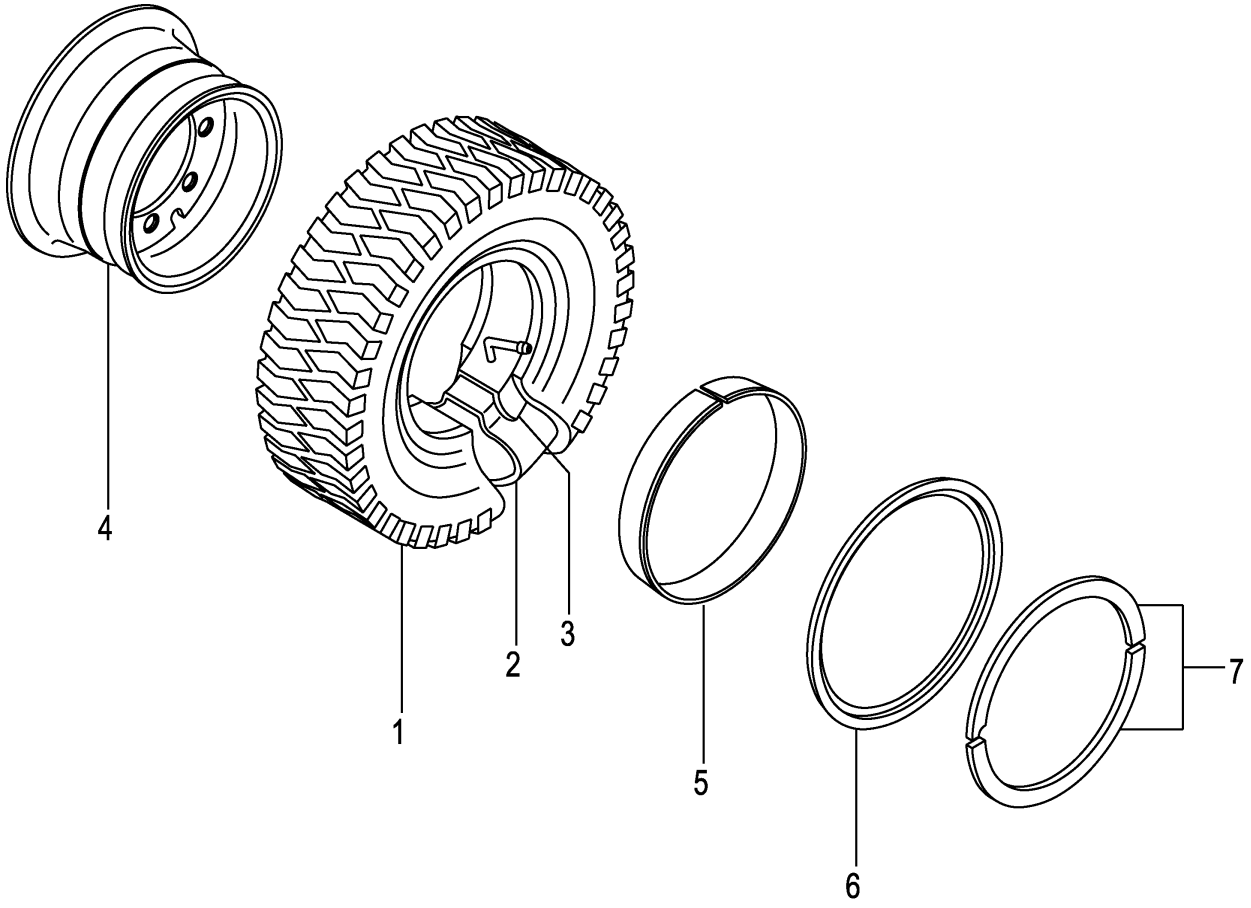

A:FD30C3Z FD30T3Z

Item No	Part No.	Mark	Description		Req'd	Remarks : Serial No.
A1	514J6-82201		WHEEL-ASSY,REAR	ﾘﾔｰﾎｲｰﾙｱｯｾﾝ	2	[DR R] INC.1-7
1	06006-65010		TIRE,650-10-10	ﾀｲﾔ	2	[DR R]
2	06711-65010		TUBE,650-10-10T	ﾁｭｰﾌﾞ	2	[DR R]
3	06701-65010		FLAP,650-10-10F	ﾌﾗｯﾌﾟ	2	[DR R]
A2	514J6-82211		RIM-ASSY,500F-10	ﾘﾑｱｯｾﾝ	2	[DR R] INC.4-7
4	NO PART NO.	#	RIM	ﾘﾑ	2	[DR R]
5	54236-83011		BAND	ﾊﾞﾝﾄﾞ	2	[DR R]
6	54236-83021		FLANGE,SIDE	ﾌﾗﾝｼﾞ	2	[DR R]
7	54236-83031		RING,LOCK	ﾘﾝｸﾞ	2	[DR R]

FIG.88 REAR WHEEL [TJ R][TJSR][TS R]

(F7Z344H0) リヤーホイール

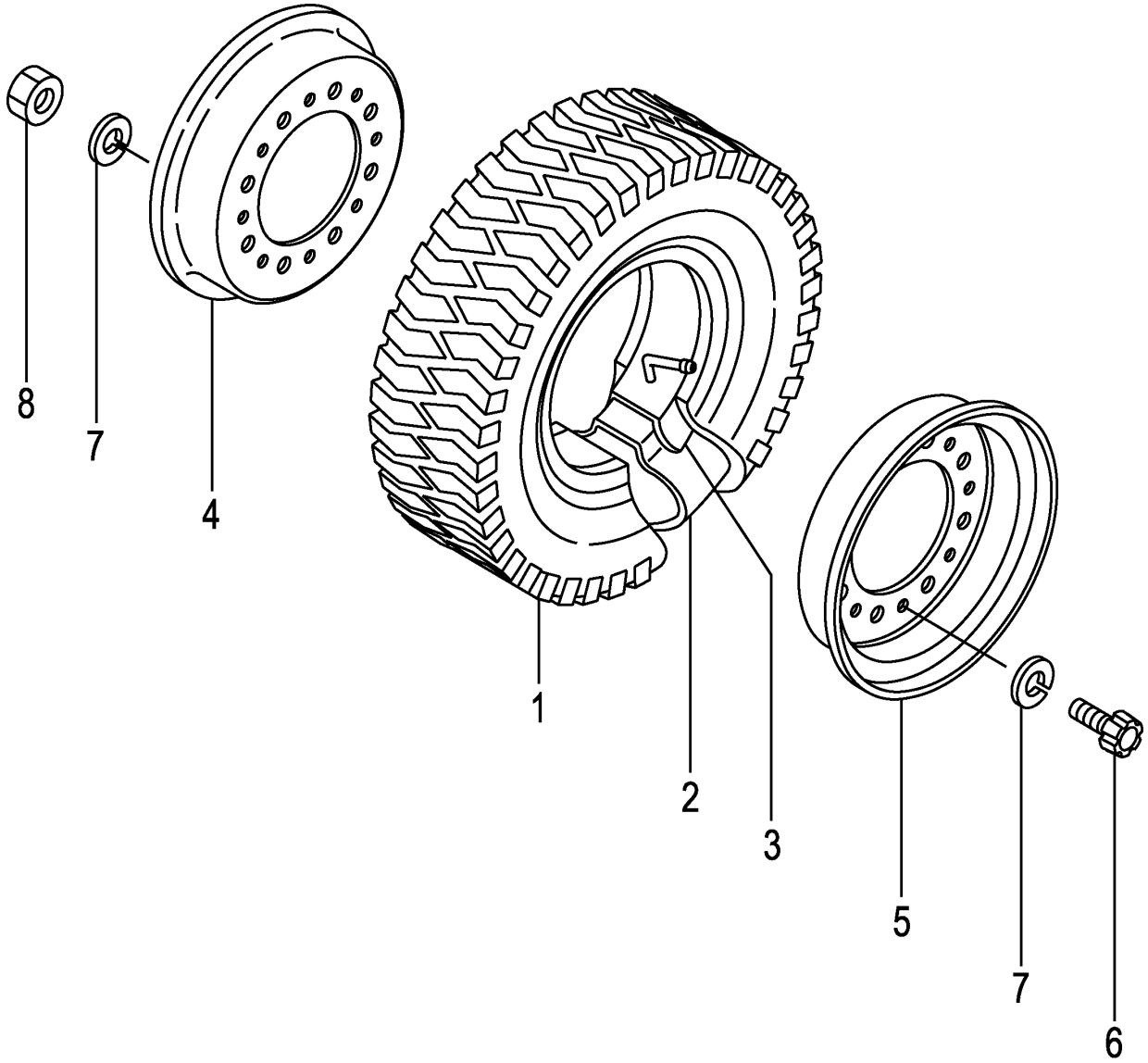

A:FD30C3Z FD30T3Z

Item No	Part No.	Mark	Description		Req'd	Remarks : Serial No.
A1	234F4-40302		WHEEL-ASSY,REAR	ﾘﾔｰﾎｲｰﾙｱｯｾﾝ	2	[TJ R] INC.1-8
-	539F7-40511		WHEEL-ASSY,REAR	ﾘﾔｰﾎｲｰﾙｱｯｾﾝ	2	[TJSR] INC.1-8
-	539F7-40711		WHEEL-ASSY,REAR	ﾘﾔｰﾎｲｰﾙｱｯｾﾝ	2	[TS R] INC.1-8
1	06006-65010		TIRE,650-10-10	ﾀｲﾔ	2	[TJ R]
-	06005-65010		TIRE,650-10-10	ﾀｲﾔ	2	[TJSR]
-	06007-65010		TIRE,650-10-10	ﾀｲﾔ	2	[TS R]
2	06711-65010		TUBE,650-10-10T	ﾁｭｰﾌﾞ	2	[TJ R][TJSR][TS R]
3	06701-65010		FLAP,650-10-10F	ﾌﾗｯﾌﾟ	2	[TJ R][TJSR][TS R]
A2	52356-80302		RIM-ASSY,500F-10	ﾘﾑｱｯｾﾝ	2	[TJ R][TJSR][TS R] INC.4-8
4	NO PART NO.	#	RIM,INSIDE	ﾘﾑ	2	[TJ R][TJSR][TS R]
5	NO PART NO.	#	RIM,OUTSIDE	ﾘﾑ	2	[TJ R][TJSR][TS R]
6	534F3-82001		BOLT	ﾎﾞﾙﾄ	16	[TJ R][TJSR][TS R]
7	02011-00012		WASHER	ﾜｯｼｬ	32	[TJ R][TJSR][TS R]
8	01400-00012		NUT	ﾅｯﾄ	16	[TJ R][TJSR][TS R]

FIG.89 REAR WHEEL [(TJ R,TJSR,TS R)/DR R]

(F7Z344J0) リヤーホイール

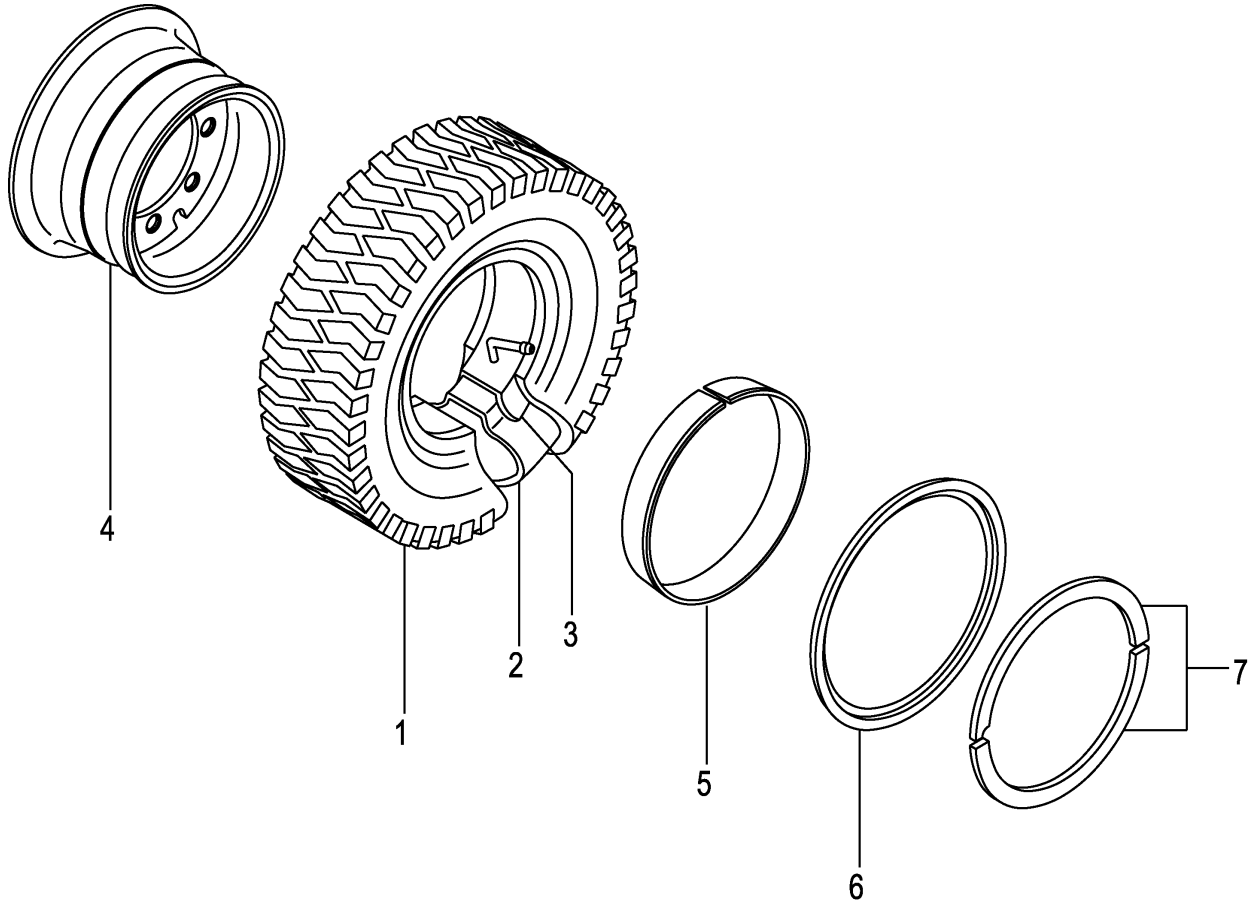

A:FD30C3Z FD30T3Z

Item No	Part No.	Mark	Description		Req'd	Remarks : Serial No.
A1	514J6-82201		WHEEL-ASSY,REAR	ﾘﾔｰﾎｲｰﾙｱｯｾﾝ	2	[TJ R/DR R] INC.1-7
-	539F7-40521		WHEEL-ASSY,REAR	ﾘﾔｰﾎｲｰﾙｱｯｾﾝ	2	[TJSR/DR R] INC.1-7
-	539F7-40721		WHEEL-ASSY,REAR	ﾘﾔｰﾎｲｰﾙｱｯｾﾝ	2	[TS R/DR R] INC.1-7
1	06006-65010		TIRE,650-10-10	ﾀｲﾔ	2	[TJ R/DR R]
-	06005-65010		TIRE,650-10-10	ﾀｲﾔ	2	[TJSR/DR R]
-	06007-65010		TIRE,650-10-10	ﾀｲﾔ	2	[TS R/DR R]
2	06711-65010		TUBE,650-10-10T	ﾁｭｰﾌﾞ	2	[TJ R/DR R][TJSR/DR R] [TS R/DR R]
3	06701-65010		FLAP,650-10-10F	ﾌﾗｯﾌﾟ	2	[TJ R/DR R][TJSR/DR R] [TS R/DR R]
A2	514J6-82211		RIM-ASSY,500F-10	ﾘﾑｱｯｾﾝ	2	[TJ R/DR R][TJSR/DR R] [TS R/DR R] INC.4-7
4	NO PART NO.	#	RIM	ﾘﾑ	2	[TJ R/DR R][TJSR/DR R] [TS R/DR R]
5	54236-83011		BAND	ﾊﾞﾝﾄﾞ	2	[TJ R/DR R][TJSR/DR R] [TS R/DR R]
6	54236-83021		FLANGE,SIDE	ﾌﾗﾝｼﾞ	2	[TJ R/DR R][TJSR/DR R] [TS R/DR R]
7	54236-83031		RING,LOCK	ﾘﾝｸﾞ	2	[TJ R/DR R][TJSR/DR R] [TS R/DR R]

FIG.90 REAR WHEEL [TSUR][TUJR][TUSR][TUWR][TUGR]

(F7Z344K0) リヤーホイール

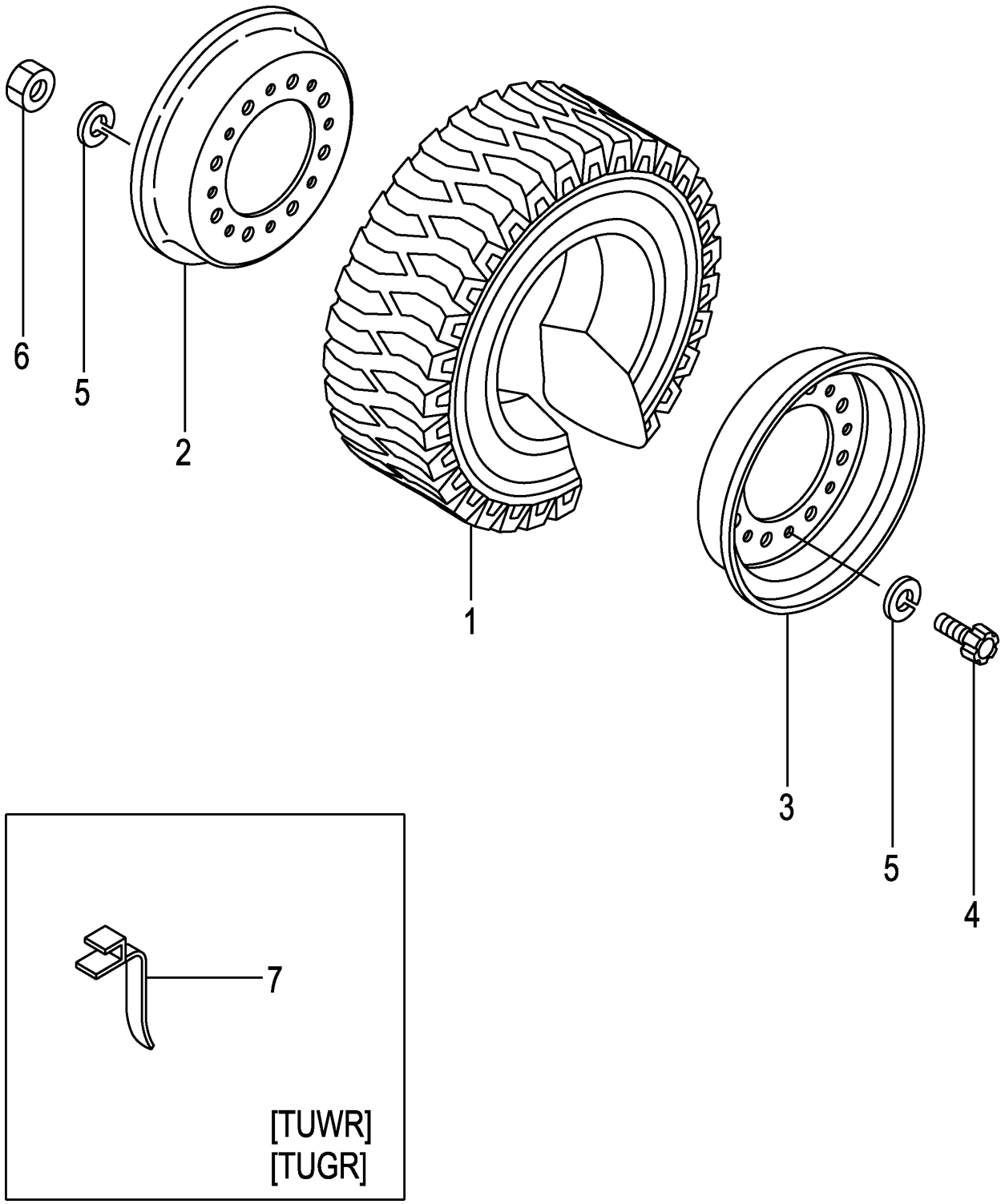

A:FD30C3Z FD30T3Z

Item No	Part No.	Mark	Description		Req'd	Remarks : Serial No.
A1	539F6-80301		WHEEL-ASSY,REAR	ﾘﾔｰﾎｲｰﾙｱｯｾﾝ	2	[TSUR] INC.1-6
-	52436-80701		WHEEL-ASSY,REAR	ﾘﾔｰﾎｲｰﾙｱｯｾﾝ	2	[TUJR] INC.1-6
-	52436-80701		WHEEL-ASSY,REAR	ﾘﾔｰﾎｲｰﾙｱｯｾﾝ	2	[TUJR/EX] INC.1-6
-	522Q6-80422		WHEEL-ASSY,REAR	ﾘﾔｰﾎｲｰﾙｱｯｾﾝ	2	[TUSR] INC.1-6
-	522Q6-80402		WHEEL-ASSY,REAR	ﾘﾔｰﾎｲｰﾙｱｯｾﾝ	2	[TUWR] INC.1-6
-	522Q6-80412		WHEEL-ASSY,REAR	ﾘﾔｰﾎｲｰﾙｱｯｾﾝ	2	[TUGR] INC.1-6
1	06807-65010		TIRE,UNIQUE,650-10	ﾀｲﾔ	2	[TSUR]
-	06806-65010		TIRE,UNIQUE,650-10	ﾀｲﾔ	2	[TUJR]
-	06807-65010		TIRE,UNIQUE,650-10	ﾀｲﾔ	2	[TUJR]
-	06807-65010		TIRE,UNIQUE,650-10	ﾀｲﾔ	2	[TUJR/EX]
-	06853-65010		TIRE,SOFTONE,650-10	ﾀｲﾔ	2	[TUSR]
-	06841-65010		TIRE,WHITE,650-10	ﾀｲﾔ	2	[TUWR]
-	06843-65010		TIRE,GREEN,650-10	ﾀｲﾔ	2	[TUGR]
A2	52356-80302		RIM-ASSY,500F-10	ﾘﾑｱｯｾﾝ	2	[TSUR][TUJR][TUSR][TUWR] [TUGR] INC.2-6
2	NO PART NO.	#	RIM,INSIDE	ﾘﾑ	2	[TSUR][TUJR][TUSR][TUWR] [TUGR]
3	NO PART NO.	#	RIM,OUTSIDE	ﾘﾑ	2	[TSUR][TUJR][TUSR][TUWR] [TUGR]
4	534F3-82001		BOLT	ﾎﾞﾙﾄ	16	[TSUR][TUJR][TUSR][TUWR] [TUGR]
5	02011-00012		WASHER	ﾜｯｼｬ	32	[TSUR][TUJR][TUSR][TUWR] [TUGR]
6	01400-00012		NUT	ﾅｯﾄ	16	[TSUR][TUJR][TUSR][TUWR] [TUGR]
7	571A6-82081		BELT,EARTH	ﾍﾞﾙﾄ	1	[TUWR][TUGR]

FIG.91 REAR WHEEL [TUJR/DR R]

(F7Z344L0) リヤーホイール

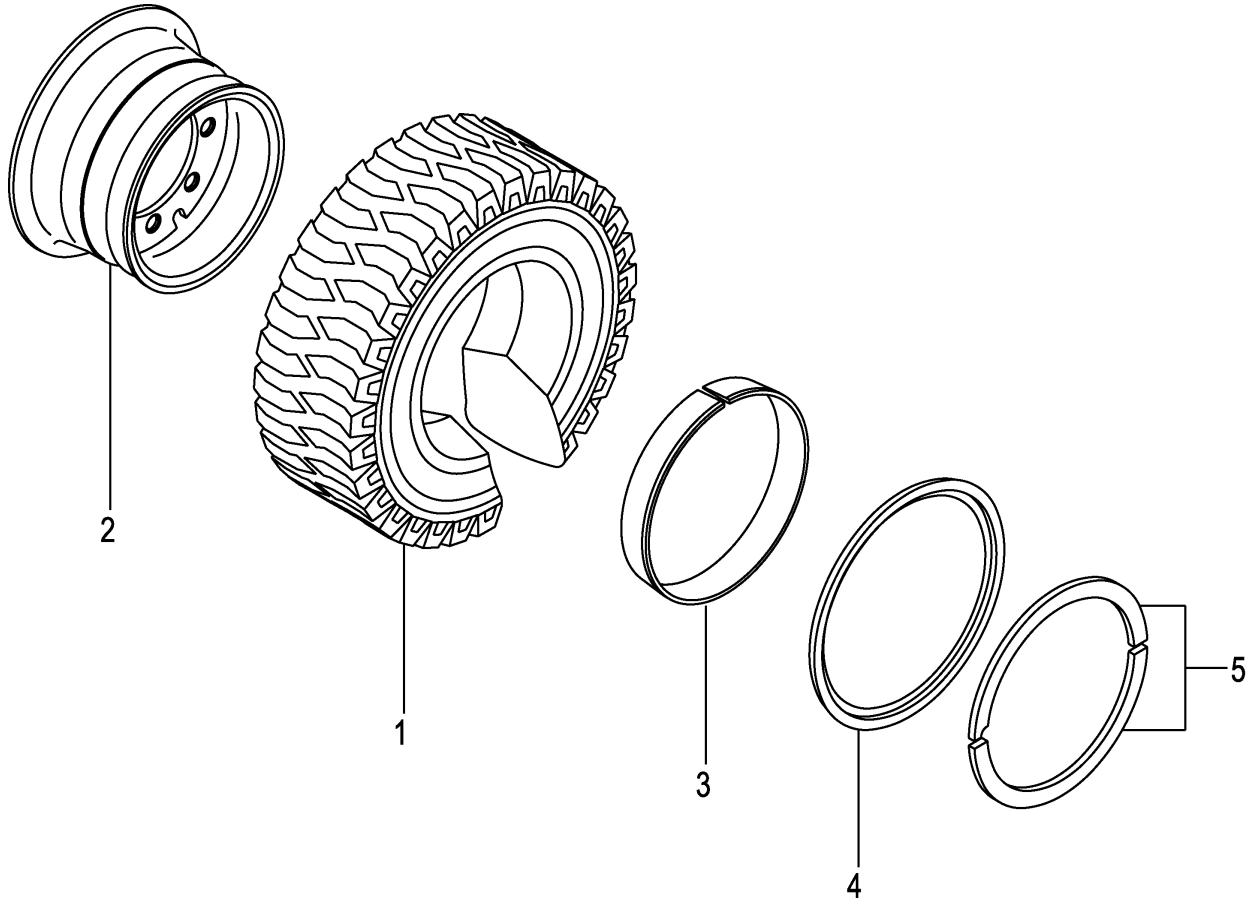

A:FD30C3Z FD30T3Z

Item No	Part No.	Mark	Description		Req'd	Remarks : Serial No.
A1	514J6-82231		WHEEL-ASSY,REAR	ﾘﾔｰﾎｲｰﾙｱｯｾﾝ	2	[TUJR/DR R] INC.1-5
1	06806-65010		TIRE,UNIQUE,650-10	ﾀｲﾔ	2	[TUJR/DR R]
A2	514J6-82211		RIM-ASSY,500F-10	ﾘﾑｱｯｾﾝ	2	[TUJR/DR R] INC.2-5
2	NO PART NO.	#	RIM	ﾘﾑ	2	[TUJR/DR R]
3	54236-83011		BAND	ﾊﾞﾝﾄﾞ	2	[TUJR/DR R]
4	54236-83021		FLANGE,SIDE	ﾌﾗﾝｼﾞ	2	[TUJR/DR R]
5	54236-83031		RING,LOCK	ﾘﾝｸﾞ	2	[TUJR/DR R]

FIG.92 REAR WHEEL [TRAR]

(F7Z344M0) リヤーホイール

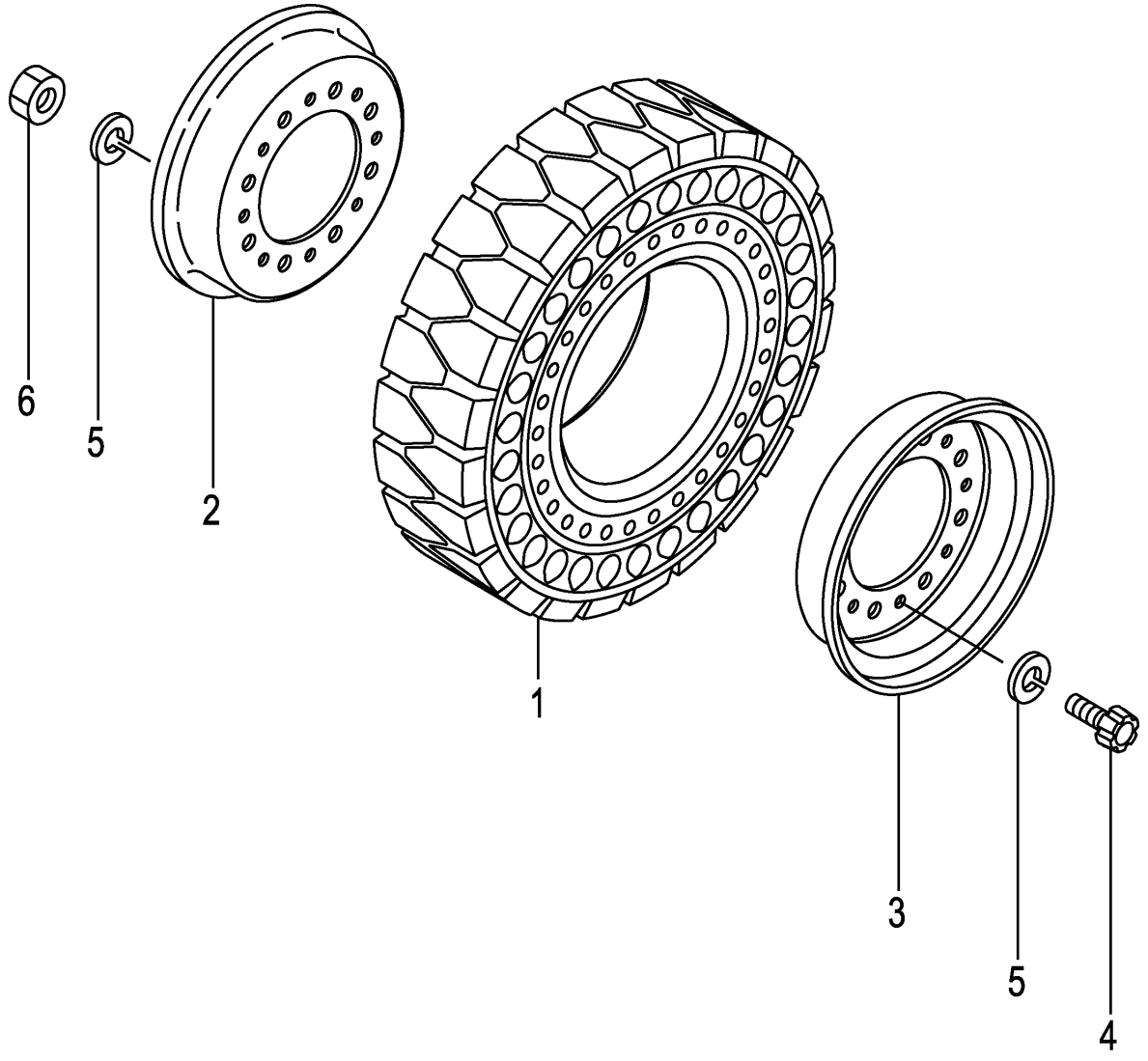

FIG.92

(F7Z344M0)

A:FD30C3Z FD30T3Z

Item No	Part No.	Mark	Description		Req'd	Remarks : Serial No.
A1	534F6-80271		WHEEL-ASSY,REAR	ﾘﾔｰﾎｲｰﾙｱｯｾﾝ	2	[TRAR] INC.1-6
1	516G6-85011		TIRE,AIR-BOSS,650-10	ﾀｲﾔ	2	[TRAR]
A2	52356-80302		RIM-ASSY,500F-10	ﾘﾑｱｯｾﾝ	2	[TRAR] INC.2-6
2	NO PART NO.	#	RIM,INSIDE	ﾘﾑ	2	[TRAR]
3	NO PART NO.	#	RIM,OUTSIDE	ﾘﾑ	2	[TRAR]
4	534F3-82001		BOLT	ﾎﾞﾙﾄ	16	[TRAR]
5	02011-00012		WASHER	ﾜｯｼｬ	32	[TRAR]
6	01400-00012		NUT	ﾅｯﾄ	16	[TRAR]

FIG.93 POWER CYLINDER

(F7Z34510) ﾊﾟﾜｰｼﾘﾝﾀﾞ

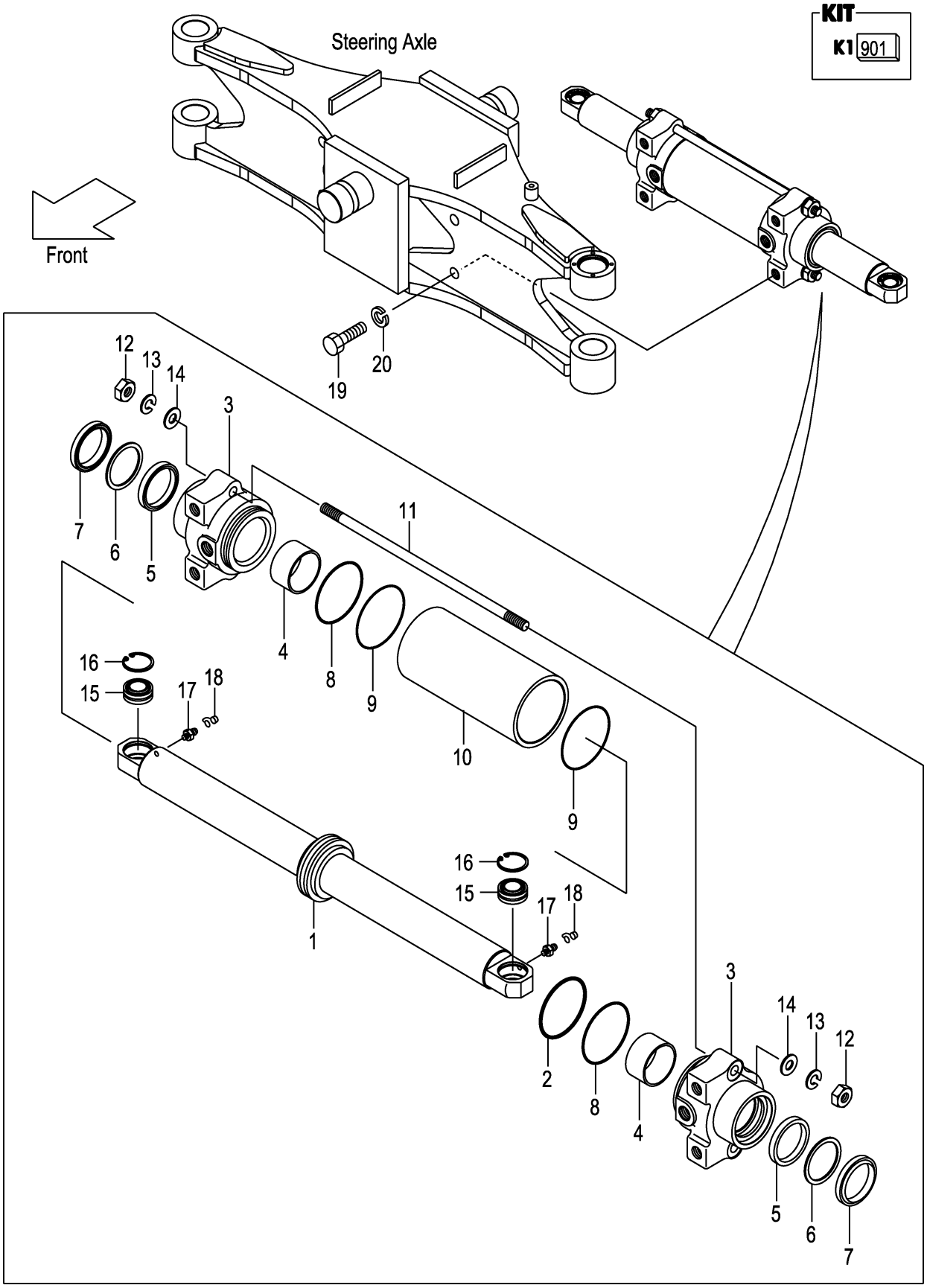

A:FD30C3Z FD30T3Z

Item No	Part No.	Mark	Description		Req'd	Remarks : Serial No.
A1	22N54-50201		CYL-ASSY,PS		1	INC.1-18
				ﾊﾟﾜｰｽﾃｱﾘﾝｸﾞｼﾘﾝﾀﾞｱｯｾﾝ		
901	22N54-59801	K1	KIT,OVERHAUL	ｵｰﾊﾞﾎｰﾙｷｯﾄ	1	INC.2,5-9
A2	22N54-50221		ROD-ASSY,PISTON	ﾋﾟｽﾄﾝﾛｯﾄﾞｱｯｾﾝ	1	INC.1,2
1	22N54-52001		ROD,PISTON	ﾛｯﾄﾞ	1	
2	514A2-42201	*	SEAL	ｼｰﾙ	1	
3	22N54-52101		CAP,CYL	ｷｬｯﾌﾟ	2	
4	22N54-52121		BUSHING,DU	ﾌﾞｯｼﾝｸﾞ	2	1-109
-	23460-53171		BUSHING,DU	ﾌﾞｯｼﾝｸﾞ	2	110-
5	97103-35431	*	PACKING	ﾊﾟｯｷﾝｸﾞ	2	
6	22658-52301	*	RING,BACK-UP	ﾘﾝｸﾞ	2	
7	22N54-52141	*	SEAL,DUST	ｼｰﾙ	2	
8	03350-00750	*	O-RING	Oﾘﾝｸﾞ	2	
9	22N54-52151	*	O-RING	Oﾘﾝｸﾞ	2	
10	22N54-52201		BODY,CYL	ﾎﾞﾃﾞｨ	1	
11	22N54-52251		BOLT	ﾎﾞﾙﾄ	2	
12	01400-00012		NUT	ﾅｯﾄ	4	
13	02010-00012		WASHER	ﾜｯｼｬ	4	
14	02000-00012		WASHER	ﾜｯｼｬ	4	
15	215E4-52231		JOINT,SPHERE-FACE	ｼﾞｮｲﾝﾄ	2	
16	02110-00035		RING,SNAP	ｽﾅｯﾌﾟﾘﾝｸﾞ	2	
17	214A8-52051		NIPPLE,GREASE	ﾆｯﾌﾟﾙ	2	
18	22199-12401		CAP,NIPPLE	ｷｬｯﾌﾟ	2	
19	01100-16040		BOLT	ﾎﾞﾙﾄ	4	
20	02010-00016		WASHER	ﾜｯｼｬ	4	

FIG.94 OVERHEAD GUARD

(F7Z35110) オーバヘッドガード

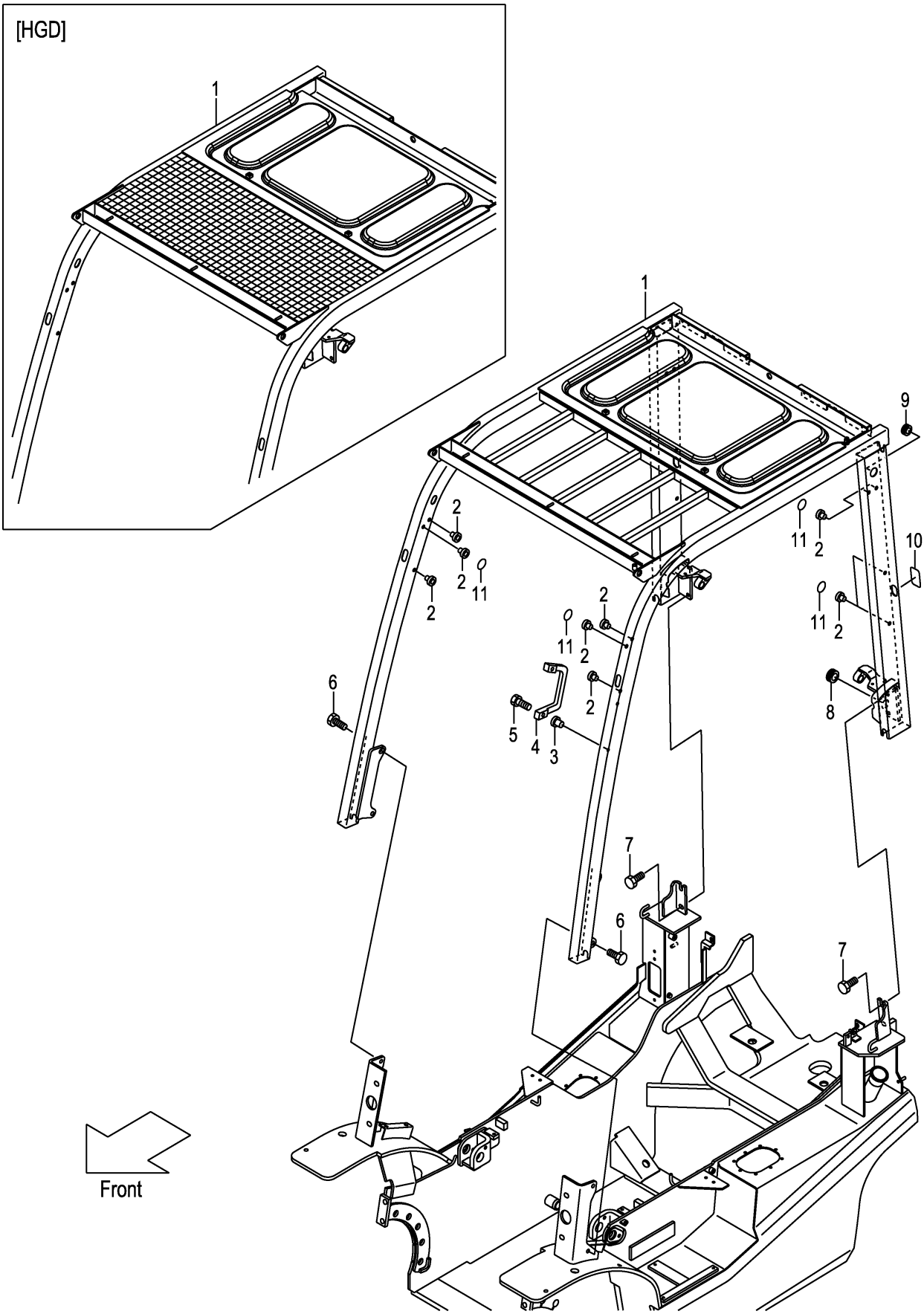

A:FD30C3Z FD30T3Z

Item No	Part No.	Mark	Description		Req'd	Remarks : Serial No.
1	22N55-10161		GUARD,HEAD	ｶﾞｰﾄﾞ	1	(WITHOUT SCB001,SCBCR)
-	52N52-90201		GUARD,HEAD	ｶﾞｰﾄﾞ	1	[HGD]
-	52N55-00101		GUARD,HEAD	ｶﾞｰﾄﾞ	1	[HGH060]
-	52N55-00111		GUARD,HEAD	ｶﾞｰﾄﾞ	1	[HGH100]
-	52N55-00121		GUARD,HEAD	ｶﾞｰﾄﾞ	1	[HGH150]
-	52N55-00131		GUARD,HEAD	ｶﾞｰﾄﾞ	1	[HGH200]
-	52N55-00141		GUARD,HEAD	ｶﾞｰﾄﾞ	1	[HGL]
2	514A5-12011		RIVET,POP	ﾘﾍﾞｯﾄ	4	1-109
						(WITHOUT SCB001,SCBCR)
-	514A5-12011		RIVET,POP	ﾘﾍﾞｯﾄ	14	110-
						(WITHOUT SCB001,SCBCR)
3	516G5-13151		RIVET,POP	ﾘﾍﾞｯﾄ	2	(WITHOUT SCB001,SCBCR)
4	516G5-13051		GRIP	ｸﾞﾘｯﾌﾟ	1	(WITHOUT SCB001,SCBCR)
5	01171-06025		BOLT	ﾎﾞﾙﾄ	2	(WITHOUT SCB001,SCBCR)
6	01186-12040		BOLT	ﾎﾞﾙﾄ	4	(WITHOUT SCB001,SCBCR)
7	01186-12025		BOLT	ﾎﾞﾙﾄ	4	(WITHOUT SCB001,SCBCR)
8	524W5-12091		GROMMET	ｸﾞﾛﾒｯﾄ	1	(WITHOUT SCB001,SCBCR)
9	27662-62721		GROMMET	ｸﾞﾛﾒｯﾄ	1	(WITHOUT SCB001,SCBCR)
10	22N55-13191		SEAT,HG	ｼｰﾄ	2	(WITHOUT SCB001,SCBCR)
11	22N55-13181		SEAL,PANEL-COVER	ｼｰﾙ	10	(WITHOUT SCB001,SCBCR)

FIG.95 FRONT LAMP BRACKET

(F7Z35120) フロントランプブラケット

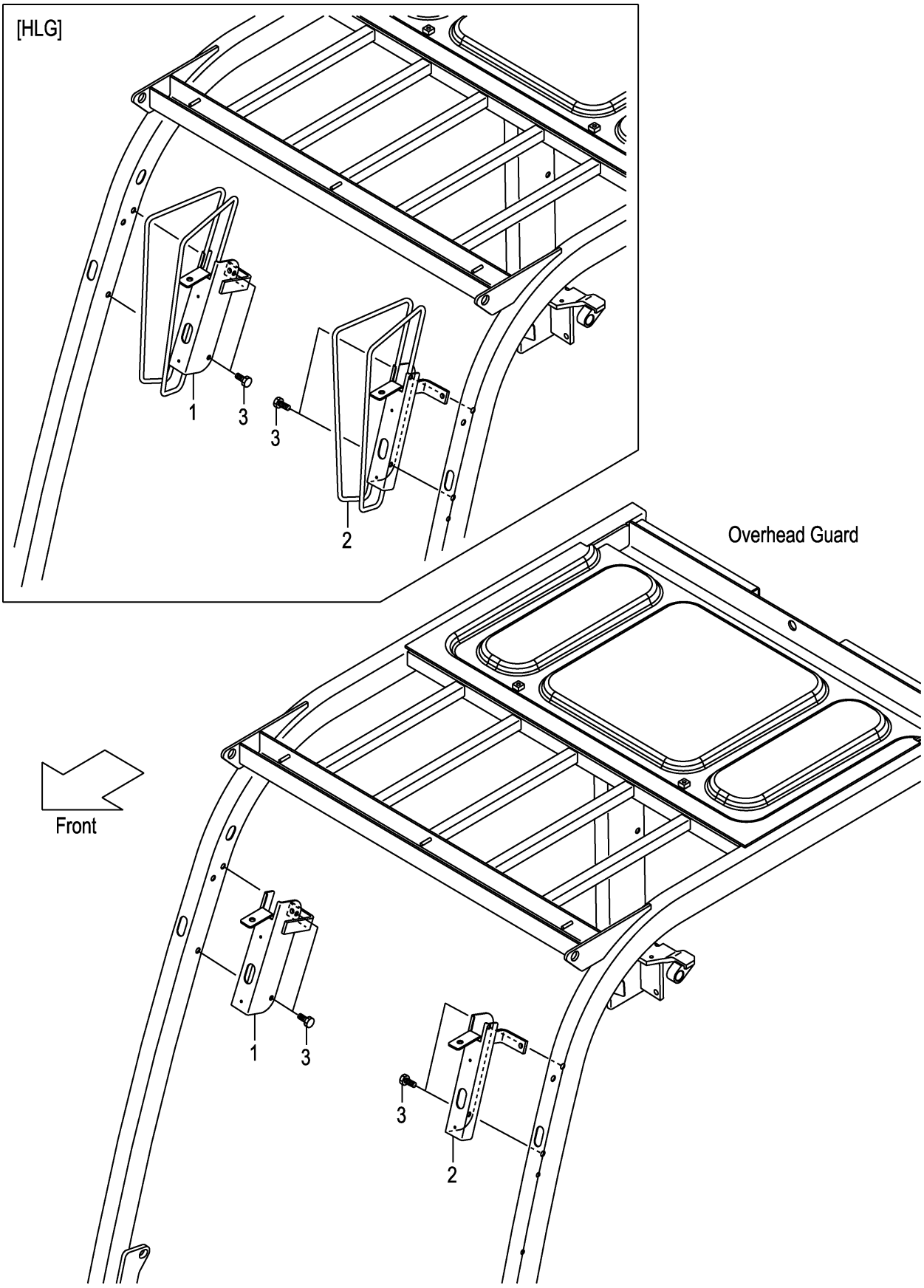

FIG.95

(F7Z35120)

A:FD30C3Z FD30T3Z

Item No	Part No.	Mark	Description	Req'd	Remarks : Serial No.
1	22N55-12271		BRACKET,HEAD-LAMP,RH ﾌﾞﾗｹｯﾄ	1	(WITHOUT SCB001,SCBCR,AW071)
-	52N55-12101		BRACKET,HEAD-LAMP,RH ﾌﾞﾗｹｯﾄ	1	[HLG]
2	22N55-12281		BRACKET,HEAD-LAMP,LH ﾌﾞﾗｹｯﾄ	1	(WITHOUT SCB001,SCBCR,AW071)
-	52N55-12111		BRACKET,HEAD-LAMP,LH ﾌﾞﾗｹｯﾄ	1	[HLG]
3	514A5-12021		BOLT ﾎﾞﾙﾄ	4	(WITHOUT SCB001,SCBCR,AW071)

FIG.96 FRONT LAMP BRACKET [HL][BKH]

(F7Z35130) フロントランプブラケット

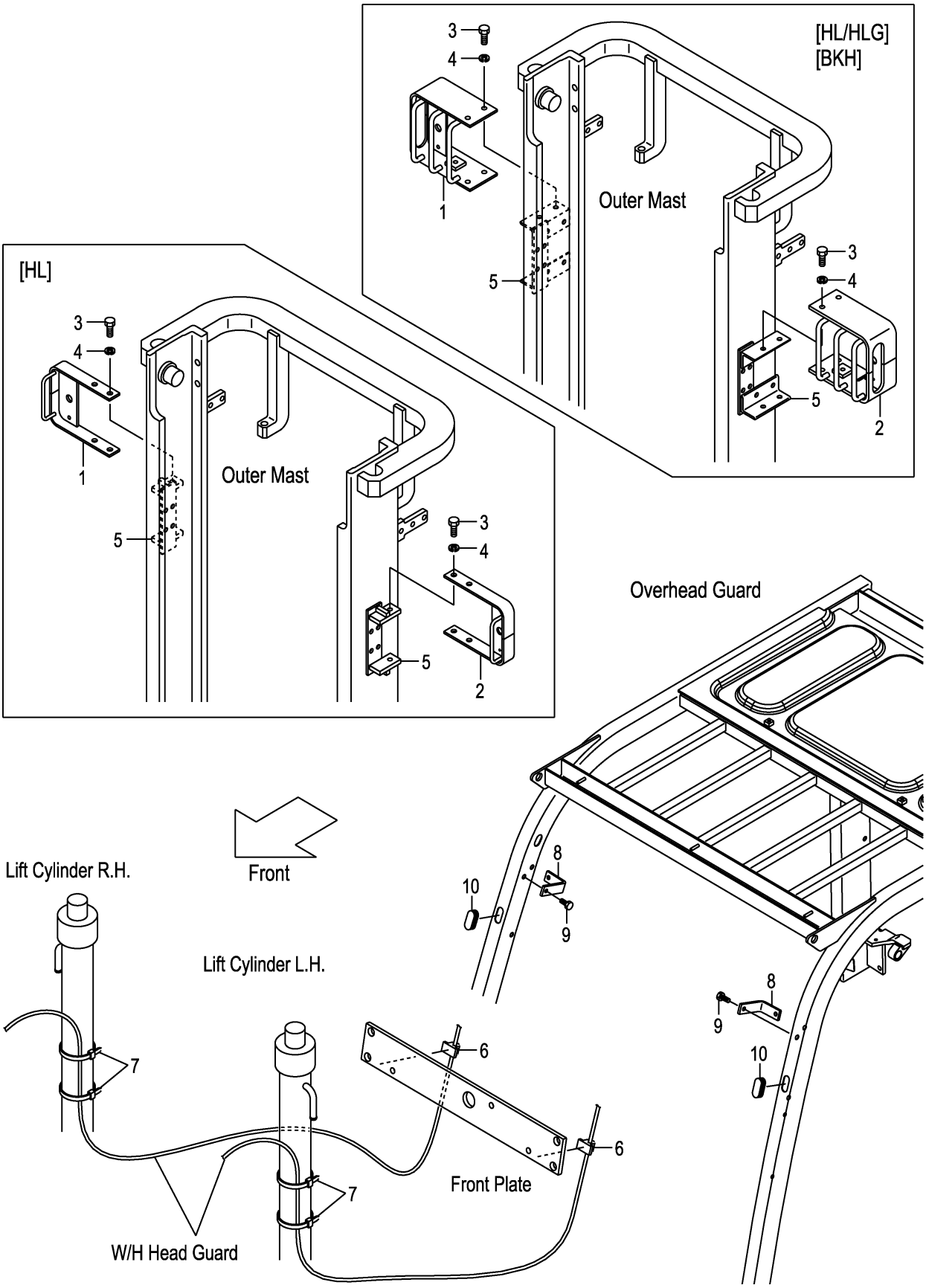

FIG.96

(F7Z35130)

A:FD30C3Z FD30T3Z

Item No	Part No.	Mark	Description	Req'd	Remarks : Serial No.
1	534A9-22001		BRACKET,HEAD-LAMP,RH ﾌﾞﾗｹｯﾄ	1	[HL]
-	534A4-22001		BRACKET,HEAD-LAMP,RH ﾌﾞﾗｹｯﾄ	1	[HL/HLG][BKH]
2	534A9-22011		BRACKET,HEAD-LAMP,LH ﾌﾞﾗｹｯﾄ	1	[HL]
-	534A4-22011		BRACKET,HEAD-LAMP,LH ﾌﾞﾗｹｯﾄ	1	[HL/HLG][BKH]
3	01100-12020		BOLT ﾎﾞﾙﾄ	4	[HL][HL/HLG][BKH]
4	02010-00012		WASHER ﾜｯｼｬ	4	[HL][HL/HLG][BKH]
5	641B0-12701		BRACKET,HL ﾌﾞﾗｹｯﾄ	2	[HL]
-	641B0-12751		BRACKET,BKH ﾌﾞﾗｹｯﾄ	2	[HL/HLG][BKH]
6	27732-42221		CLAMP,HARNESS ｸﾗﾝﾌﾟ	2	[HL][HL/HLG][BKH]
7	04913-11380		BAND,INSHULOCK ﾊﾞﾝﾄﾞ	4	[HL][HL/HLG][BKH]
8	22N55-12571		BRACKET,BACK-MIRROR ﾌﾞﾗｹｯﾄ	2	[HL][HL/HLG][BKH]
9	514A5-12021		BOLT ﾎﾞﾙﾄ	2	[HL][HL/HLG][BKH]
10	27662-63711		GROMMET ｸﾞﾛﾒｯﾄ	2	[HL][HL/HLG][BKH]

FIG.97 REAR LAMP COVER

(F7Z35140) ﾘﾔｰﾗﾝﾌﾟｶﾊﾞｰ

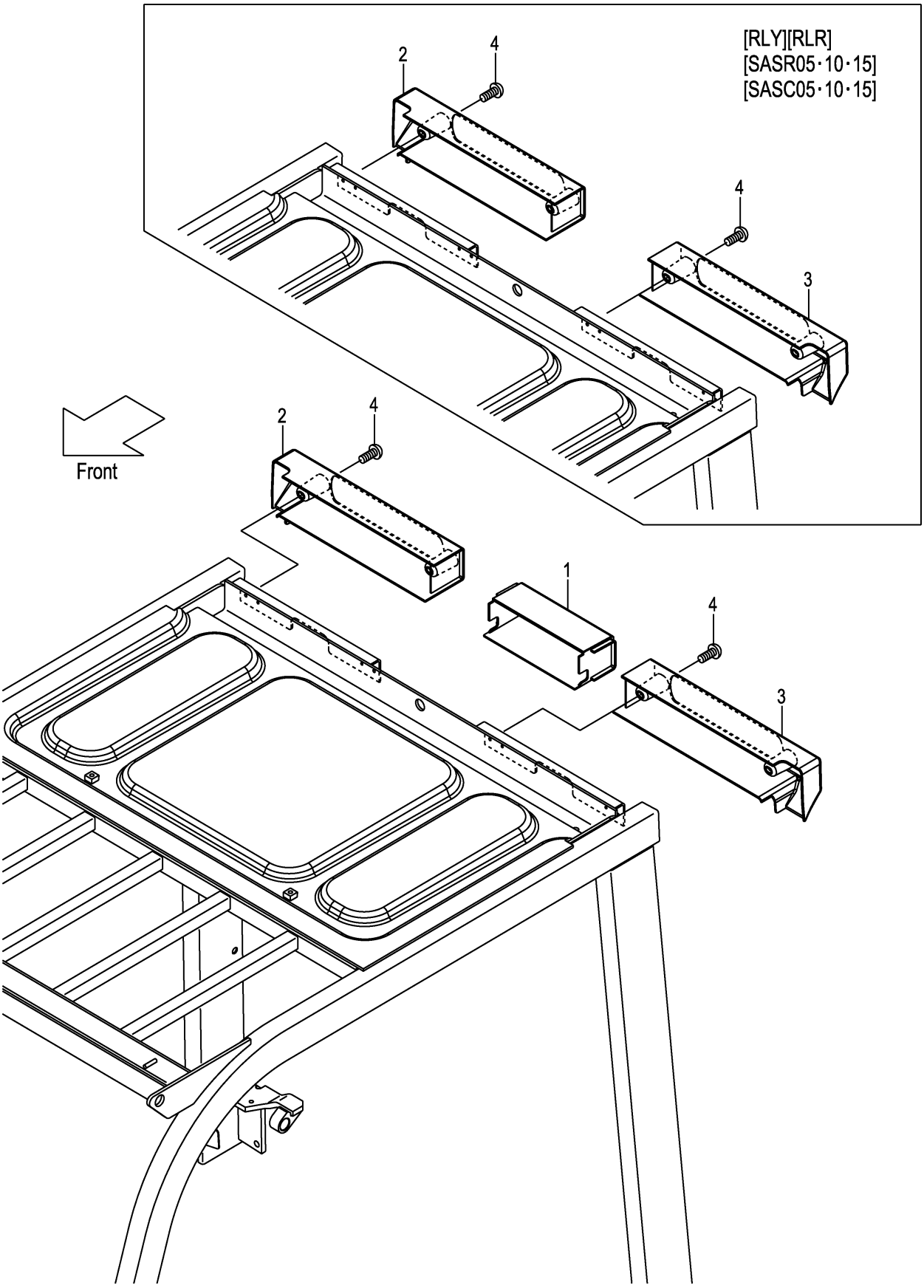

FIG.97

(F7Z35140)

A:FD30C3Z FD30T3Z

Item No	Part No.	Mark	Description	Req'd	Remarks : Serial No.
1	22N55-12701		COVER,REAR-LAMP ｶﾊﾞｰ	1	(WITHOUT RLY,RLR,SASR,SASC)
-	52N55-00511		COVER,REAR-LAMP ｶﾊﾞｰ	1	[HGH060][HGH100]
-	52N55-00521		COVER,REAR-LAMP ｶﾊﾞｰ	1	[HGH150][HGH200]
2	22N55-12711		COVER,REAR-LAMP,RH ｶﾊﾞｰ	1	(WITHOUT RLY/SCB,RLR/SCB)
3	22N55-12721		COVER,REAR-LAMP,LH ｶﾊﾞｰ	1	(WITHOUT RLY/SCB,RLR/SCB)
4	214A6-42252		SCREW ｽｸﾘｭ	4	(WITHOUT RLY/SCB,RLR/SCB)

FIG.98 REAR LAMP COVER [RRE]

(F7Z35150) ﾘﾔｰﾗﾝﾌﾟｶﾊﾞｰ

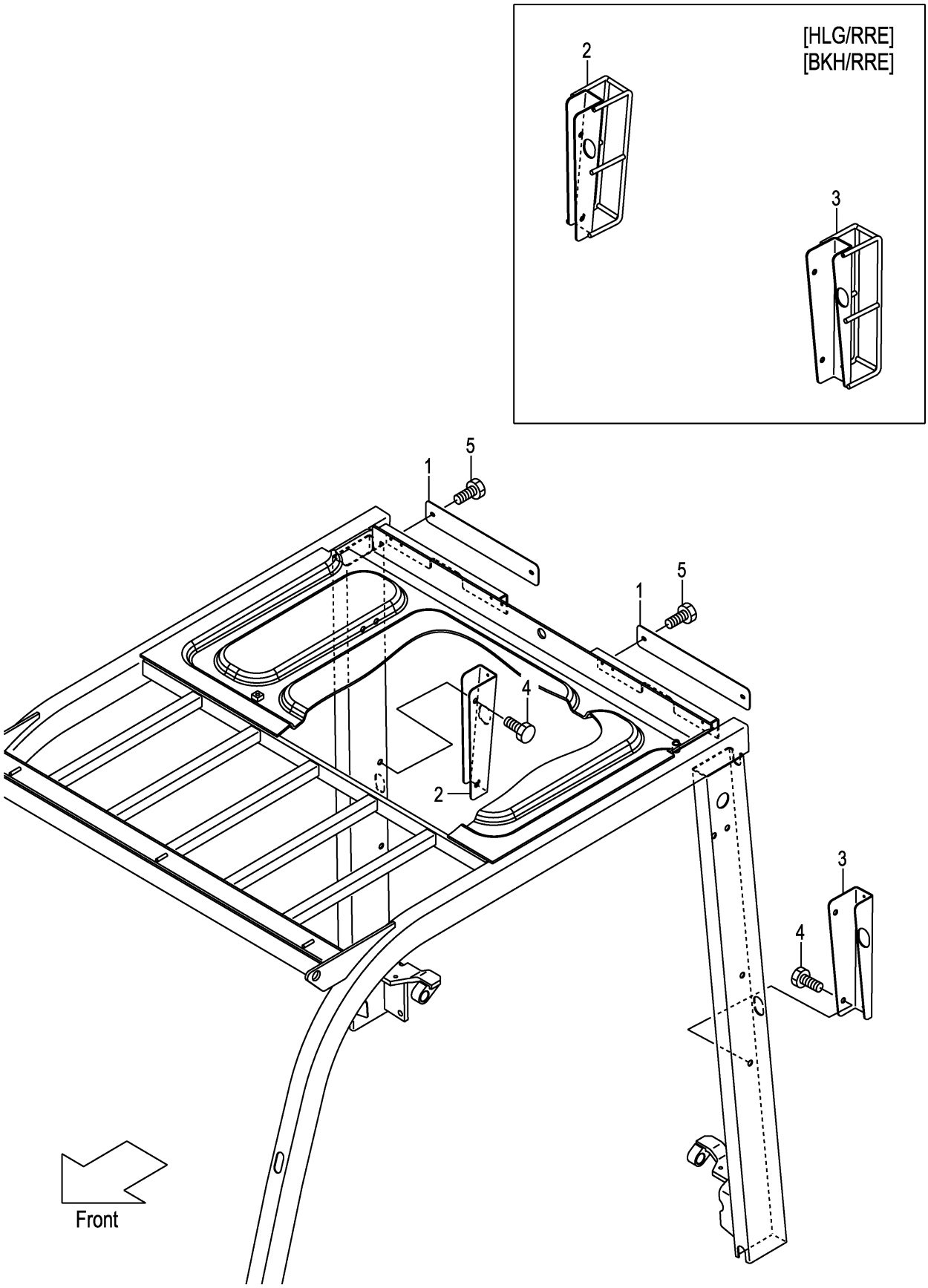

FIG.98

(F7Z35150)

A:FD30C3Z FD30T3Z

Item No	Part No.	Mark	Description	Req'd	Remarks : Serial No.
1	52N59-92051		PLATE ﾌﾟﾚｰﾄ	2	[RRE]
2	52N59-92021		BRACKET,REAR-LAMP,RH ﾌﾞﾗｹｯﾄ	1	[RRE]
-	52N55-12001		BRACKET,REAR-LAMP,RH ﾌﾞﾗｹｯﾄ	1	[HLG/RRE][BKH/RRE]
3	52N59-92031		BRACKET,REAR-LAMP,LH ﾌﾞﾗｹｯﾄ	1	[RRE]
-	52N55-12011		BRACKET,REAR-LAMP,LH ﾌﾞﾗｹｯﾄ	1	[HLG/RRE][BKH/RRE]
4	514A5-12021		BOLT ﾎﾞﾙﾄ	4	[RRE]
5	01031-06065		BOLT ﾎﾞﾙﾄ	4	[RRE]

FIG.99 HEAD GUARD PARTS

(F7Z351A0) ﾍｯﾄﾞｶﾞｰﾄﾞﾊﾟｰﾂ

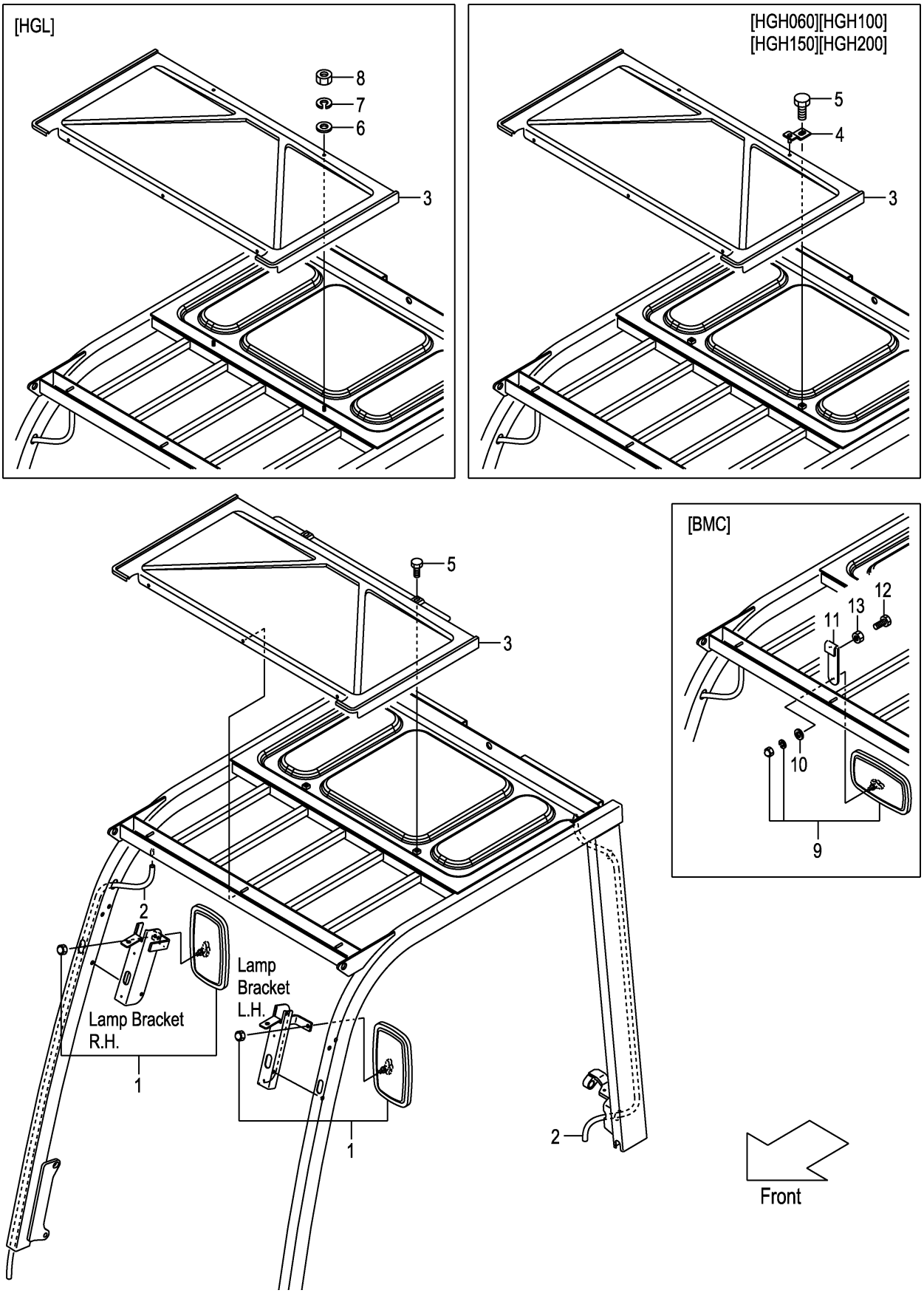

A:FD30C3Z FD30T3Z

Item No	Part No.	Mark	Description		Req'd	Remarks : Serial No.
1	239A9-92001		MIRROR	ﾐﾗｰ	2	
2	534A5-00401		HOSE,VINYL	ﾎｰｽ	2	(WITHOUT SCB001,SCBCR)
-	534A5-00411		HOSE,VINYL	ﾎｰｽ	2	[HGH060][HGH100]
-	577H5-13051		HOSE,VINYL	ﾎｰｽ	2	[HGH150][HGH200]
-	516M5-12301		HOSE,VINYL	ﾎｰｽ	2	[HGL]
3	22N55-12901		CANVAS	ｷｬﾝﾊﾞｽ	1	
-	52N55-00501		CANVAS	ｷｬﾝﾊﾞｽ	1	[HGH060][HGH100][HGH150] [HGH200][HGL]
4	52N55-00551		BRACKET	ﾌﾞﾗｹｯﾄ	2	[HGH060][HGH100][HGH150] [HGH200]
5	01185-08016		BOLT	ﾎﾞﾙﾄ	2	(WITHOUT HGL)
6	02000-00006		WASHER	ﾜｯｼｬ	2	[HGL]
7	02010-00006		WASHER	ﾜｯｼｬ	2	[HGL]
8	01400-00006		NUT	ﾅｯﾄ	2	[HGL]
9	239A9-92001		MIRROR	ﾐﾗｰ	1	[BMC]
10	222A9-32011		WASHER	ﾜｯｼｬ	1	[BMC]
11	539A9-32001		BRACKET,BACK-MIRROR	ﾌﾞﾗｹｯﾄ	1	[BMC]
12	01100-08025		BOLT	ﾎﾞﾙﾄ	2	[BMC]
13	01402-00008		NUT	ﾅｯﾄ	2	[BMC]

FIG.100 ACCEL PEDAL

(F7Z35220) アクセルペダル

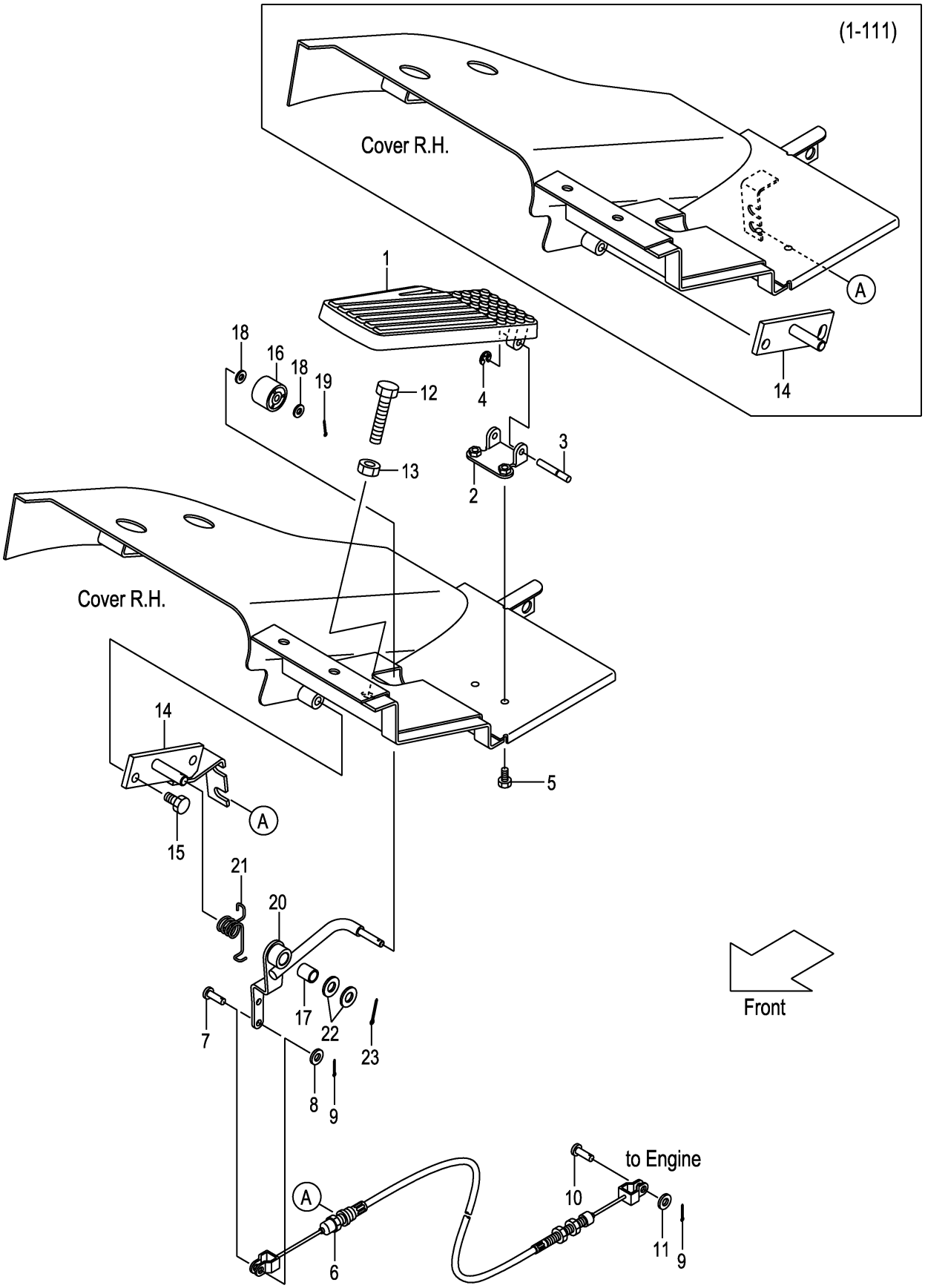

A:FD30C3Z FD30T3Z

Item No	Part No.	Mark	Description		Req'd	Remarks : Serial No.
A1	22N55-20211		PEDAL-ASSY,ACCEL	ｱｸｾﾙﾍﾟﾀﾞﾙｱｯｾﾝ	1	INC.1-4
1	NO PART NO.	#	PEDAL	ﾍﾟﾀﾞﾙ	1	
2	NO PART NO.	#	SUPPORT	ｻﾎﾟｰﾄ	1	
3	22N55-22121		SHAFT	ｼｬﾌﾄ	1	
4	22N55-22131		E-RING	Eﾘﾝｸﾞ	1	
5	01183-06012		BOLT	ﾎﾞﾙﾄ	2	
6	22U55-22102		CABLE,ACCEL	ｹｰﾌﾞﾙ	1	
7	02262-06015		PIN,CLEVIS	ﾋﾟﾝ	1	
8	02000-00006		WASHER	ﾜｯｼｬ	1	
9	02200-16015		PIN,COTTER	ﾋﾟﾝ	2	
10	22717-40061		PIN,CLEVIS	ﾋﾟﾝ	1	
11	02000-00005		WASHER	ﾜｯｼｬ	1	
12	01100-10040		BOLT	ﾎﾞﾙﾄ	1	
13	01400-00010		NUT	ﾅｯﾄ	1	
14	22N55-22011		BRACKET,ACCEL-LINK	ﾌﾞﾗｹｯﾄ	1	1-111
-	20A75-22001		BRACKET,ACCEL-LINK	ﾌﾞﾗｹｯﾄ	1	112-
15	01185-08016		BOLT	ﾎﾞﾙﾄ	2	
A2	22N55-20201		LINK-ASSY,ACCEL	ｱｸｾﾙﾘﾝｸｱｯｾﾝ	1	1-111
						INC.16-20
-	20A75-20201		LINK-ASSY,ACCEL	ｱｸｾﾙﾘﾝｸｱｯｾﾝ	1	112-
						INC.16-20
16	214A5-22001		ROLLER	ﾛｰﾗ	1	
17	23655-22101		BUSHING	ﾌﾞｯｼﾝｸﾞ	1	1-111
-	256C1-12111		BUSHING	ﾌﾞｯｼﾝｸﾞ	1	112-
18	02000-00006		WASHER	ﾜｯｼｬ	2	
19	02200-16010		PIN,COTTER	ﾋﾟﾝ	1	
20	NO PART NO.	#	LINK,ACCEL	ﾘﾝｸ	1	1-111
-	NO PART NO.	#	LINK,ACCEL	ﾘﾝｸ	1	112-
21	22N55-22031		SPRING	ｽﾌﾟﾘﾝｸﾞ	1	
22	02000-00010		WASHER	ﾜｯｼｬ	2	1-111
-	02000-00012		WASHER	ﾜｯｼｬ	2	112-
23	02200-03020		PIN,COTTER	ﾋﾟﾝ	1	

FIG.101 FOOT PEDAL (CLUTCH)

(F7Z35410) ﾌｯﾄﾍﾟﾀﾞﾙ

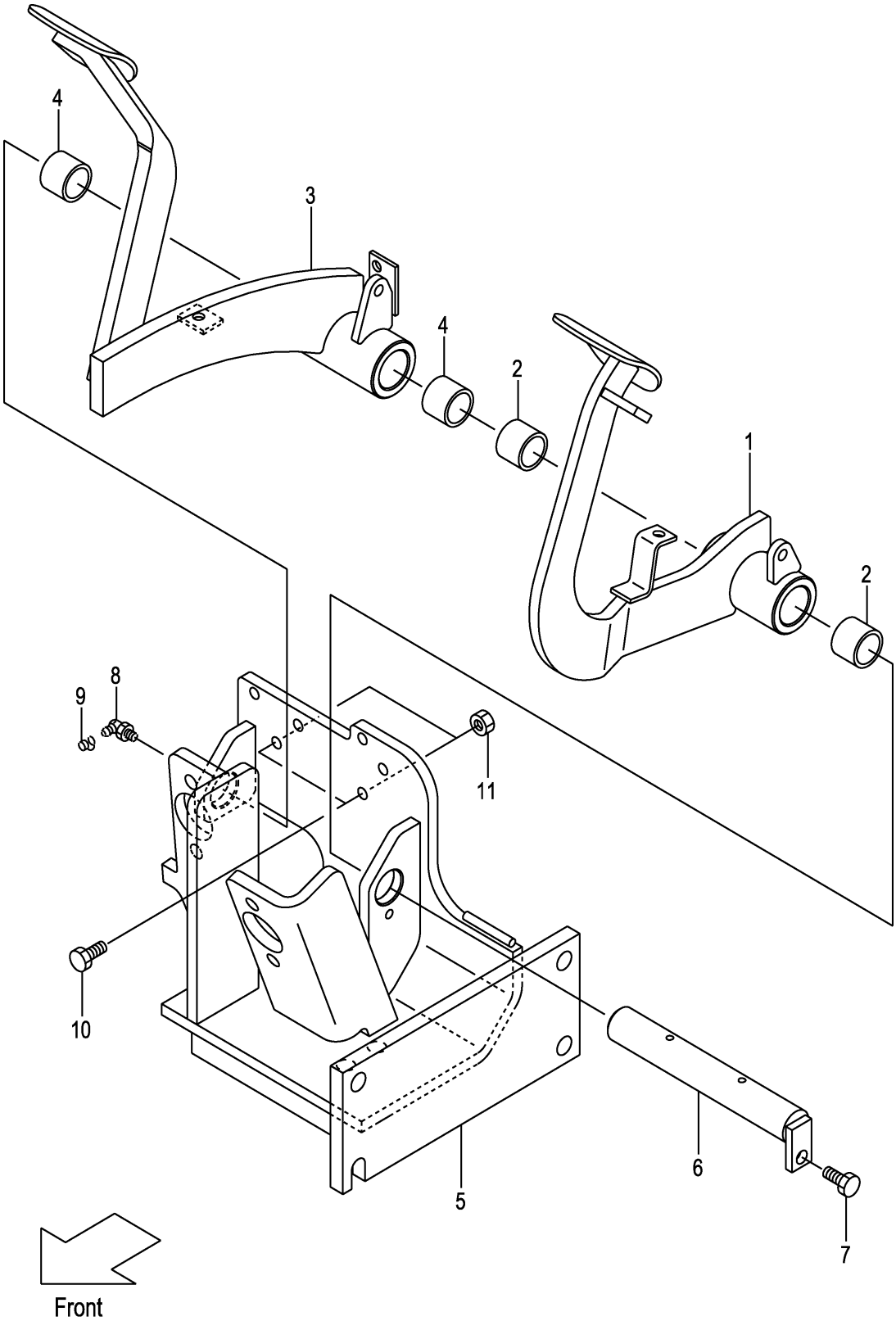

A:FD30C3Z

Item No	Part No.	Mark	Description		Req'd	Remarks : Serial No.
A1	22N45-30303		PEDAL-ASSY,CLUTCH	ｸﾗｯﾁﾍﾟﾀﾞﾙｱｯｾﾝ	1	INC.1,2
1	NO PART NO.	#	PEDAL,CLUTCH	ﾍﾟﾀﾞﾙ	1	
2	23655-42421		BUSHING,PEDAL	ﾌﾞｯｼﾝｸﾞ	2	
A2	22N45-40302		PEDAL-ASSY,BRAKE	ﾌﾞﾚｰｷﾍﾟﾀﾞﾙｱｯｾﾝ	1	INC.3,4
3	NO PART NO.	#	PEDAL,BRAKE	ﾍﾟﾀﾞﾙ	1	
4	23655-42421		BUSHING,PEDAL	ﾌﾞｯｼﾝｸﾞ	2	
5	22N45-40202		BRACKET,PEDAL	ﾌﾞﾗｹｯﾄ	1	
6	22N45-42101		SHAFT,PEDAL	ｼｬﾌﾄ	1	
7	01183-08016		BOLT	ﾎﾞﾙﾄ	1	
8	04901-00190		FITTING	ﾌｨｯﾃｨﾝｸﾞ	1	
9	22199-12401		CAP,NIPPLE	ｷｬｯﾌﾟ	1	
10	01100-10025		BOLT	ﾎﾞﾙﾄ	2	
11	01402-00010		NUT	ﾅｯﾄ	2	

FIG.102 FOOT PEDAL (TOR-CON)

(F7Z35420) ﾌｯﾄﾍﾟﾀﾞﾙ

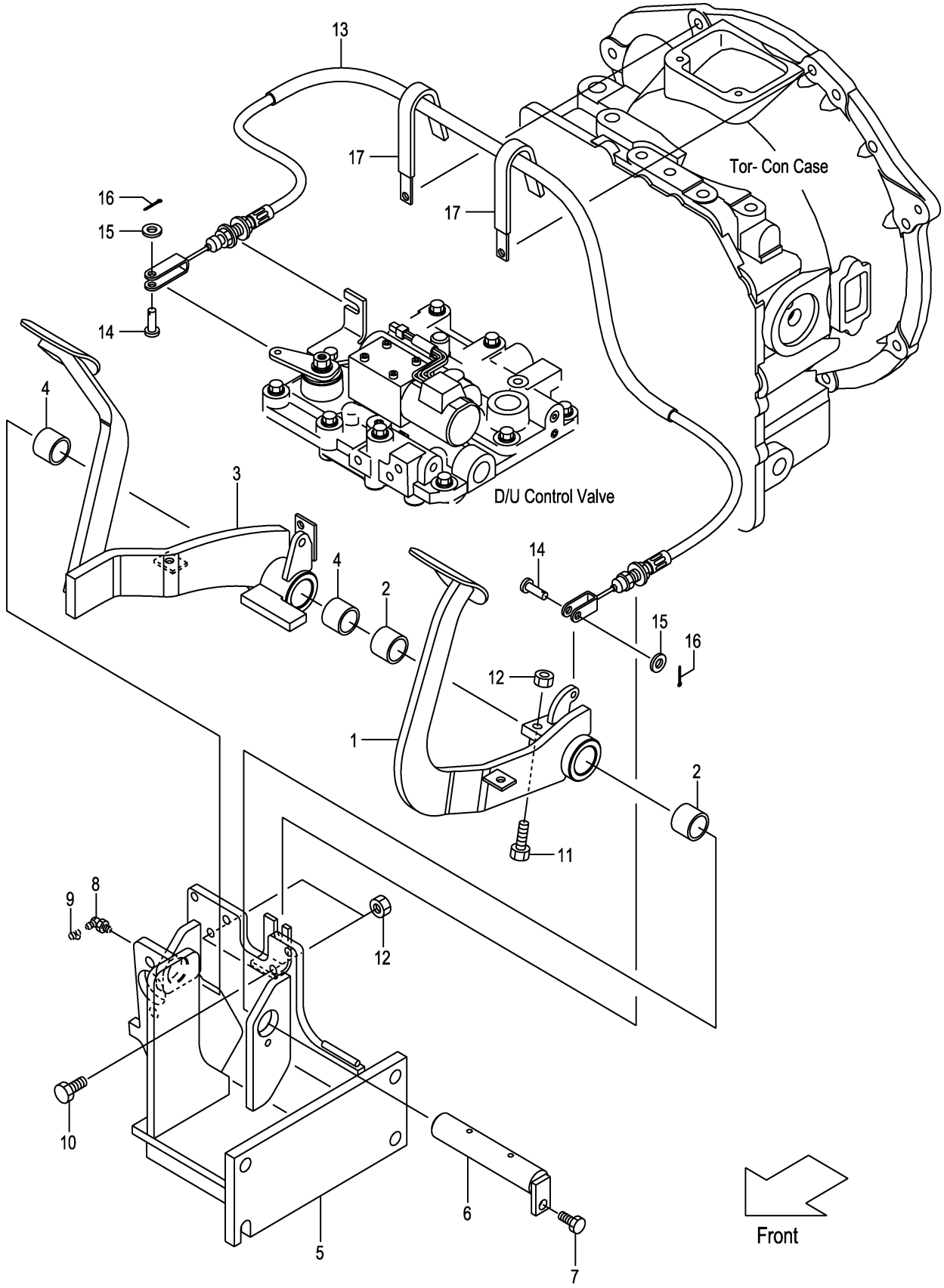

A:FD30T3Z

Item No	Part No.	Mark	Description		Req'd	Remarks : Serial No.
A1	22N55-40402		PEDAL-ASSY,INCHING	ｲﾝﾁﾝｸﾞﾍﾟﾀﾞﾙｱｯｾﾝ	1	INC.1,2
1	NO PART NO.	#	PEDAL,INCHING	ﾍﾟﾀﾞﾙ	1	
2	23655-42421		BUSHING,PEDAL	ﾌﾞｯｼﾝｸﾞ	2	
A2	22N55-40302		PEDAL-ASSY,BRAKE	ﾌﾞﾚｰｷﾍﾟﾀﾞﾙｱｯｾﾝ	1	INC.3,4
3	NO PART NO.	#	PEDAL,BRAKE	ﾍﾟﾀﾞﾙ	1	
4	23655-42421		BUSHING,PEDAL	ﾌﾞｯｼﾝｸﾞ	2	
5	22N55-40202		BRACKET,PEDAL	ﾌﾞﾗｹｯﾄ	1	
6	22N55-42101		SHAFT,PEDAL	ｼｬﾌﾄ	1	
7	01183-08016		BOLT	ﾎﾞﾙﾄ	1	
8	04901-00190		FITTING	ﾌｨｯﾃｨﾝｸﾞ	1	
9	22199-12401		CAP,NIPPLE	ｷｬｯﾌﾟ	1	
10	01100-10025		BOLT	ﾎﾞﾙﾄ	2	
11	01100-10030		BOLT	ﾎﾞﾙﾄ	1	1-109
-	01120-10040		BOLT	ﾎﾞﾙﾄ	1	110-
12	01402-00010		NUT	ﾅｯﾄ	3	
13	22N55-42601		CABLE,INCHING	ｹｰﾌﾞﾙ	1	
14	02262-06020		PIN,CLEVIS	ﾋﾟﾝ	2	
15	02000-00006		WASHER	ﾜｯｼｬ	2	
16	02200-16015		PIN,COTTER	ﾋﾟﾝ	2	
17	214A2-42331		CLIP	ｸﾘｯﾌﾟ	2	110-

FIG.103 FOOT PEDAL CYLINDER (CLUTCH)

(F7Z35440) ﾌｯﾄﾍﾟﾀﾞﾙｼﾘﾝﾀﾞ

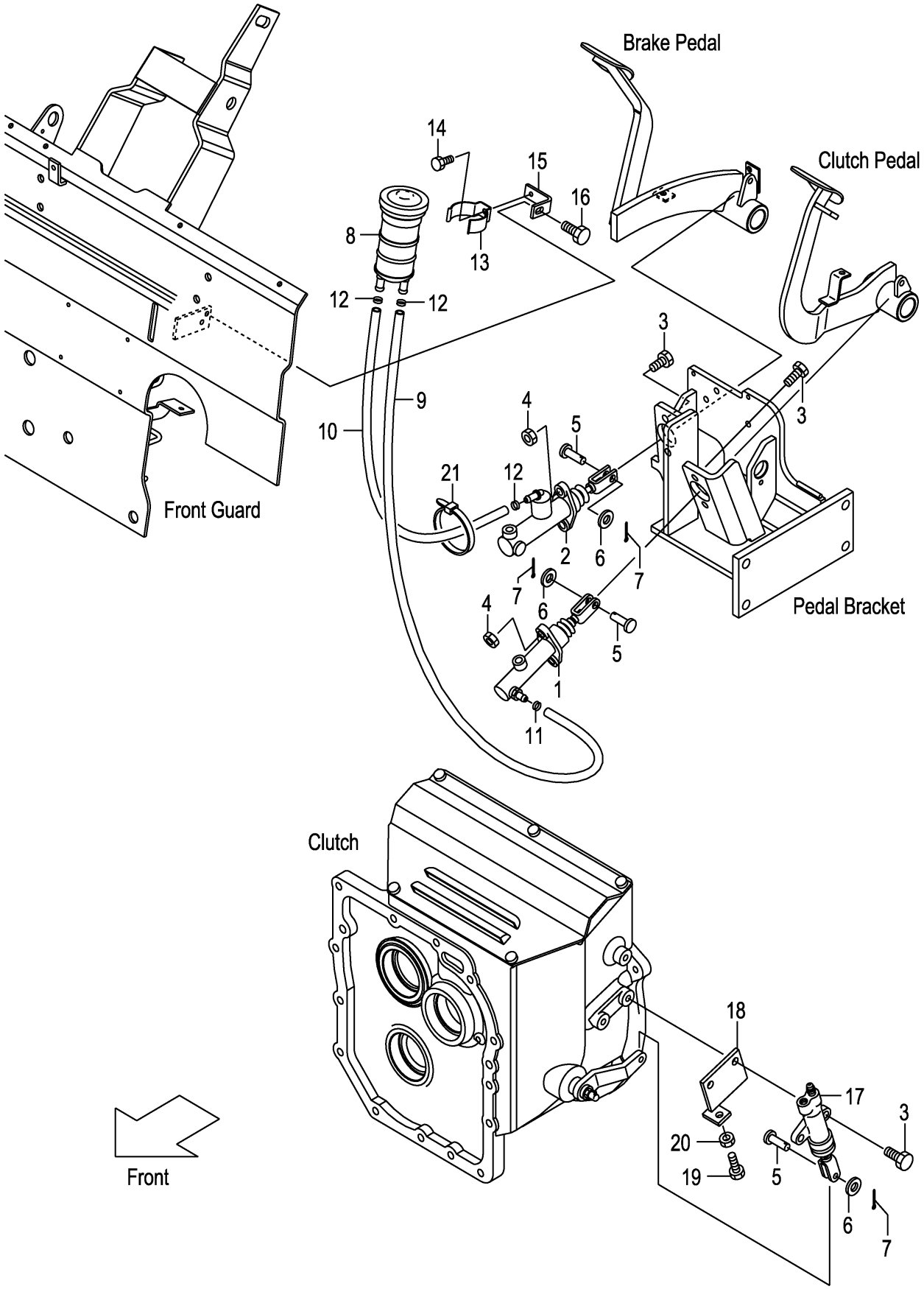

A:FD30C3Z

Item No	Part No.	Mark	Description		Req'd	Remarks : Serial No.
1	239A5-40501		CYL,CLUTCH-MASTER	ｼﾘﾝﾀﾞ	1	SEE FIG.108
2	27045-40302		CYL,BRAKE-MASTER	ｼﾘﾝﾀﾞ	1	SEE FIG.109
3	01184-10030		BOLT	ﾎﾞﾙﾄ	6	
4	01400-00010		NUT	ﾅｯﾄ	4	
5	02262-08025		PIN,CLEVIS	ﾋﾟﾝ	3	
6	02000-00008		WASHER	ﾜｯｼｬ	3	
7	02200-02020		PIN,COTTER	ﾋﾟﾝ	3	
8	216G5-42011		TANK,RESERVE	ﾀﾝｸ	1	
9	22N45-32151		HOSE,RESERVE	ﾎｰｽ	1	
10	22N45-32161		HOSE,RESERVE	ﾎｰｽ	1	
11	25595-42491		BAND,HOSE	ﾊﾞﾝﾄﾞ	1	
12	25785-43091		BAND,HOSE	ﾊﾞﾝﾄﾞ	3	
13	224G5-42061		CLIP,RESERVE-TANK	ｸﾘｯﾌﾟ	1	
14	01183-06010		BOLT	ﾎﾞﾙﾄ	1	
15	22N55-42141		BRACKET	ﾌﾞﾗｹｯﾄ	1	
16	01185-08016		BOLT	ﾎﾞﾙﾄ	1	
17	214A5-32312		CYL,CLUTCH-RELEASE	ｼﾘﾝﾀﾞ	1	SEE FIG.110
18	22N45-32201		BRACKET,RELEASE-CYL	ﾌﾞﾗｹｯﾄ	1	
19	01100-10025		BOLT	ﾎﾞﾙﾄ	1	
20	01402-00010		NUT	ﾅｯﾄ	1	
21	04913-11100		BAND	ﾊﾞﾝﾄﾞ	1	

FIG.104 FOOT PEDAL CYLINDER (TOR-CON)

(F7Z35450) ﾌｯﾄﾍﾟﾀﾞﾙｼﾘﾝﾀﾞ

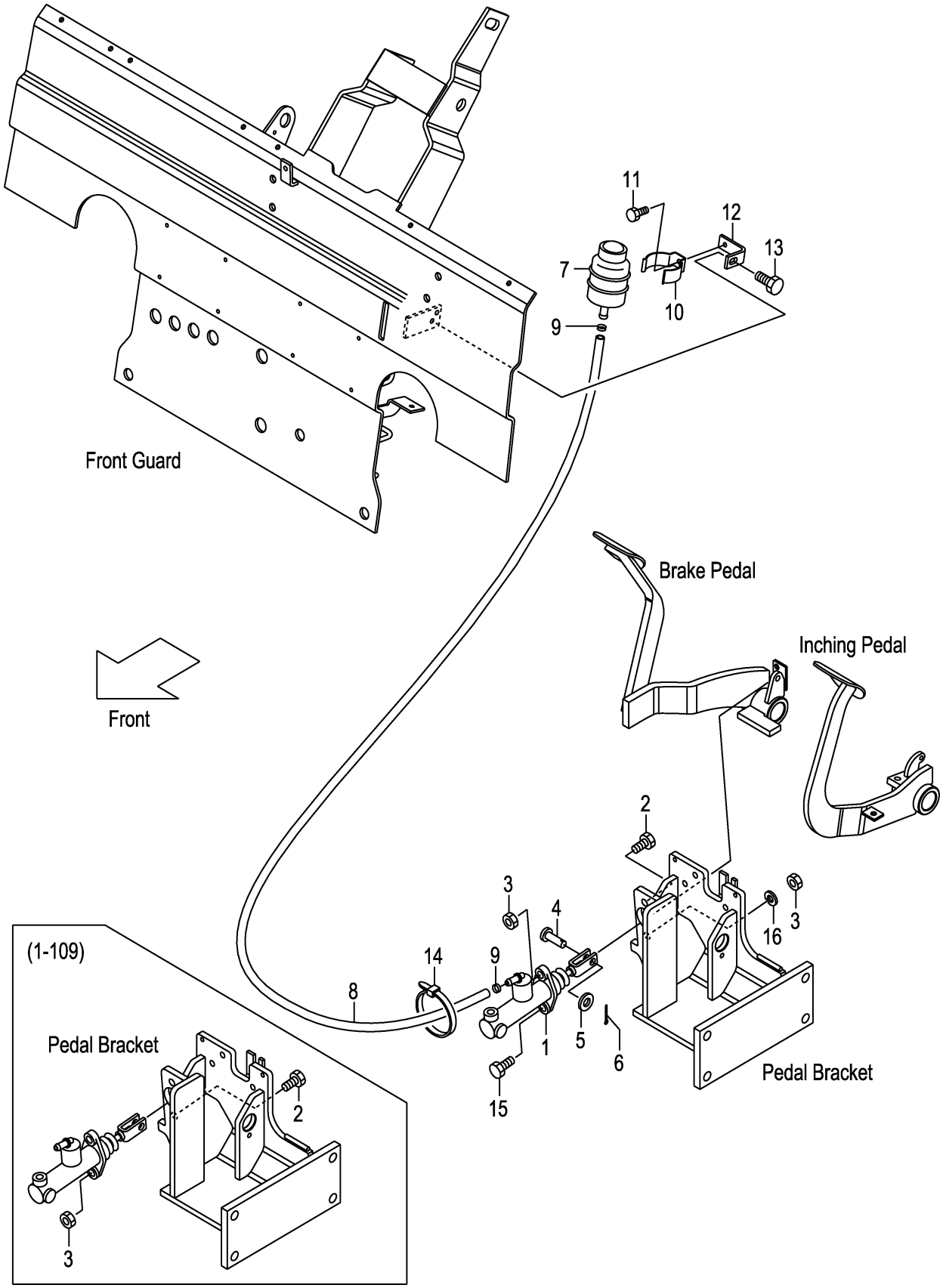

A:FD30T3Z

Item No	Part No.	Mark	Description		Req'd	Remarks : Serial No.
1	27045-40302		CYL,BRAKE-MASTER	ｼﾘﾝﾀﾞ	1	SEE FIG.109
2	01184-10030		BOLT	ﾎﾞﾙﾄ	2	1-109
-	01184-10030		BOLT	ﾎﾞﾙﾄ	1	110-
3	01400-00010		NUT	ﾅｯﾄ	2	
4	02262-08025		PIN,CLEVIS	ﾋﾟﾝ	1	
5	02000-00008		WASHER	ﾜｯｼｬ	1	
6	02200-02020		PIN,COTTER	ﾋﾟﾝ	1	
7	23775-42101		TANK,RESERVE	ﾀﾝｸ	1	
8	27045-42371		HOSE,RESERVE	ﾎｰｽ	1	1-109
-	22655-42591		HOSE,RESERVE	ﾎｰｽ	1	110-
9	25595-42491		BAND,HOSE	ﾊﾞﾝﾄﾞ	2	
10	224G5-42061		CLIP,RESERVE-TANK	ｸﾘｯﾌﾟ	1	
11	01183-06010		BOLT	ﾎﾞﾙﾄ	1	
12	22N55-42141		BRACKET	ﾌﾞﾗｹｯﾄ	1	
13	01185-08016		BOLT	ﾎﾞﾙﾄ	1	
14	04913-11100		BAND	ﾊﾞﾝﾄﾞ	1	
15	01100-10030		BOLT	ﾎﾞﾙﾄ	1	110-
16	02010-00010		WASHER	ﾜｯｼｬ	1	110-

FIG.105 BRAKE PIPE (CLUTCH)

(F7Z35490) ﾌﾞﾚｰｷﾊﾟｲﾌﾟ

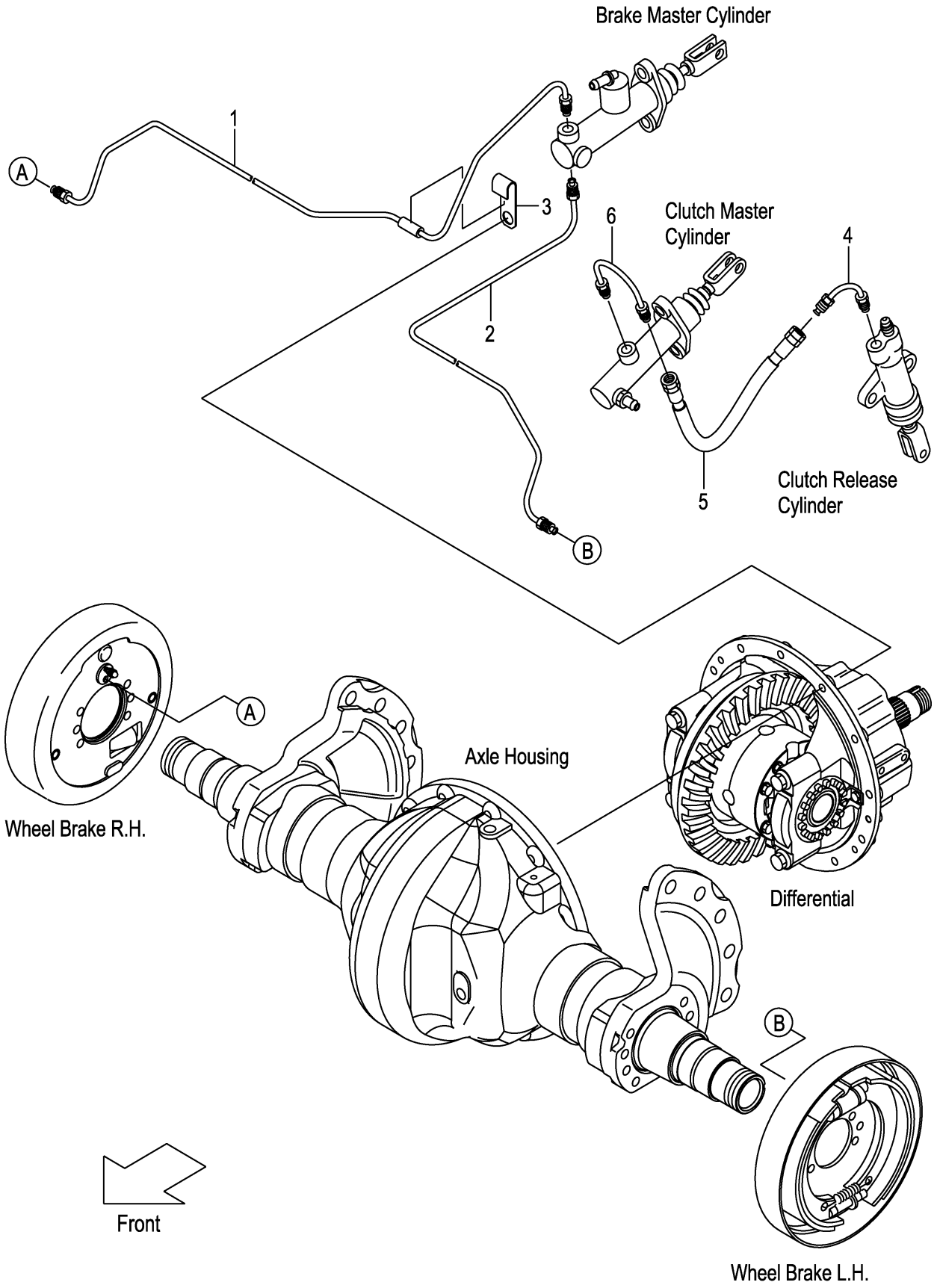

FIG.105

(F7Z35490)

A:FD30C3Z

Item No	Part No.	Mark	Description		Req'd	Remarks : Serial No.
1	22N85-42301		PIPE,BRAKE,RH	ﾊﾟｲﾌﾟ	1	
2	22N85-42401		PIPE,BRAKE,LH	ﾊﾟｲﾌﾟ	1	
3	22N55-42171		CLIP,PIPE	ｸﾘｯﾌﾟ	1	
4	239A5-42471		PIPE,CLUTCH-MASTER	ﾊﾟｲﾌﾟ	1	
5	240A5-42411		HOSE,BRAKE	ﾎｰｽ	1	1-109
-	22N45-32131		HOSE,BRAKE	ﾎｰｽ	1	110-
6	22N45-32101		PIPE,MASTER-CYL	ﾊﾟｲﾌﾟ	1	

FIG.106 BRAKE PIPE (TOR-CON)

(F7Z354A0) ﾌﾞﾚｰｷﾊﾟｲﾌﾟ

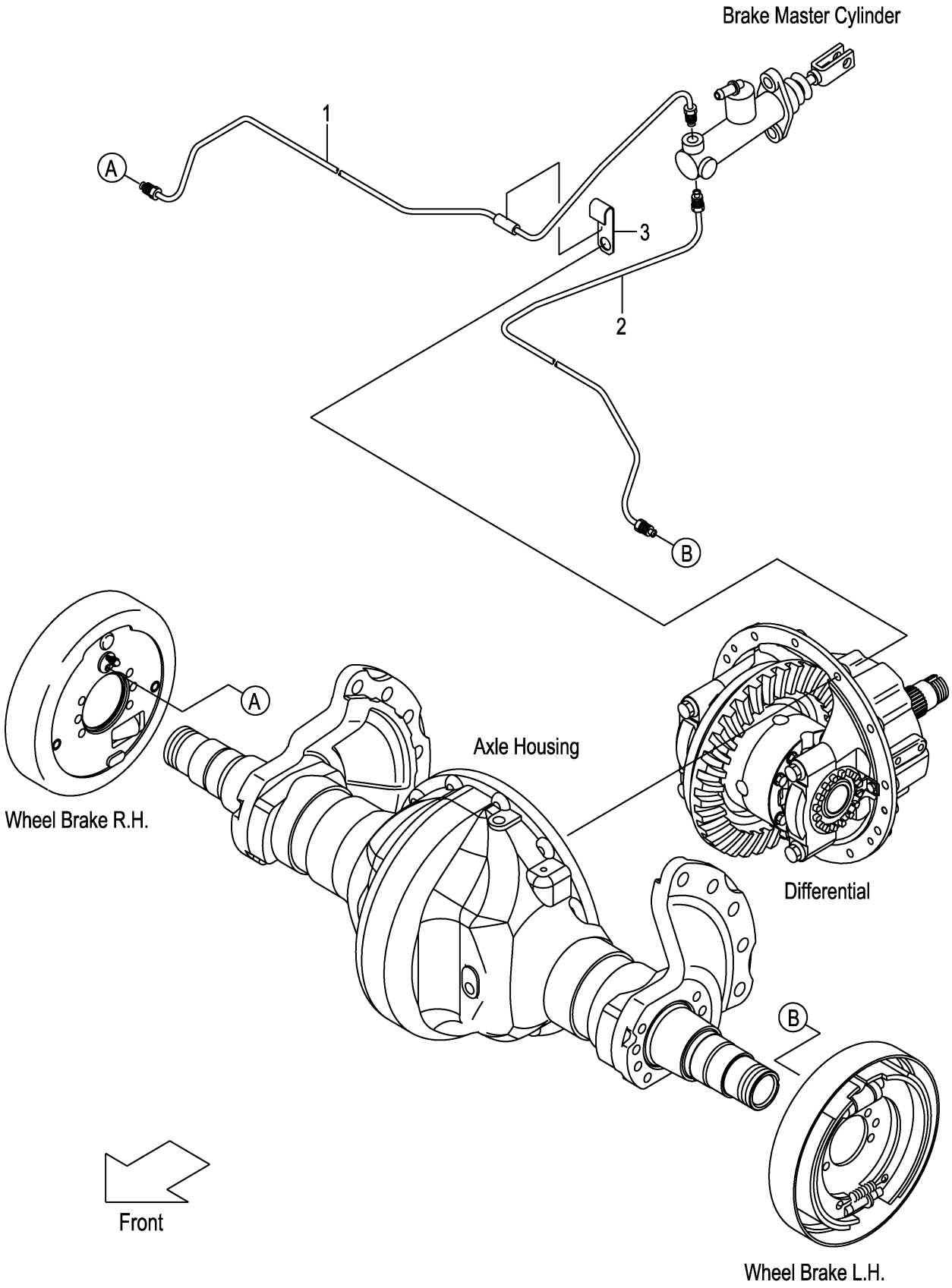

FIG.106

(F7Z354A0)

A:FD30T3Z

Item No	Part No.	Mark	Description	Req'd	Remarks : Serial No.
1	22N95-42302		PIPE,BRAKE,RH ﾊﾟｲﾌﾟ	1	
2	22N95-42402		PIPE,BRAKE,LH ﾊﾟｲﾌﾟ	1	
3	22N55-42171		CLIP,PIPE ｸﾘｯﾌﾟ	1	

FIG.107 FOOT PEDAL PARTS

(F7Z354E0) ﾌｯﾄﾍﾟﾀﾞﾙﾊﾟｰﾂ

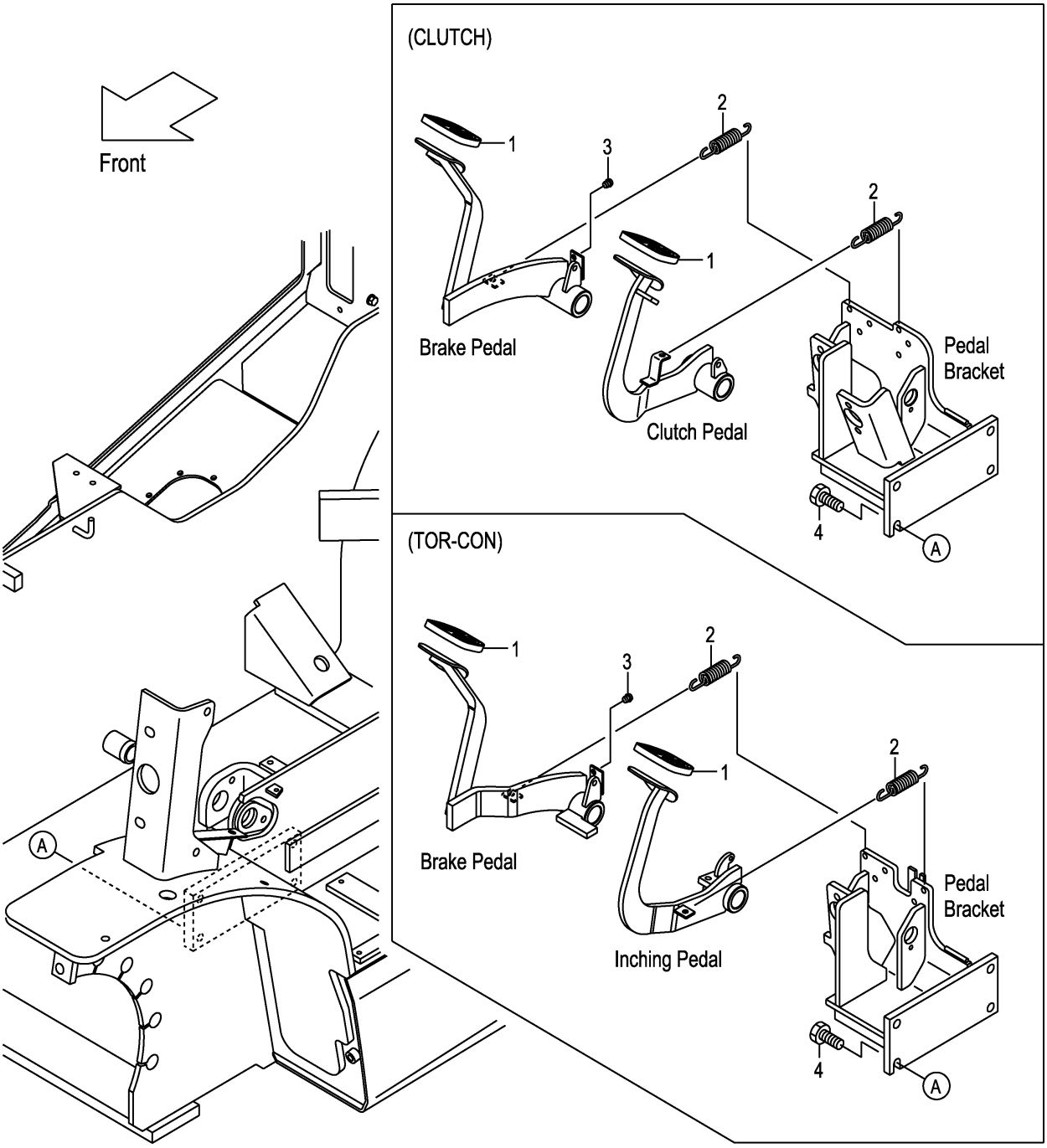

FIG.107

(F7Z354E0)

A:FD30C3Z FD30T3Z

Item No	Part No.	Mark	Description		Req'd	Remarks : Serial No.
1	239A5-42301		COVER,HEAD	ｶﾊﾞｰ	2	
2	24235-42091		SPRING	ｽﾌﾟﾘﾝｸﾞ	2	
3	23235-40091		RUBBER	ﾗﾊﾞｰ	1	
4	01184-12030		BOLT	ﾎﾞﾙﾄ	4	

FIG.108 CLUTCH MASTER CYLINDER (CLUTCH)

(F7Z354K0) クラッチマスタシリンダ

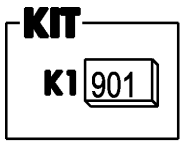

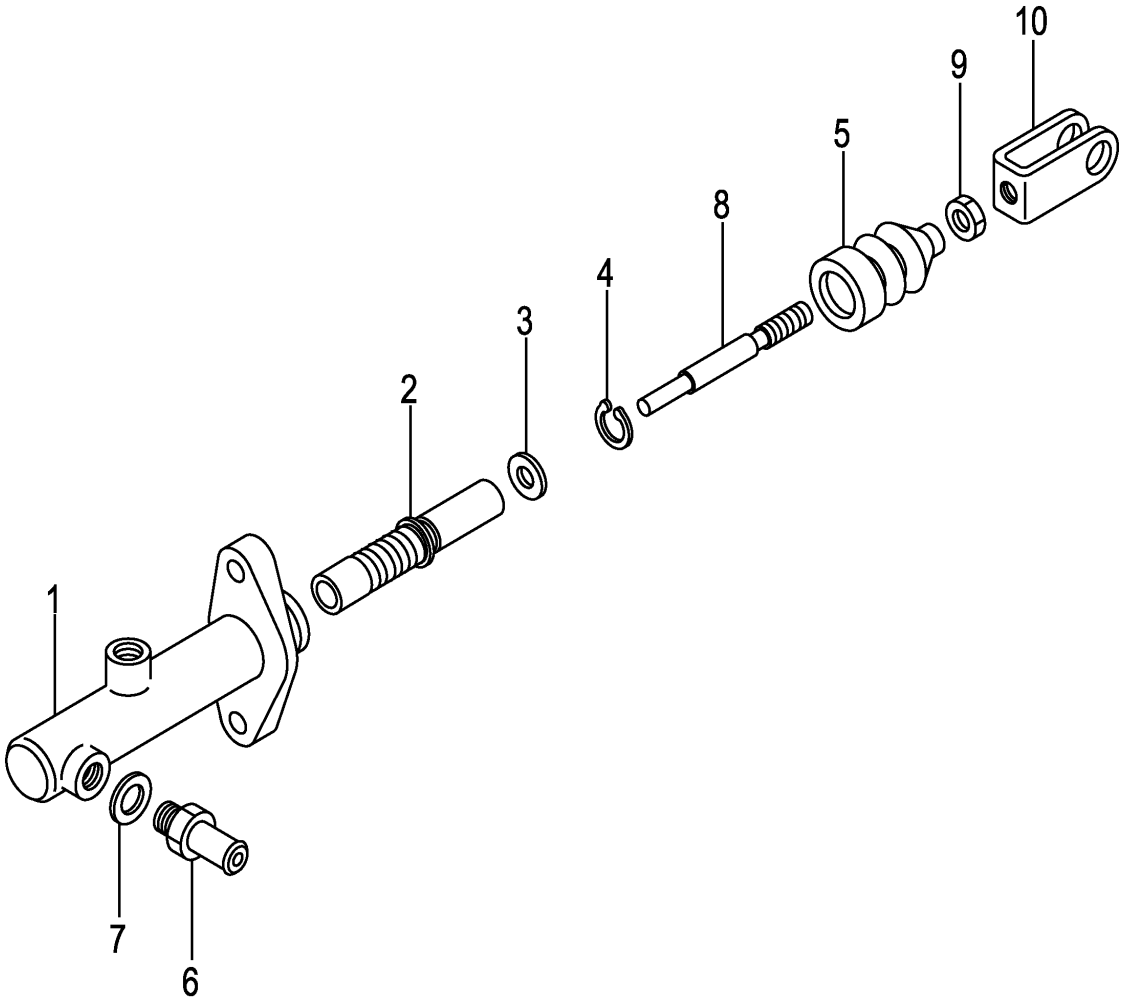

A:FD30C3Z

Item No	Part No.	Mark	Description		Req'd	Remarks : Serial No.
A1	239A5-40501		CYL-ASSY,CLUTCH-MASTER	クラッチマスタシリンダアッセン	1	INC.1-10
901	216G5-32201	K1	KIT,REPAIR	リペアキット	1	INC.2-5
1	NO PART NO.	#	BODY,CYL	ボディ	1	
2	NO PART NO.	#*	PISTON	ピストン	1	
3	NO PART NO.	#*	PLATE,PISTON-STOPPER	プレート	1	
4	NO PART NO.	#*	RING,SNAP	スナップリング	1	
5	NO PART NO.	#*	BOOT	ブーツ	1	
6	216G5-32331		UNION	ユニオン	1	
7	216G5-32341		GASKET	ガスケット	1	
8	NO PART NO.	#	ROD,PUSH	ロッド	1	
9	01402-00008		NUT	ナット	1	
10	25595-42452		CLEVIS	クレビス	1	

FIG.109 BRAKE MASTER CYLINDER

(F7Z354M0) ﾌﾞﾚｰｷﾏｽﾀｼﾘﾝﾀﾞ

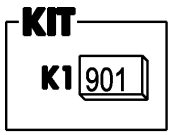

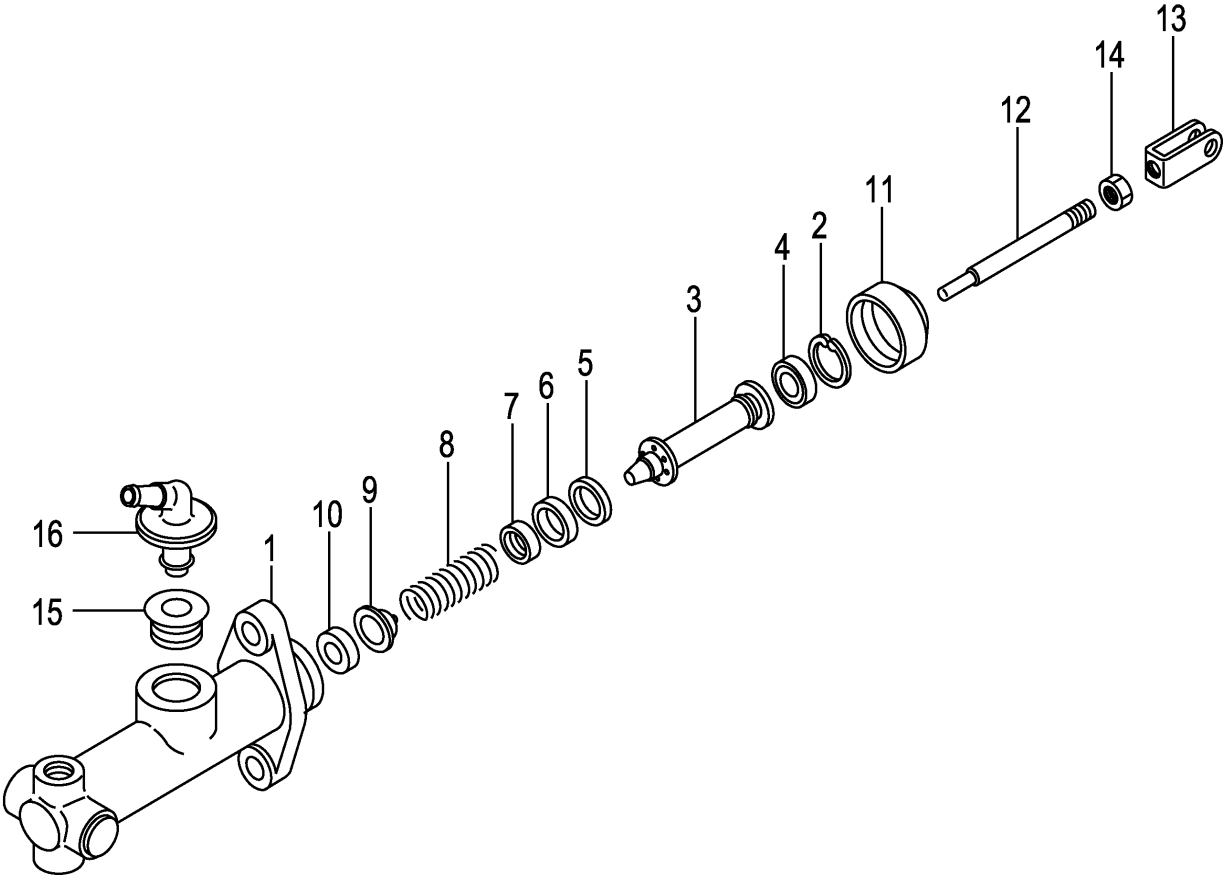

A:FD30C3Z FD30T3Z

Item No	Part No.	Mark	Description		Req'd	Remarks : Serial No.
A1	27045-40302		CYL-ASSY,BRAKE-MASTER	ﾌﾞﾚｰｷﾏｽﾀｼﾘﾝﾀﾞｱｯｾﾝ	1	INC.1-16
901	25595-42501	K1	KIT,REPAIR	ﾘﾍﾟｱｷｯﾄ	1	INC.2-11
1	NO PART NO.	#	BODY,CYL	ﾎﾞﾃﾞｨ	1	
2	NO PART NO.	#*	RING,SNAP	ｽﾅｯﾌﾟﾘﾝｸﾞ	1	
3	NO PART NO.	#*	PISTON	ﾋﾟｽﾄﾝ	1	
4	NO PART NO.	#*	CAP,SECONDARY	ｷｬｯﾌﾟ	1	
5	NO PART NO.	#*	SPACER	ｽﾍﾟｰｻ	1	
6	NO PART NO.	#*	CAP,PRIMARY	ｷｬｯﾌﾟ	1	
7	NO PART NO.	#*	SEAT,SPRING	ｼｰﾄ	1	
8	NO PART NO.	#*	SPRING	ｽﾌﾟﾘﾝｸﾞ	1	
9	NO PART NO.	#*	VALVE	ﾊﾞﾙﾌﾞ	1	
10	NO PART NO.	#*	SEAT,VALVE	ｼｰﾄ	1	
11	NO PART NO.	#*	BOOT	ﾌﾞｰﾂ	1	
A2	25595-42482		ROD-ASSY,PUSH	ﾌﾟｯｼｭﾛｯﾄﾞｱｯｾﾝ	1	INC.12-14
12	NO PART NO.	#	ROD,PUSH	ﾛｯﾄﾞ	1	
13	25595-42452		CLEVIS	ｸﾚﾋﾞｽ	1	
14	01402-00008		NUT	ﾅｯﾄ	1	
15	25595-42421		BUSHING	ﾌﾞｯｼﾝｸﾞ	1	
16	25595-42411		UNION,FILLER	ﾕﾆｵﾝ	1	

FIG.110 CLUTCH RELEASE CYLINDER (CLUTCH)

(F7Z354P0) クラッチリリースシリンダ

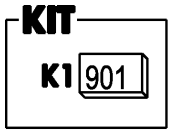

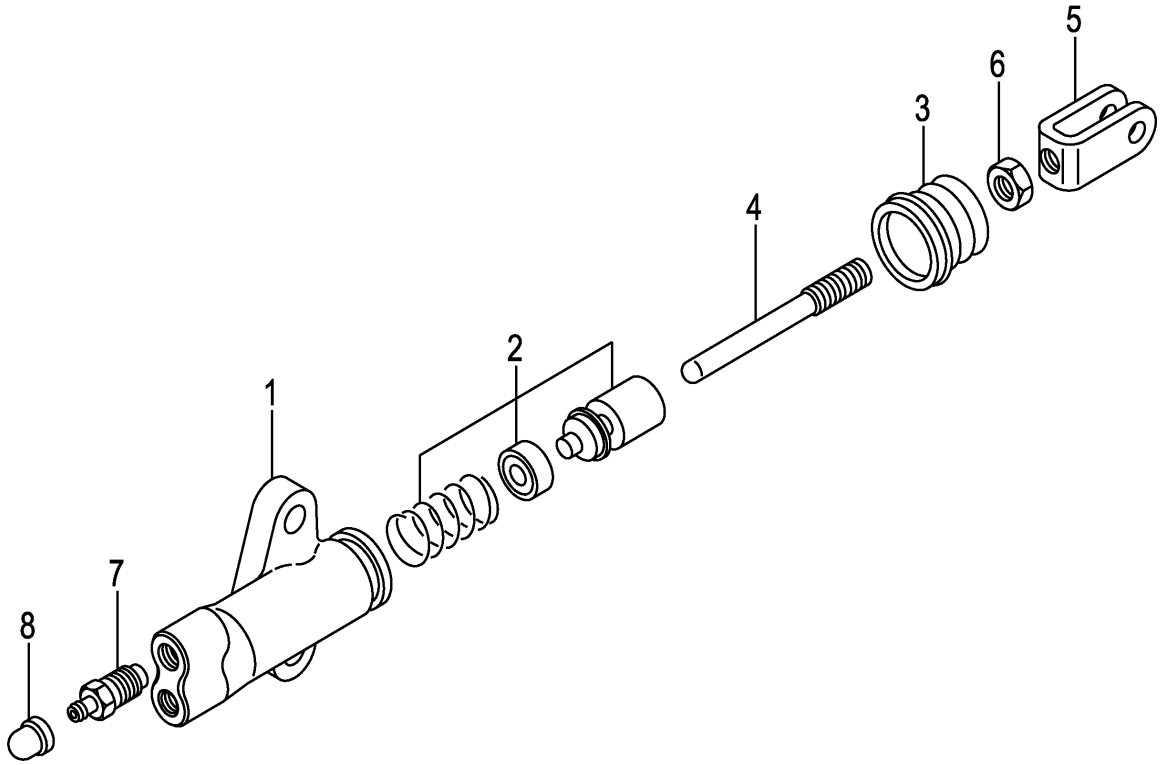

A:FD30C3Z

Item No	Part No.	Mark	Description		Req'd	Remarks : Serial No.
A1	214A5-32312		CYL-ASSY,CLUTCH-RELEASE	クラッチリリースシリンダアッセン	1	INC.1-8
901	214A5-33012	K1	KIT,REPAIR	リペアキット	1	INC.2,3
1	NO PART NO.	#	BODY,CYL	ボディ	1	
2	NO PART NO.	#*	PISTON	ピストン	1	
3	NO PART NO.	#*	BOOT	ブーツ	1	
A2	214A5-33052		ROD-ASSY,PUSH	プッシュロッドアッセン	1	INC.4-6
4	214A5-33062		ROD,PUSH	ロッド	1	
5	25595-42452		CLEVIS	クレビス	1	
6	01402-00008		NUT	ナット	1	
7	214A5-33031		VALVE,BLEEDER	バルブ	1	
8	214A5-33041		CAP,BLEEDER	キャップ	1	

FIG.111 BRAKE LEVER

(F7Z35510) ﾌﾞﾚｰｷﾚﾊﾞｰ

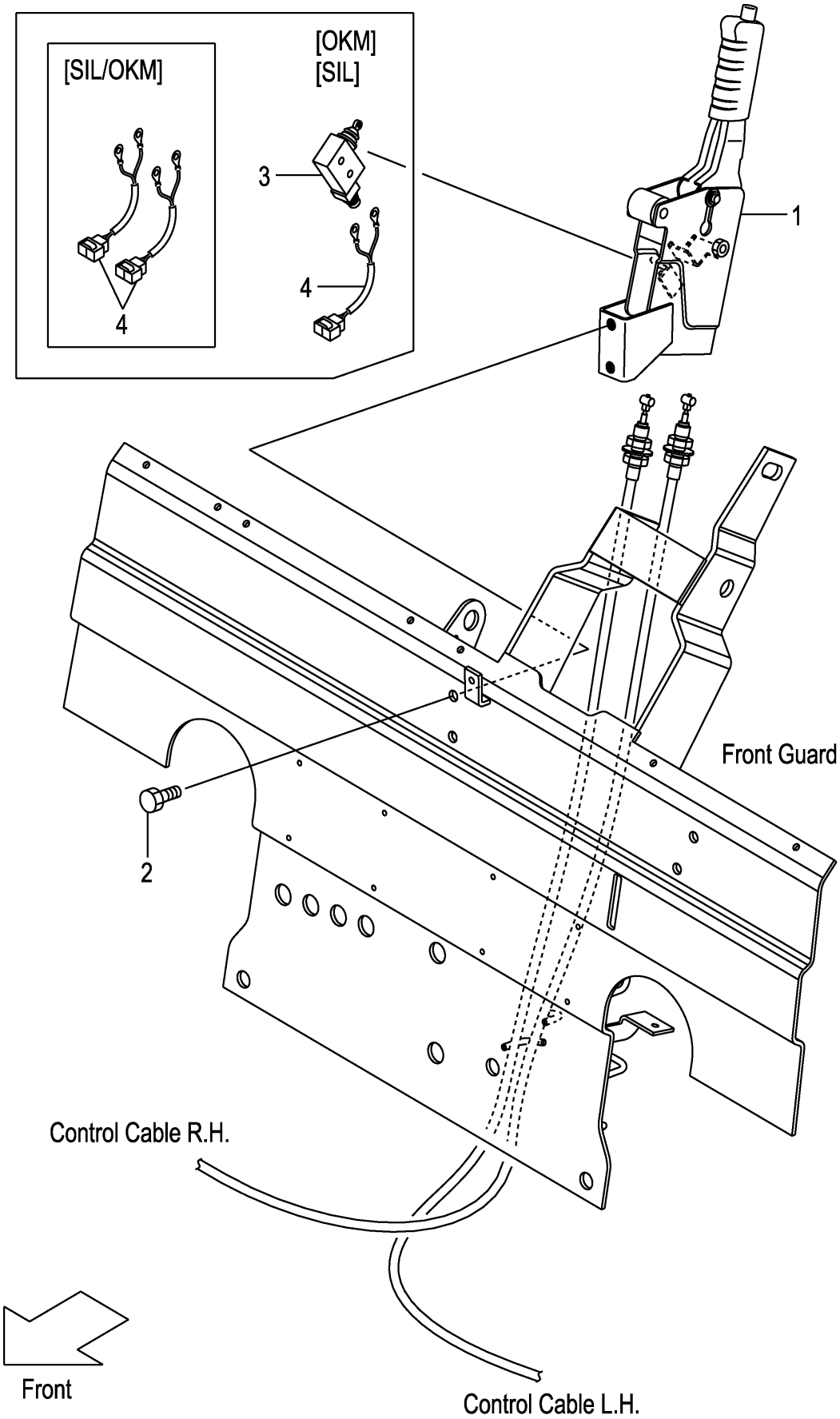

A:FD30C3Z FD30T3Z

Item No	Part No.	Mark	Description		Req'd	Remarks : Serial No.
1	22N55-50101		LEVER,PARKING-BRAKE	ﾚﾊﾞｰ	1	
2	01184-10050		BOLT	ﾎﾞﾙﾄ	2	1-109
-	01184-10025		BOLT	ﾎﾞﾙﾄ	2	110-
3	27912-62441		SWITCH,MICRO	ｽｲｯﾁ	1	[OKM][SIL][SIL/OKM]
4	535H3-82261		WIRE-HARNESS,SWITCH	ﾜｲﾔﾊｰﾈｽ	1	1-109
						[OKM][SIL]
-	278M2-42061		WIRE-HARNESS,SWITCH	ﾜｲﾔﾊｰﾈｽ	1	110-
						[OKM][SIL]
-	278M2-42061		WIRE-HARNESS,SWITCH	ﾜｲﾔﾊｰﾈｽ	2	[SIL/OKM]

FIG.112 FRAME

(F7Z36110) フレーム

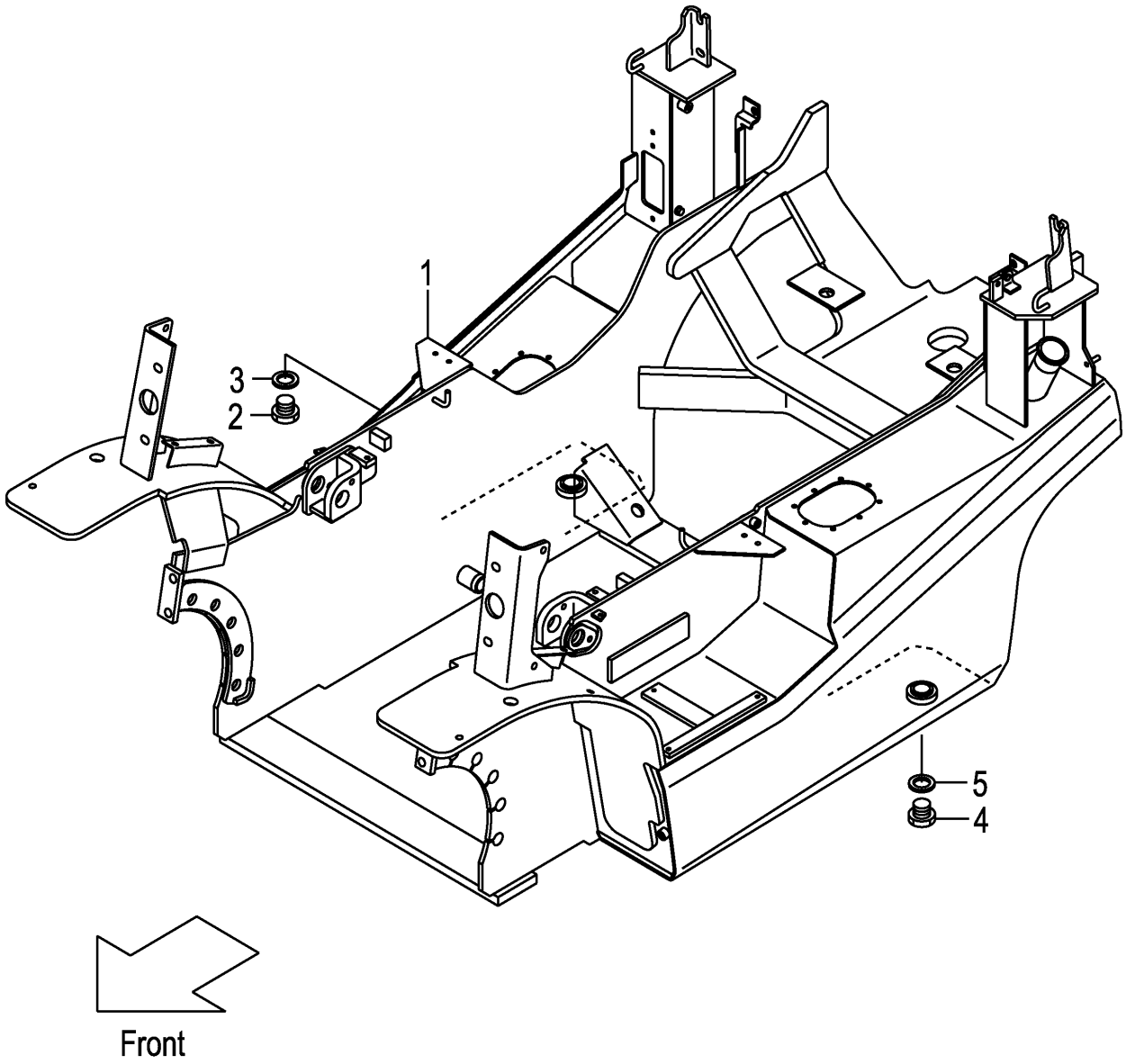

FIG.112

(F7Z36110)

A:FD30C3Z FD30T3Z

Item No	Part No.	Mark	Description		Req'd	Remarks : Serial No.
1	NO PART NO.	#	FRAME	ﾌﾚｰﾑ	1	
2	21237-52051		PLUG,DRAIN	ﾌﾟﾗｸﾞ	1	
3	21237-52062		PACKING	ﾊﾟｯｷﾝｸﾞ	1	
4	21237-52051		PLUG,DRAIN	ﾌﾟﾗｸﾞ	1	
5	21237-52062		PACKING	ﾊﾟｯｷﾝｸﾞ	1	

FIG.113 OIL TANK

(F7Z36120) オイルタンク

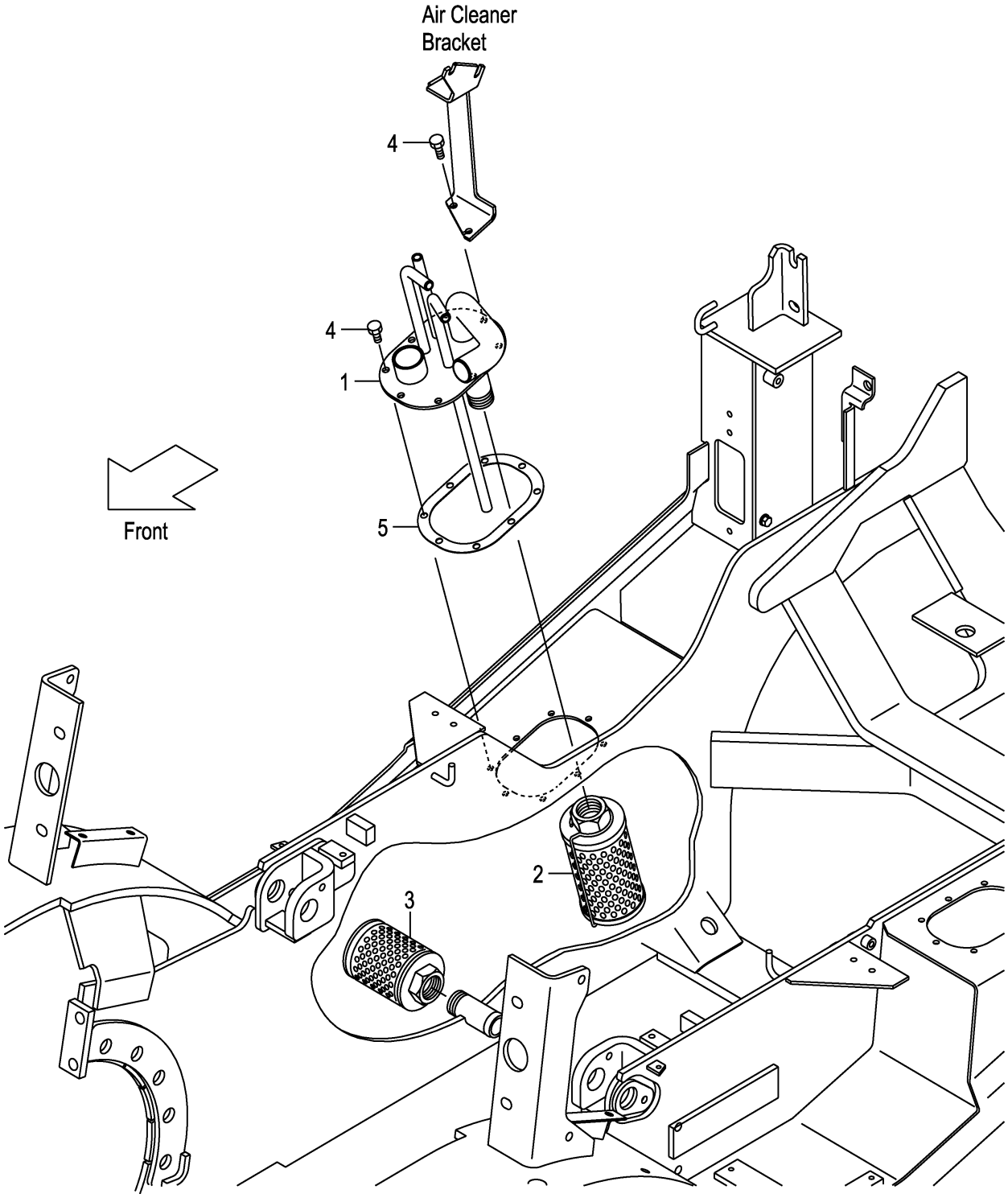

FIG.113
(F7Z36120)

A:FD30C3Z FD30T3Z

Item No	Part No.	Mark	Description		Req'd	Remarks : Serial No.
1	22N57-52302		PIPE,RETURN	ﾊﾟｲﾌﾟ	1	
2	271A7-52301		FILTER,RETURN	ﾌｨﾙﾀ	1	
3	216G7-52051		FILTER,SUCTION	ﾌｨﾙﾀ	1	
4	229F2-22151		BOLT	ﾎﾞﾙﾄ	8	
5	22N52-22201		PACKING	ﾊﾟｯｷﾝｸﾞ	1	

FIG.114 OIL CAP & LEVEL

(F7Z36130) オイルキャップ&レベル

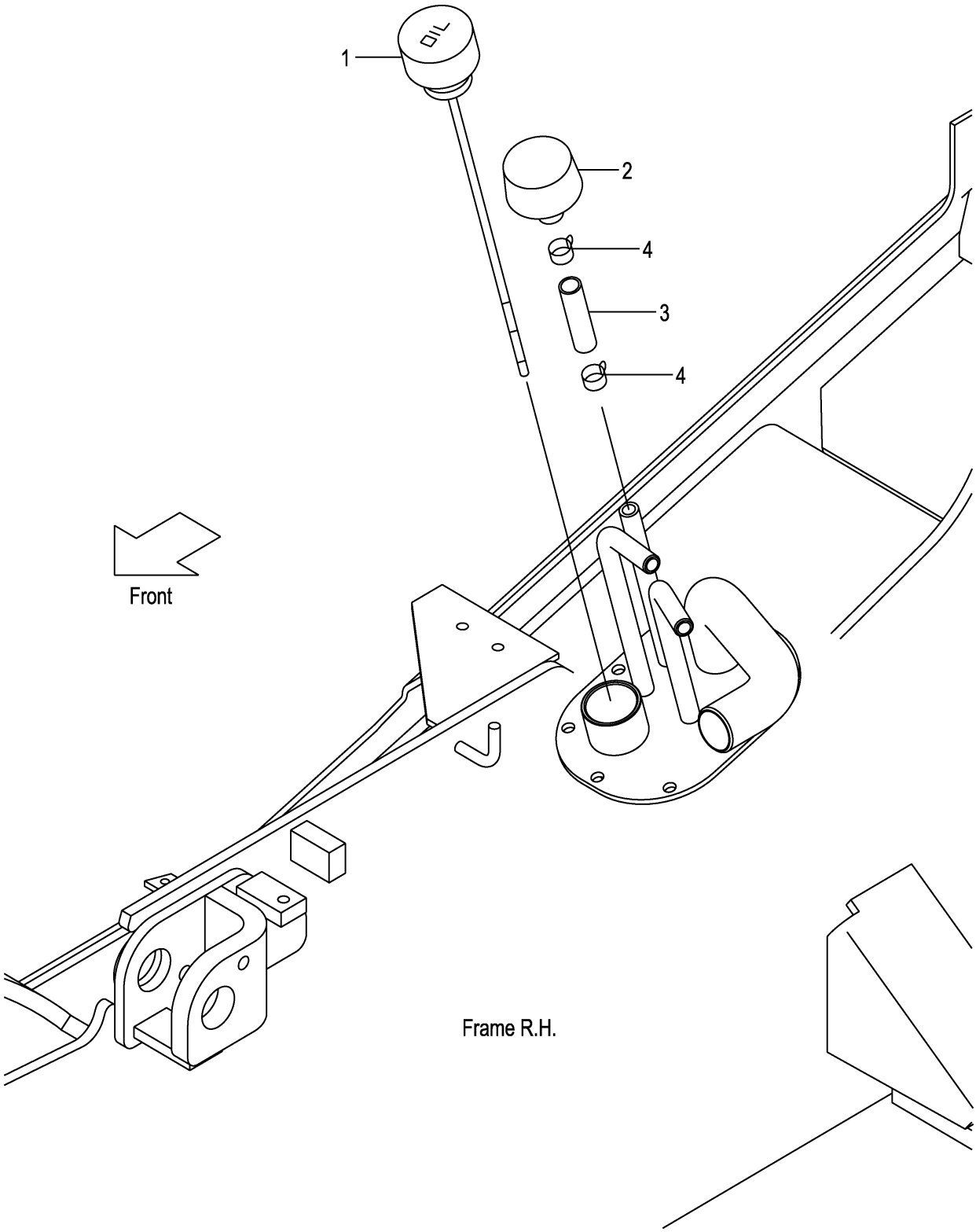

A:FD30C3Z FD30T3Z

Item No	Part No.	Mark	Description		Req'd	Remarks : Serial No.
1	22N57-52101		CAP,OIL	ｷｬｯﾌﾟ	1	1-109
-	22N57-52102		CAP,OIL	ｷｬｯﾌﾟ	1	110-
2	216G7-52201		CAP,BREATHER	ｷｬｯﾌﾟ	1	
3	04710-04005		HOSE	ﾎｰｽ	1	
4	04914-00019		CLIP	ｸﾘｯﾌﾟ	2	

FIG.115 FUEL TANK

(F7Z36150) フューエルタンク

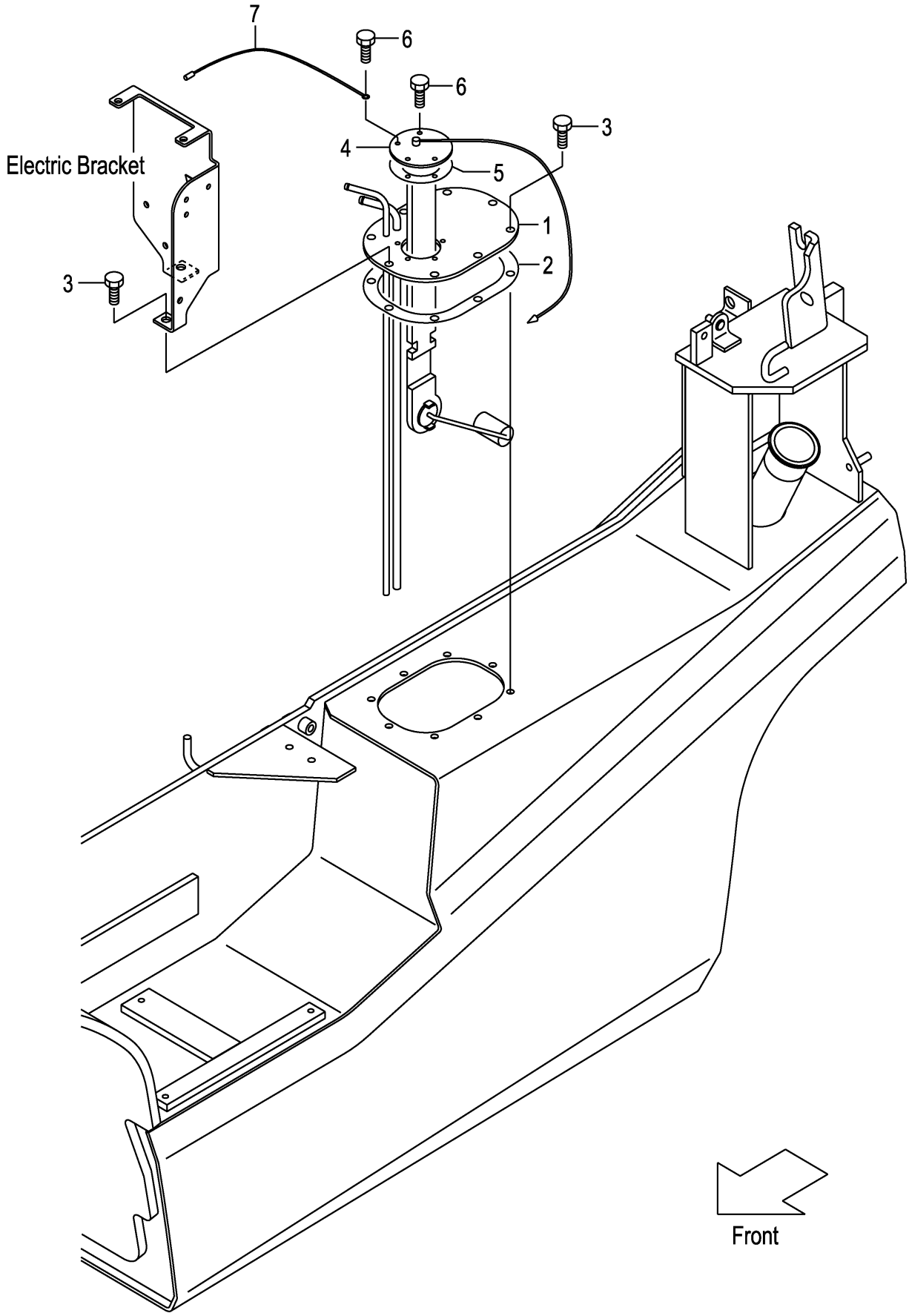

FIG.115

(F7Z36150)

A:FD30C3Z FD30T3Z

Item No	Part No.	Mark	Description		Req'd	Remarks : Serial No.
1	22N52-22101		PLATE,FUEL-TOP	ﾌﾟﾚｰﾄ	1	
2	22N52-22201		PACKING	ﾊﾟｯｷﾝｸﾞ	1	
3	229F2-22151		BOLT	ﾎﾞﾙﾄ	8	
4	222A2-22061		GAUGE,FUEL	ｹﾞｰｼﾞ	1	
5	229F2-22071		GASKET	ｶﾞｽｹｯﾄ	1	
6	229F2-22171		BOLT	ﾎﾞﾙﾄ	5	
7	25592-42121		WIRE	ﾜｲﾔ	1	

FIG.116 BALANCE WEIGHT

(F7Z36310) ﾊﾞﾗﾝｽｳｴｲﾄ

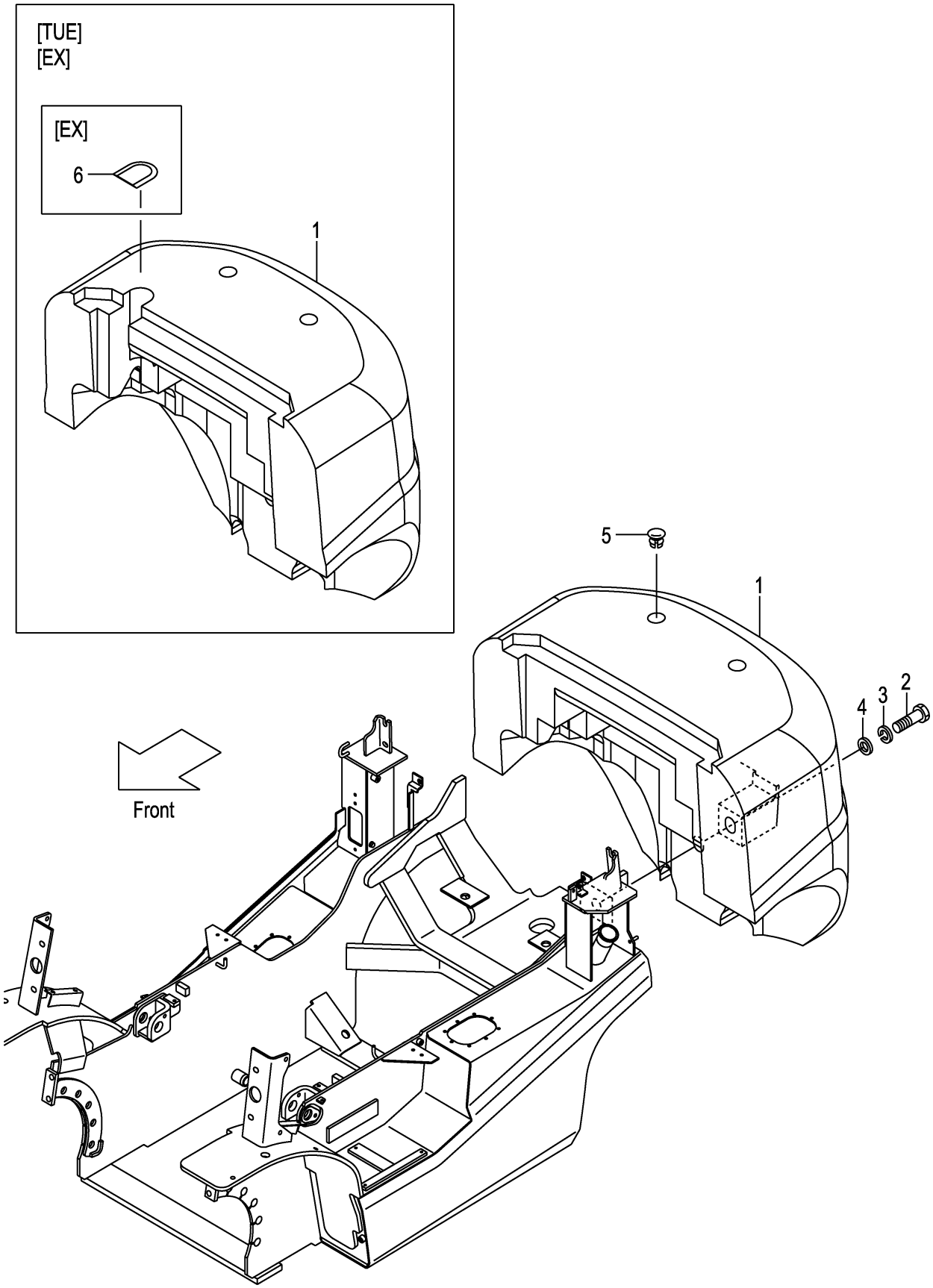

FIG.116
(F7Z36310)

A:FD30C3Z FD30T3Z

Item No	Part No.	Mark	Description		Req'd	Remarks : Serial No.
1	NO PART NO.	#	WEIGHT,BALANCE,3.0	ｳｴｲﾄ	1	
2	01110-36200		BOLT	ﾎﾞﾙﾄ	1	
3	02010-00036		WASHER	ﾜｯｼｬ	1	
4	25786-32031		WASHER	ﾜｯｼｬ	1	
5	22N56-32041		CAP	ｷｬｯﾌﾟ	2	
6	516G2-72051		COVER	ｶﾊﾞｰ	1	[EX]

FIG.117 BALANCE WEIGHT [HC]

(F7Z36320) ﾊﾞﾗﾝｽｳｴｲﾄ

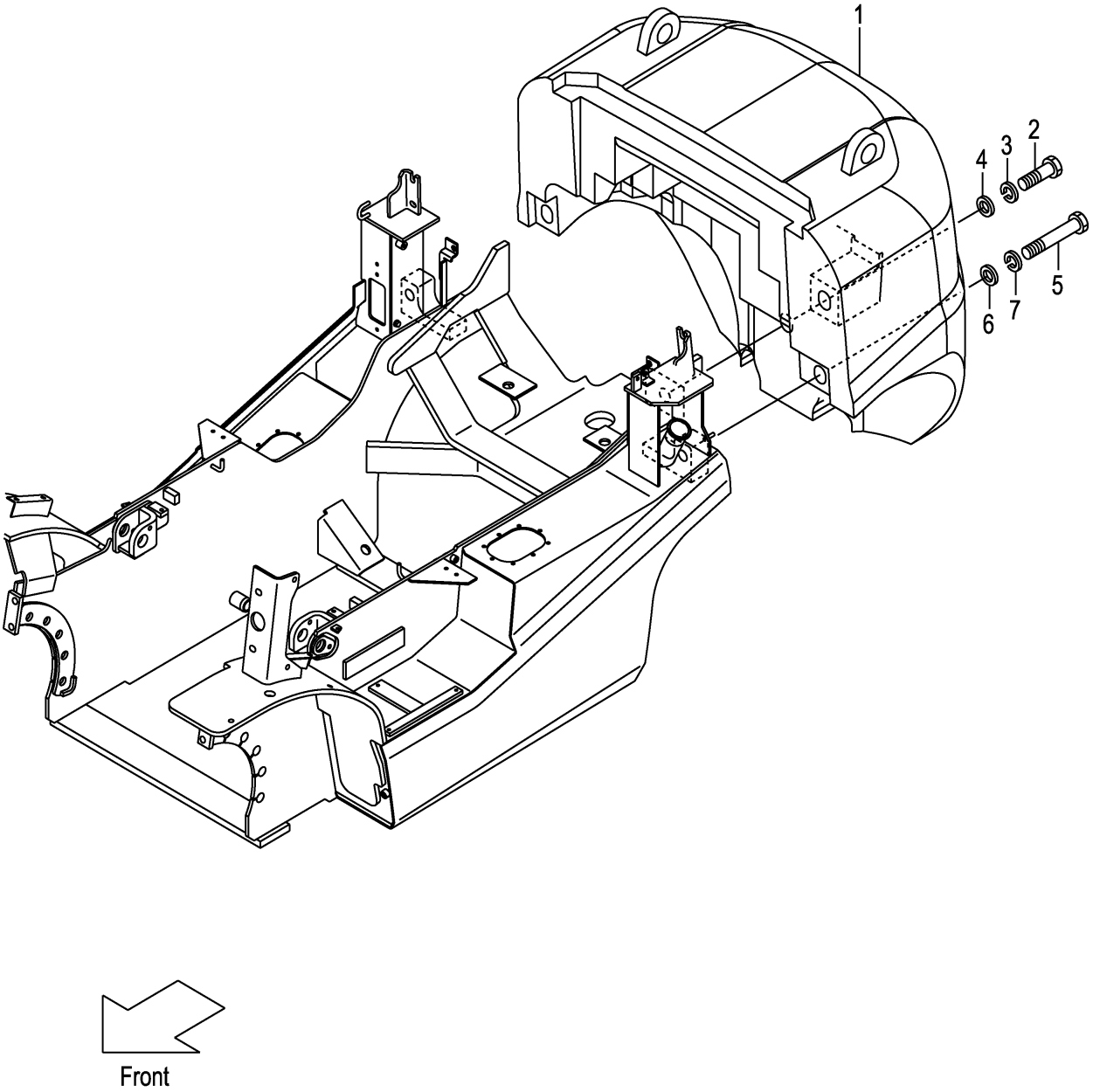

A:FD30C3Z FD30T3Z

Item No	Part No.	Mark	Description		Req'd	Remarks : Serial No.
1	NO PART NO.	#	WEIGHT,BALANCE,3.0	ｳｴｲﾄ	1	[HC]
2	01110-36200		BOLT	ﾎﾞﾙﾄ	1	[HC]
3	02010-00036		WASHER	ﾜｯｼｬ	1	[HC]
4	25786-32031		WASHER	ﾜｯｼｬ	1	[HC]
5	01113-30370		BOLT	ﾎﾞﾙﾄ	2	[HC]
6	225R6-32001		WASHER	ﾜｯｼｬ	2	[HC]
7	02010-00030		WASHER	ﾜｯｼｬ	2	[HC]
8	225R9-12101	+	DECAL,HOOK-CAUTION	ﾃﾞｶﾙ	1	[HC]

FIG.118 FRONT GUARD

(F7Z36410) ﾌﾛﾝﾄｶﾞｰﾄﾞ

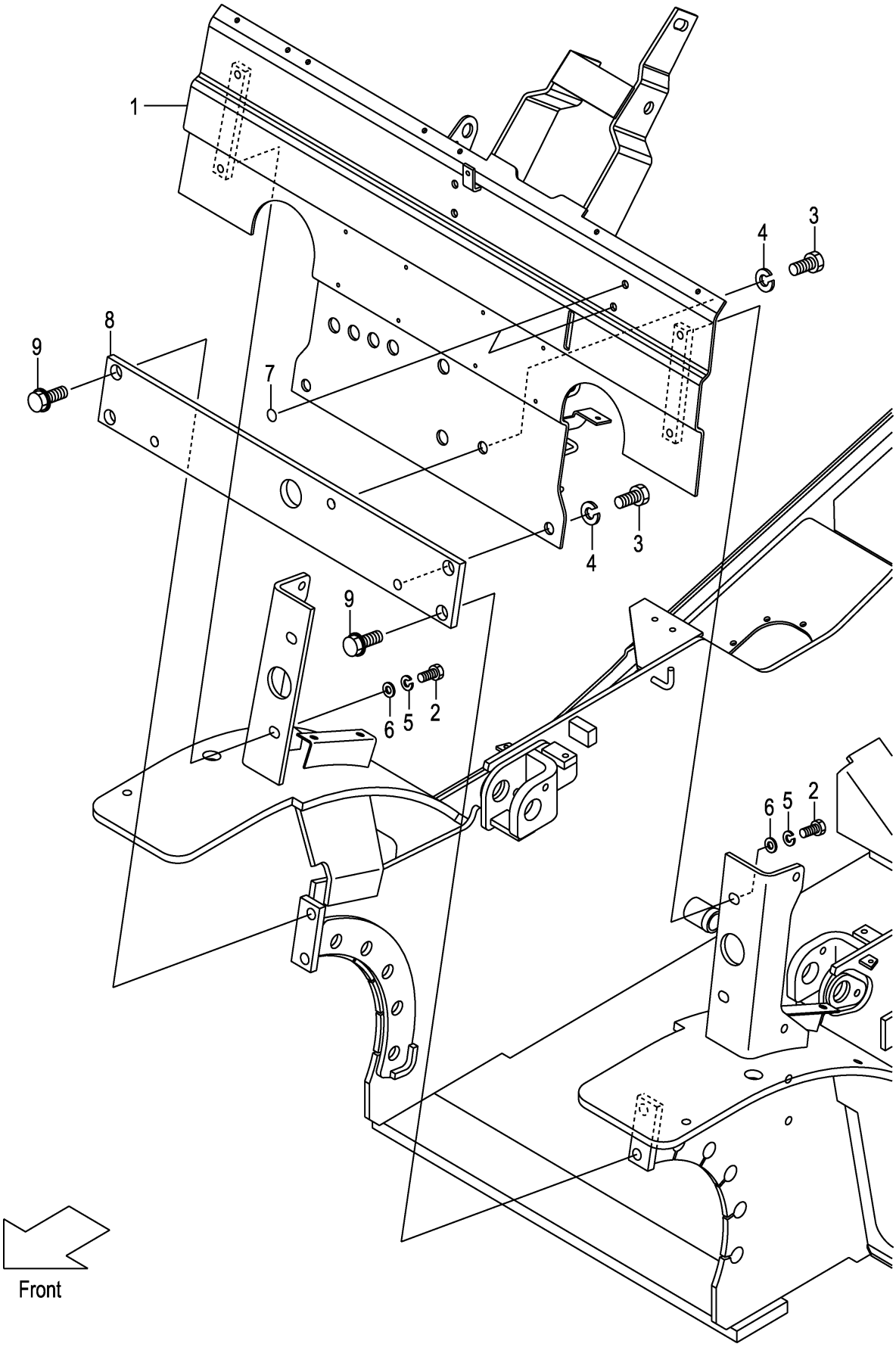

FIG.118
(F7Z36410)

A:FD30C3Z FD30T3Z

Item No	Part No.	Mark	Description		Req'd	Remarks : Serial No.
1	22N56-40101		GUARD,FRONT	ｶﾞｰﾄﾞ	1	
2	01186-12025		BOLT	ﾎﾞﾙﾄ	4	
-	01109-12025		BOLT,STAINLESS	ﾎﾞﾙﾄ	4	[FC]
3	01100-16020		BOLT	ﾎﾞﾙﾄ	3	
4	02010-00016		WASHER	ﾜｯｼｬ	3	
5	02013-00012		WASHER	ﾜｯｼｬ	4	[FC]
6	02001-00012		WASHER	ﾜｯｼｬ	4	[FC]
7	22N55-13181		SEAL,PANEL-COVER	ｼｰﾙ	2	
8	22N56-42041		PLATE,FRONT	ﾌﾟﾚｰﾄ	1	
9	216G6-43561		BOLT,FLANGE	ﾎﾞﾙﾄ	4	

FIG.119 BONNET

(F7Z36420) ﾎﾞﾝﾈｯﾄ

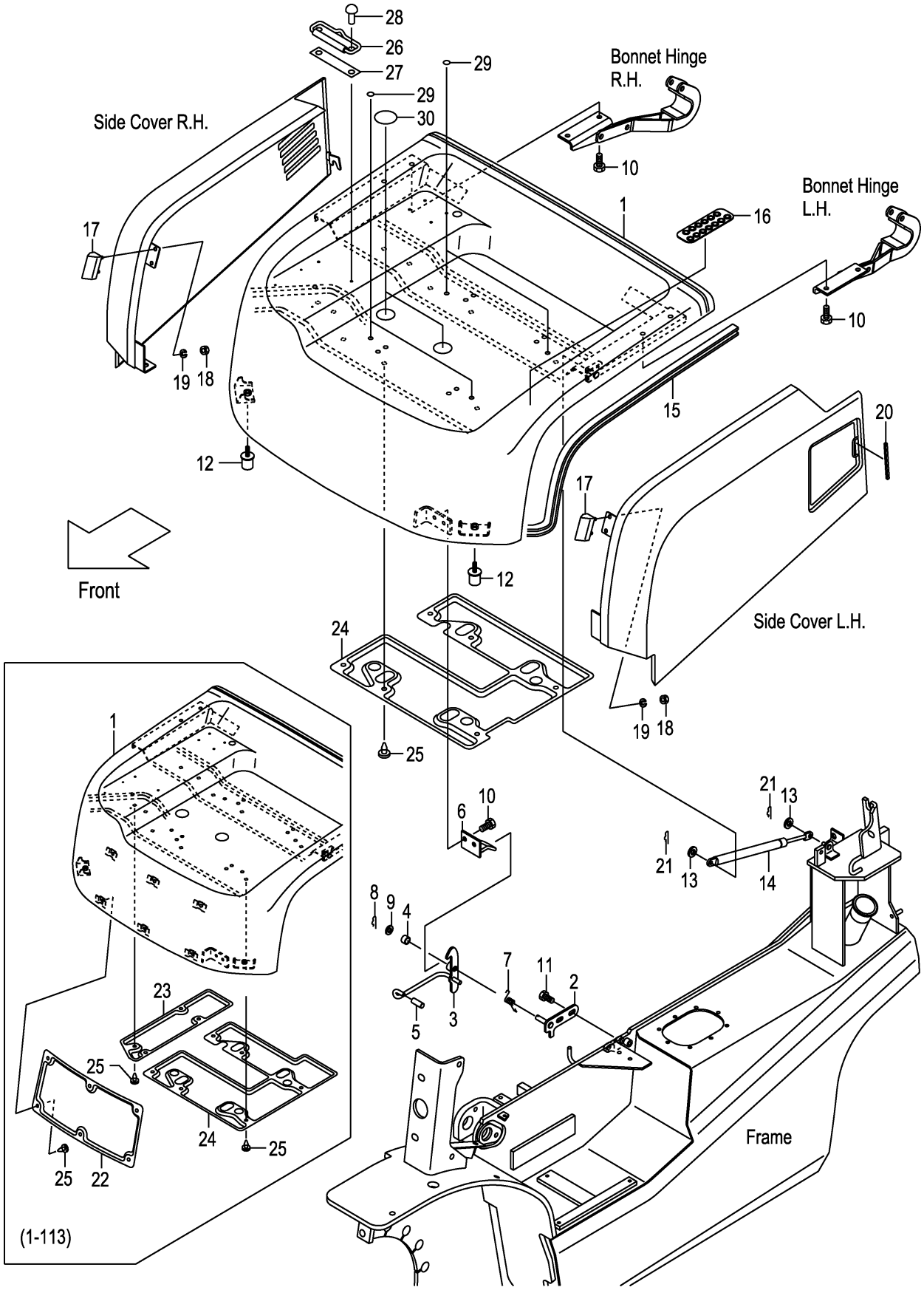

A:FD30C3Z FD30T3Z

Item No	Part No.	Mark	Description		Req'd	Remarks : Serial No.
1	22N56-40202		BONNET	ﾎﾞﾝﾈｯﾄ	1	1-113
-	22N56-40203		BONNET	ﾎﾞﾝﾈｯﾄ	1	114-
-	52N55-30401		BONNET	ﾎﾞﾝﾈｯﾄ	1	1-113 [SCB001][SCBCR]
-	52N55-30402		BONNET	ﾎﾞﾝﾈｯﾄ	1	114- [SCB001][SCBCR]
-	52N59-20411		BONNET	ﾎﾞﾝﾈｯﾄ	1	1-113 [TOB]
-	52N59-20412		BONNET	ﾎﾞﾝﾈｯﾄ	1	114- [TOB]
A1	243C6-40021		CATCH-ASSY,BONNET	ﾎﾞﾝﾈｯﾄｷｬｯﾁｱｯｾﾝ	1	INC.2-9
2	NO PART NO.	#	BRACKET,BONNET-CATCH	ﾌﾞﾗｹｯﾄ	1	
3	NO PART NO.	#	LATCH	ﾗｯﾁ	1	
4	23655-22101		BUSHING	ﾌﾞｯｼﾝｸﾞ	1	
5	216G6-52291		CAP	ｷｬｯﾌﾟ	1	
6	216G6-42451		HOOK	ﾌｯｸ	1	
7	216G6-42481		SPRING	ｽﾌﾟﾘﾝｸﾞ	1	
8	216H5-42141		PIN,SNAP	ﾋﾟﾝ	1	
9	02000-00010		WASHER	ﾜｯｼｬ	1	
10	01183-08016		BOLT	ﾎﾞﾙﾄ	6	
11	01185-08016		BOLT	ﾎﾞﾙﾄ	2	
12	22N56-43051		RUBBER,STOPPER	ﾗﾊﾞｰ	2	
13	02000-00008		WASHER	ﾜｯｼｬ	2	
14	22N56-43041		SPRING,GAS	ｽﾌﾟﾘﾝｸﾞ	1	
15	22N56-40361		RUBBER,SEAL,BONNET	ﾗﾊﾞｰ	1	
16	22N56-43221		RUBBER	ﾗﾊﾞｰ	1	
17	22N56-43281		STOPPER,BONNET	ｽﾄｯﾊﾟ	2	
18	01400-00006		NUT	ﾅｯﾄ	4	
19	02010-00006		WASHER	ﾜｯｼｬ	4	
20	22N56-43271		RUBBER	ﾗﾊﾞｰ	1	
21	216H3-92171		PIN,SNAP	ﾋﾟﾝ	2	
22	22N56-40451		INSULATOR,A	ｲﾝｼｭﾚｰﾀ	1	1-113
23	22N56-40461		INSULATOR,B	ｲﾝｼｭﾚｰﾀ	1	1-113
24	22N56-40471		INSULATOR,C	ｲﾝｼｭﾚｰﾀ	1	
25	216G6-42541		CLIP	ｸﾘｯﾌﾟ	16	1-113
-	216G6-42541		CLIP	ｸﾘｯﾌﾟ	6	114-
26	25599-32001		BINDER	ﾊﾞｲﾝﾀﾞ	1	
27	25599-32021		SHEET,BINDER	ｼｰﾄ	1	
28	22256-42001		RIVET	ﾘﾍﾞｯﾄ	2	
29	22N56-43531		SEAL,PANEL-COVER	ｼｰﾙ	6	
30	22N56-43541		SEAT,BONNET	ｼｰﾄ	2	

FIG.120 RADIATOR COVER

(F7Z36430) ﾗｼﾞｴｰﾀｶﾊﾞｰ

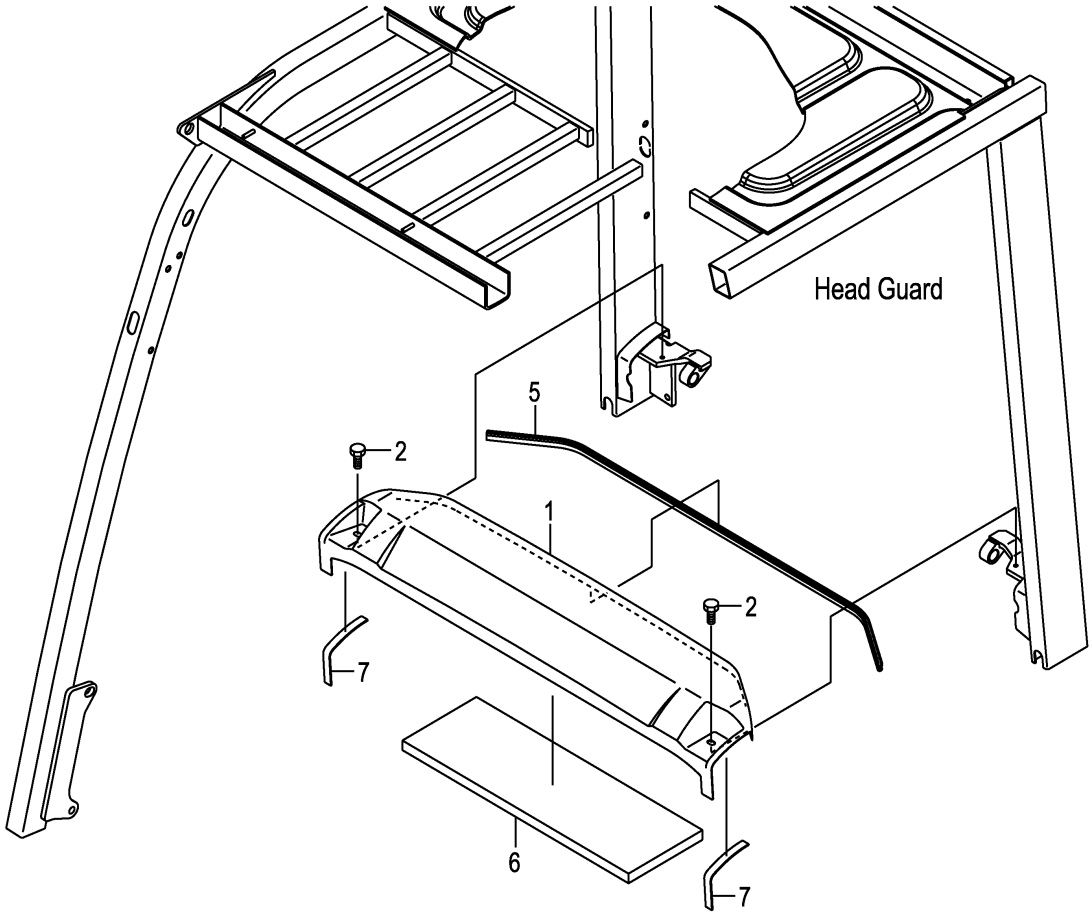

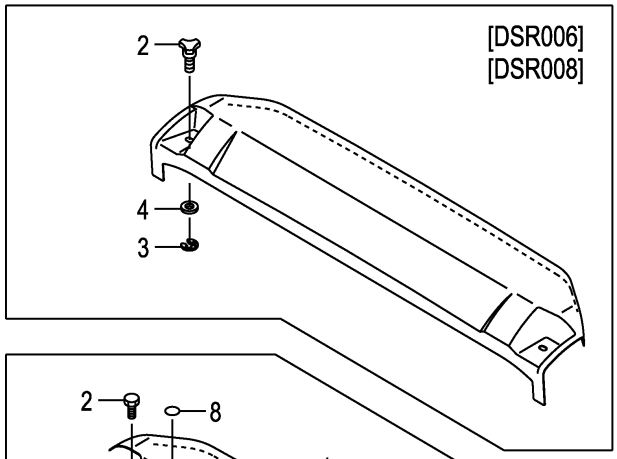

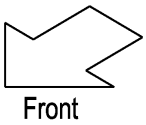

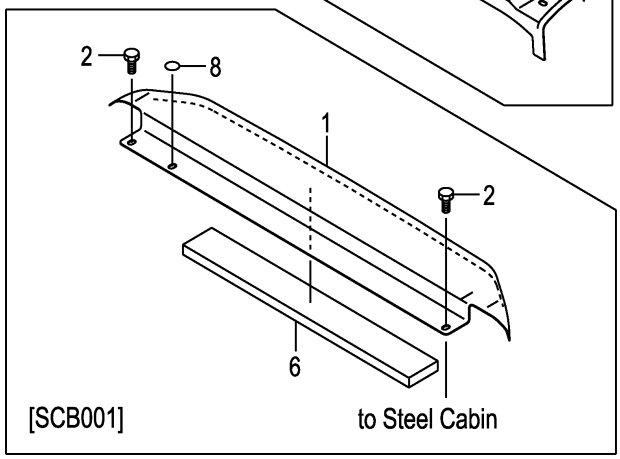

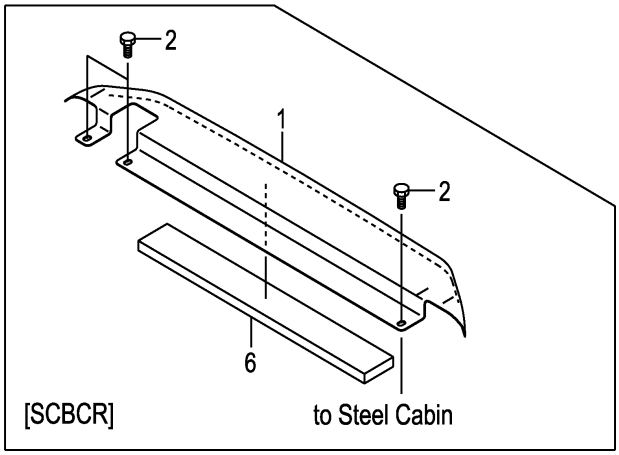

FIG.120
(F7Z36430)

A:FD30C3Z FD30T3Z

Item No	Part No.	Mark	Description		Req'd	Remarks : Serial No.
1	22N56-40302		COVER,RADIATOR	ｶﾊﾞｰ	1	
-	52N55-40211		COVER,RADIATOR	ｶﾊﾞｰ	1	[AW061]
-	52N55-30451		COVER,RADIATOR	ｶﾊﾞｰ	1	[SCB001]
-	52N57-60451		COVER,RADIATOR	ｶﾊﾞｰ	1	[SCBCR]
2	01181-08016		BOLT	ﾎﾞﾙﾄ	2	
-	01181-08016		BOLT	ﾎﾞﾙﾄ	3	[SCBCR]
-	222A6-42451		BOLT,KNOB	ﾎﾞﾙﾄ	2	[DSR006][DSR008]
3	222A6-42461		E-RING	Eﾘﾝｸﾞ	2	[DSR006][DSR008]
4	02000-00008		WASHER	ﾜｯｼｬ	2	[DSR006][DSR008]
5	22N56-40371		SEAL,RUBBER	ｼｰﾙ	1	
6	22N56-40401		RUBBER,RAD-COVER	ﾗﾊﾞｰ	1	
-	52N55-32171		RUBBER,RAD-COVER	ﾗﾊﾞｰ	1	[SCB001][SCBCR]
7	234A6-43121		RUBBER	ﾗﾊﾞｰ	2	(WITHOUT SCB001,SCBCR)
8	22N56-43531		SEAL,PANEL-COVER	ｼｰﾙ	1	[SCB001]

FIG.121 BONNET HINGE

(F7Z36440) ﾎﾞﾝﾈｯﾄﾋﾝｼﾞ

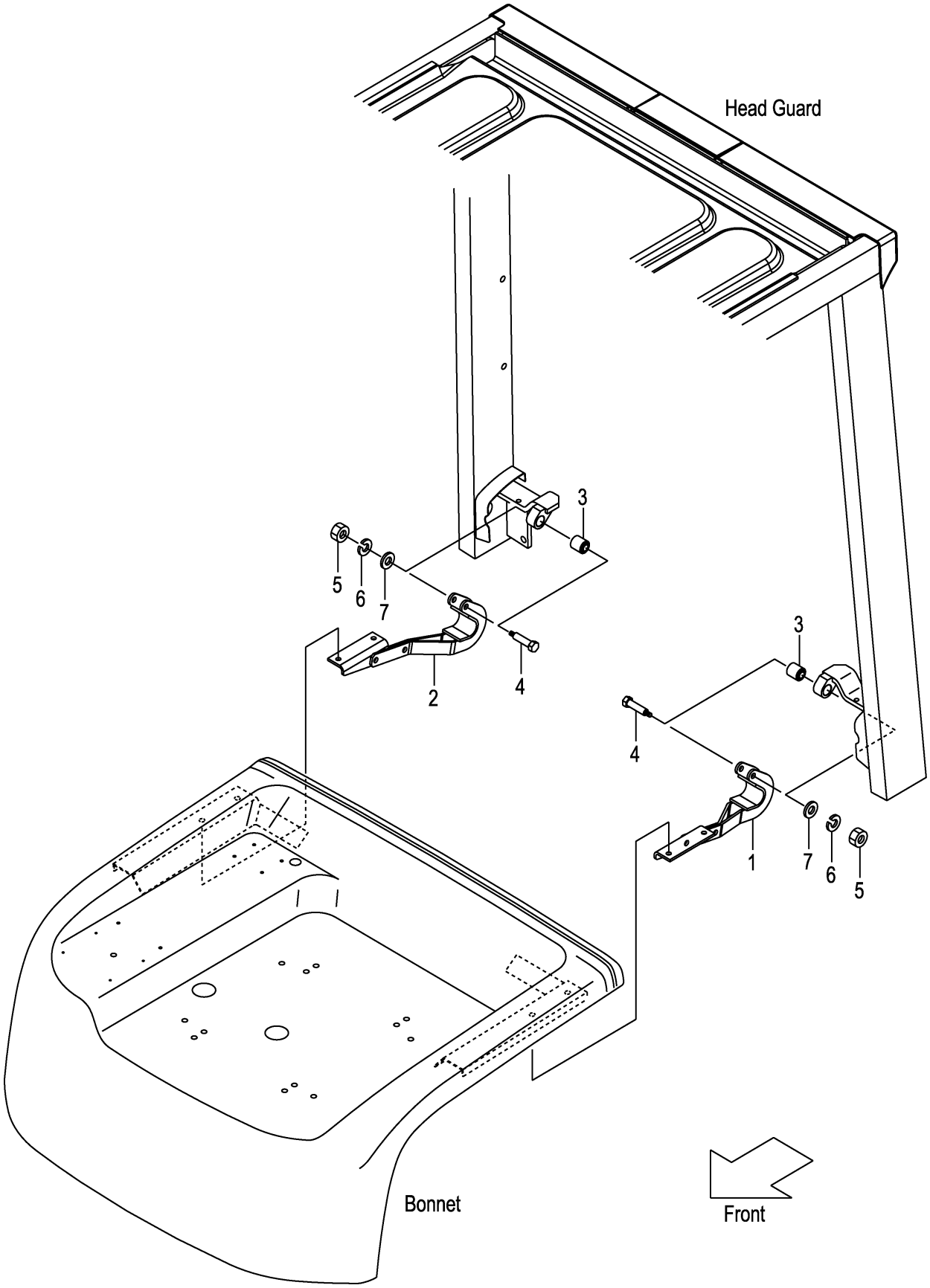

FIG.121

(F7Z36440)

A:FD30C3Z FD30T3Z

Item No	Part No.	Mark	Description		Req'd	Remarks : Serial No.
1	22N56-42602		HINGE,LH	ﾋﾝｼﾞ	1	
2	22N56-42612		HINGE,RH	ﾋﾝｼﾞ	1	
3	216G6-42921		BUSHING	ﾌﾞｯｼﾝｸﾞ	2	
4	216G6-42931		BOLT	ﾎﾞﾙﾄ	2	
5	01400-00006		NUT	ﾅｯﾄ	2	
6	02010-00006		WASHER	ﾜｯｼｬ	2	
7	02000-00006		WASHER	ﾜｯｼｬ	2	

FIG.122 FLOOR BOARD

(F7Z36450) フロアボード

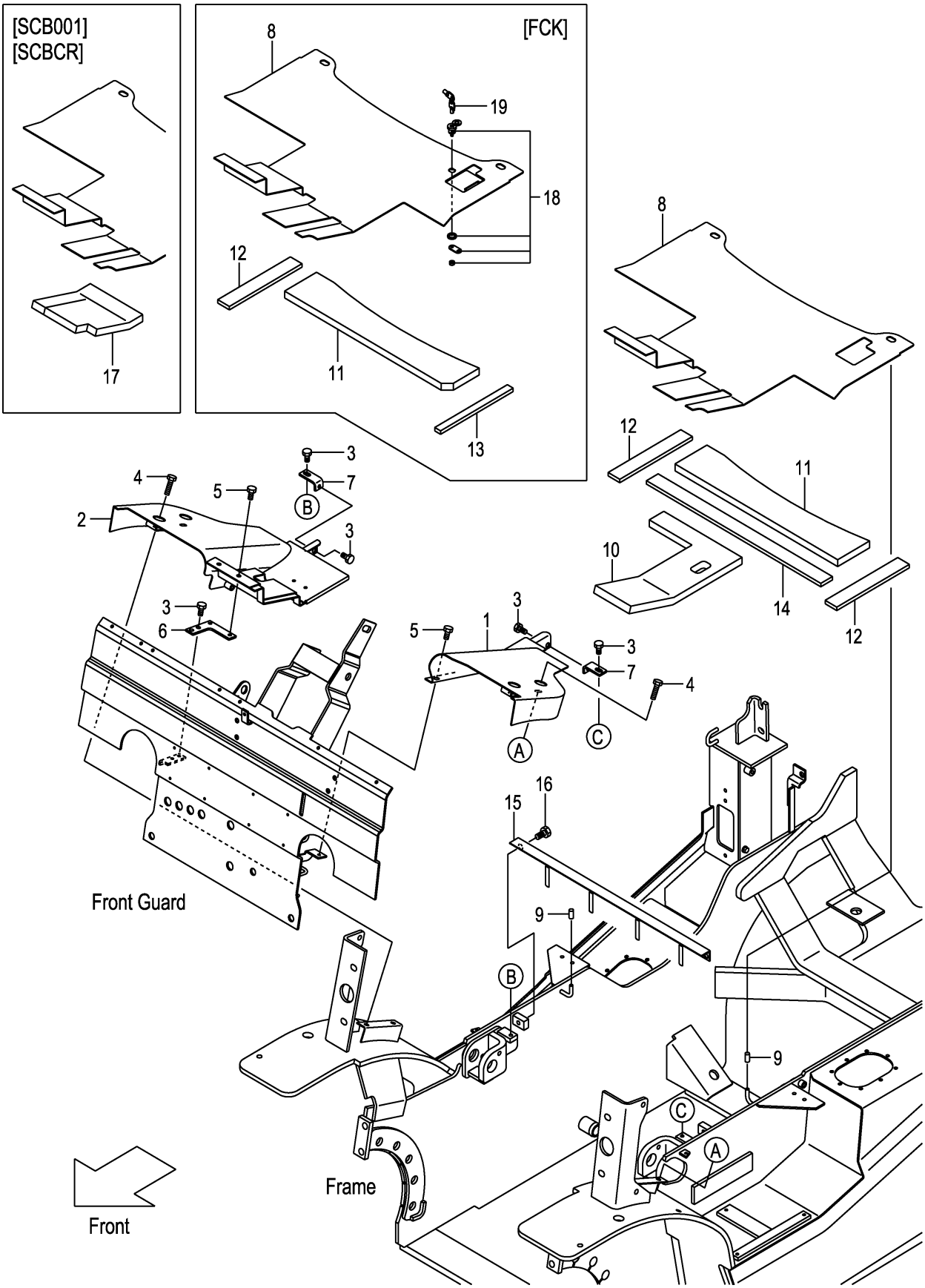

A:FD30C3Z FD30T3Z

Item No	Part No.	Mark	Description		Req'd	Remarks : Serial No.
1	22N56-50201		COVER,LH	ｶﾊﾞｰ	1	
2	22N56-50211		COVER,RH	ｶﾊﾞｰ	1	1-111
-	22N56-50212		COVER,RH	ｶﾊﾞｰ	1	112-
3	01185-08016		BOLT	ﾎﾞﾙﾄ	6	
4	01185-08030		BOLT	ﾎﾞﾙﾄ	4	
5	273A6-42471		BOLT	ﾎﾞﾙﾄ	3	
6	22N56-52251		BRACKET	ﾌﾞﾗｹｯﾄ	1	
7	22N56-52241		BRACKET	ﾌﾞﾗｹｯﾄ	2	
8	22N56-52201		BOARD,FLOOR	ﾎﾞｰﾄﾞ	1	
-	52N58-10201		BOARD,FLOOR	ﾎﾞｰﾄﾞ	1	[FCK]
9	216G6-52291		CAP	ｷｬｯﾌﾟ	2	
10	22N56-52222		RUBBER,FLOOR-BOARD	ﾗﾊﾞｰ	1	
11	22N56-52231		RUBBER,FLOOR-BOARD	ﾗﾊﾞｰ	1	
-	52N58-12201		RUBBER,FLOOR-BOARD	ﾗﾊﾞｰ	1	[FCK]
12	22N56-52351		RUBBER	ﾗﾊﾞｰ	2	
-	22N56-52351		RUBBER	ﾗﾊﾞｰ	1	[FCK]
13	216G6-52161		RUBBER	ﾗﾊﾞｰ	1	[FCK]
14	22N56-52361		RUBBER	ﾗﾊﾞｰ	1	
15	22N56-52402		ANGLE	ｱﾝｸﾞﾙ	1	
16	01185-10016		BOLT	ﾎﾞﾙﾄ	2	
17	52N55-32331		RUBBER,FLOOR-BOARD	ﾗﾊﾞｰ	1	[SCB001][SCBCR]
A1	52N58-10301		LOCK-ASSY,COIN	ｺｲﾝﾛｯｸｱｯｾﾝ	1	[FCK] INC.18,19
18	52N58-12501		CYL,KEY	ｼﾘﾝﾀﾞ	1	[FCK]
19	52N58-12511		KEY	ｷｰ	1	[FCK](1SET=2PCS)

FIG.123 STEP & FLOOR MAT

(F7Z36460) ｽﾃｯﾌﾟ&ﾌﾛｱﾏｯﾄ

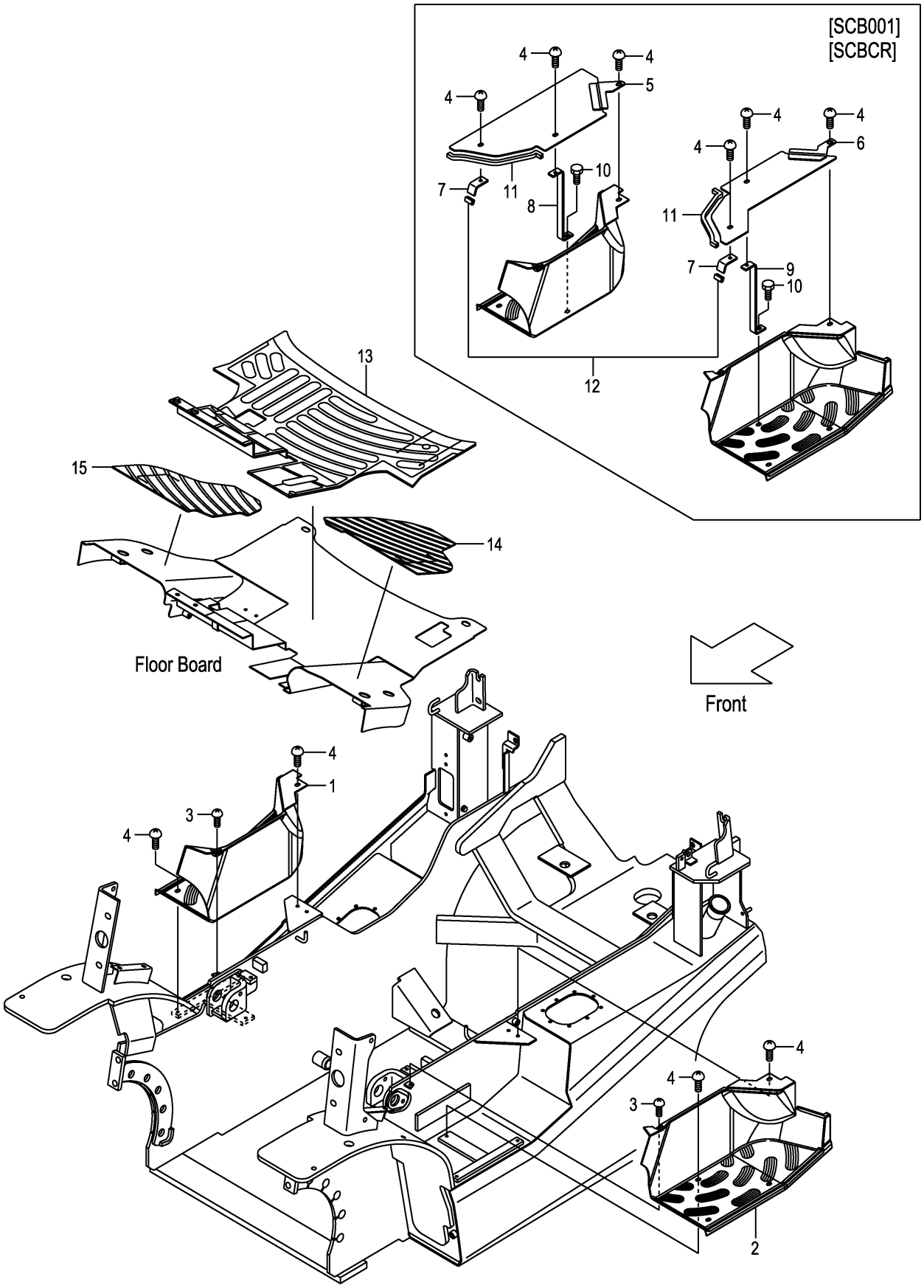

A:FD30C3Z FD30T3Z

Item No	Part No.	Mark	Description		Req'd	Remarks : Serial No.
1	22N56-42901		COVER,STEP,RH	ｶﾊﾞｰ	1	(WITHOUT HR)
-	52N55-42601		COVER,STEP,RH	ｶﾊﾞｰ	1	[AW061]
2	22N56-42911		COVER,STEP,LH	ｶﾊﾞｰ	1	
-	52N55-42611		COVER,STEP,LH	ｶﾊﾞｰ	1	[AW061]
3	214A6-42771		SCREW	ｽｸﾘｭ	2	
-	214A6-42771		SCREW	ｽｸﾘｭ	1	[HR]
4	278M6-42031		SCREW	ｽｸﾘｭ	8	
-	278M6-42031		SCREW	ｽｸﾘｭ	4	[HR]
-	278M6-42031		SCREW	ｽｸﾘｭ	10	[SCB001][SCBCR]
-	278M6-42031		SCREW	ｽｸﾘｭ	5	[HR/SCB001][HR/SCBCR]
5	52N55-32051		PLATE,STEP,RH	ﾌﾟﾚｰﾄ	1	[SCB001][SCBCR]
						(WITHOUT HR/SCB001,HR/SCBCR)
6	52N55-32061		PLATE,STEP,LH	ﾌﾟﾚｰﾄ	1	[SCB001][SCBCR]
7	52N55-32091		BRACKET	ﾌﾞﾗｹｯﾄ	2	[SCB001][SCBCR]
-	52N55-32091		BRACKET	ﾌﾞﾗｹｯﾄ	1	[HR/SCB001][HR/SCBCR]
8	52N55-32101		BRACKET,RH	ﾌﾞﾗｹｯﾄ	1	[SCB001][SCBCR]
						(WITHOUT HR/SCB001,HR/SCBCR)
9	52N55-32111		BRACKET,LH	ﾌﾞﾗｹｯﾄ	1	[SCB001][SCBCR]
10	216H3-92281		BOLT	ﾎﾞﾙﾄ	2	[SCB001][SCBCR]
-	216H3-92281		BOLT	ﾎﾞﾙﾄ	1	[HR/SCB001][HR/SCBCR]
11	509S3-92261		RUBBER,SEAL	ﾗﾊﾞｰ	2	[SCB001][SCBCR]
-	509S3-92261		RUBBER,SEAL	ﾗﾊﾞｰ	1	[HR/SCB001][HR/SCBCR]
12	209P6-42831		EDGING	ｴｯｼﾞﾝｸﾞ	1	[SCB001][SCBCR]
13	22N56-52302		MAT,FLOOR	ﾏｯﾄ	1	
-	52N58-10311		MAT,FLOOR	ﾏｯﾄ	1	[FCK]
14	22N56-52311		MAT,FLOOR,LH	ﾏｯﾄ	1	
15	22N56-52321		MAT,FLOOR,RH	ﾏｯﾄ	1	

FIG.124 FRONT COVER (CLUTCH)

(F7Z36470) フロントカバー

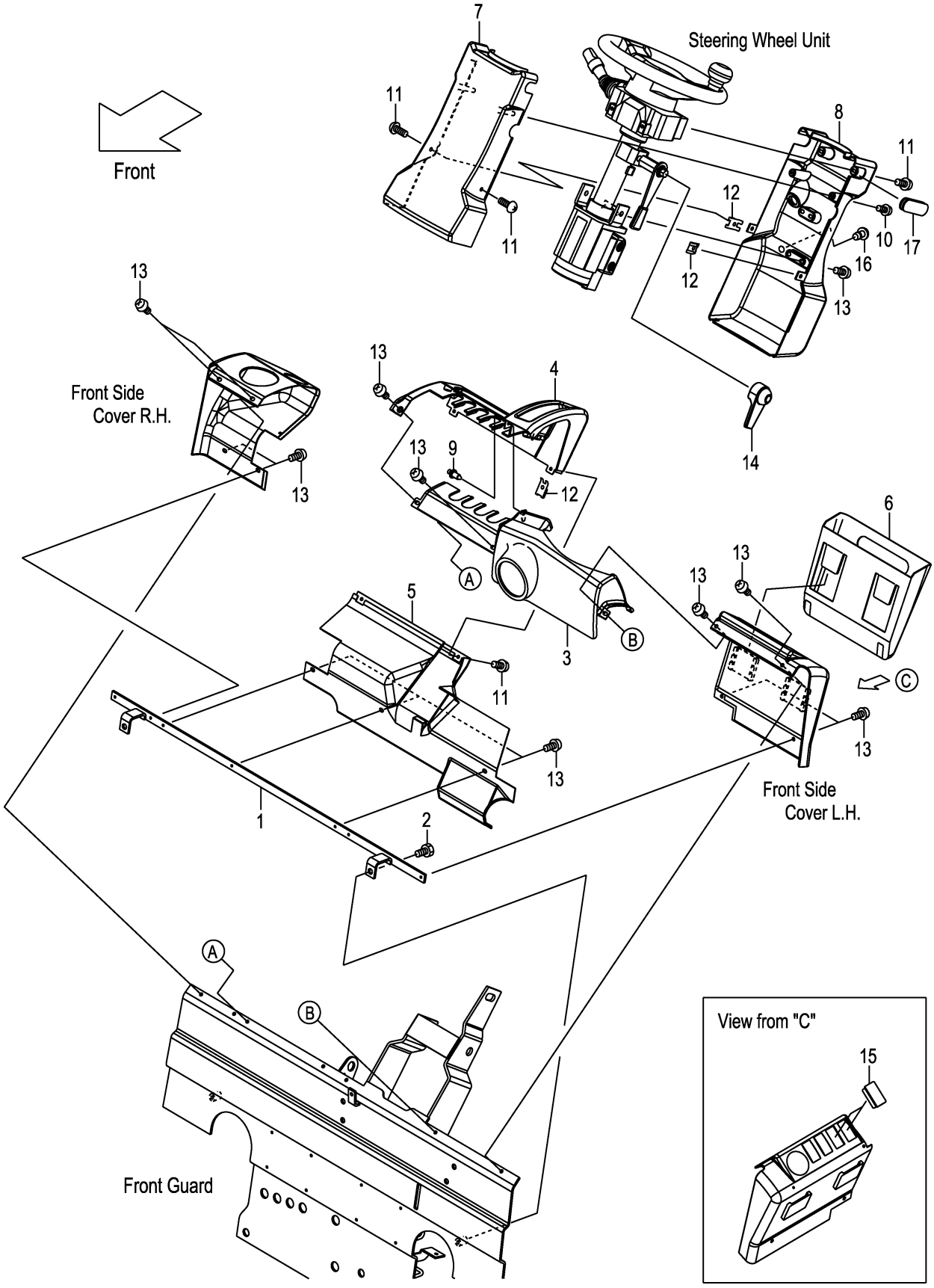

A:FD30C3Z

Item No	Part No.	Mark	Description		Req'd	Remarks : Serial No.
1	22N56-42861		BRACKET,COVER	ﾌﾞﾗｹｯﾄ	1	
2	01185-08016		BOLT	ﾎﾞﾙﾄ	2	
3	22N56-42741		COVER,FRONT	ｶﾊﾞｰ	1	
4	22N56-42701		COVER,METER-PANEL	ｶﾊﾞｰ	1	
5	22N56-42731		COVER,LOWER	ｶﾊﾞｰ	1	
6	22N56-42751		POCKET,BINDER	ﾎﾟｹｯﾄ	1	
7	22N54-12321		COVER,HANDLE,FRONT	ｶﾊﾞｰ	1	
8	22N54-12311		COVER,HANDLE,REAR	ｶﾊﾞｰ	1	
-	52N57-72001		COVER,HANDLE,REAR	ｶﾊﾞｰ	1	[SWD]
9	22N56-42791		RIVET,PUSH	ﾘﾍﾞｯﾄ	1	
10	222A2-42031		SCREW	ｽｸﾘｭ	2	
11	209K2-43001		SCREW	ｽｸﾘｭ	6	
12	281E6-42521		NUT,SPEED	ﾅｯﾄ	4	
13	225R6-42031		SCREW	ｽｸﾘｭ	15	
14	22N54-12201		COVER,TILT-LOCK	ｶﾊﾞｰ	1	
15	256T2-42121		CAP	ｷｬｯﾌﾟ	2	
16	281E6-42571		PLUG,HOLE	ﾌﾟﾗｸﾞ	1	
17	239A4-12541		GROMMET,HANDLE-COVER	ｸﾞﾛﾒｯﾄ	1	

FIG.125 FRONT COVER (TOR-CON)

(F7Z36480) フロントカバー

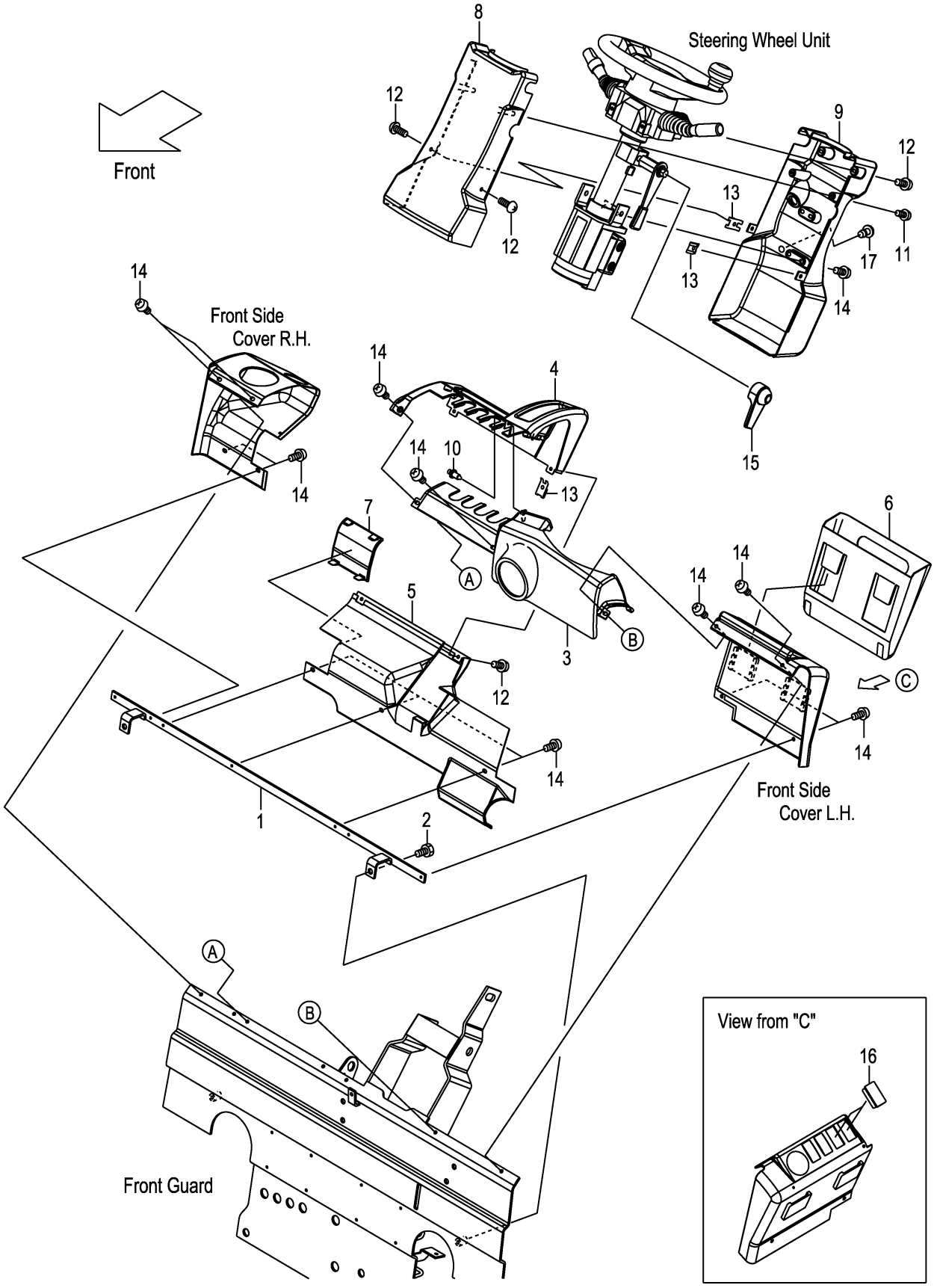

A:FD30T3Z

Item No	Part No.	Mark	Description		Req'd	Remarks : Serial No.
1	22N56-42861		BRACKET,COVER	ﾌﾞﾗｹｯﾄ	1	
2	01185-08016		BOLT	ﾎﾞﾙﾄ	2	
3	22N56-42741		COVER,FRONT	ｶﾊﾞｰ	1	
4	22N56-42701		COVER,METER-PANEL	ｶﾊﾞｰ	1	
5	22N56-42731		COVER,LOWER	ｶﾊﾞｰ	1	
6	22N56-42751		POCKET,BINDER	ﾎﾟｹｯﾄ	1	
7	22N56-42771		COVER,CHANGE-LEVER	ｶﾊﾞｰ	1	
8	22N54-12321		COVER,HANDLE,FRONT	ｶﾊﾞｰ	1	
9	22N54-12311		COVER,HANDLE,REAR	ｶﾊﾞｰ	1	
-	52N57-72001		COVER,HANDLE,REAR	ｶﾊﾞｰ	1	[SWD]
10	22N56-42791		RIVET,PUSH	ﾘﾍﾞｯﾄ	1	
11	222A2-42031		SCREW	ｽｸﾘｭ	2	
12	209K2-43001		SCREW	ｽｸﾘｭ	6	
13	281E6-42521		NUT,SPEED	ﾅｯﾄ	4	
14	225R6-42031		SCREW	ｽｸﾘｭ	15	
15	22N54-12201		COVER,TILT-LOCK	ｶﾊﾞｰ	1	
16	256T2-42121		CAP	ｷｬｯﾌﾟ	2	
17	281E6-42571		PLUG,HOLE	ﾌﾟﾗｸﾞ	1	

FIG.126 SIDE COVER

(F7Z364A0) サイドカバー

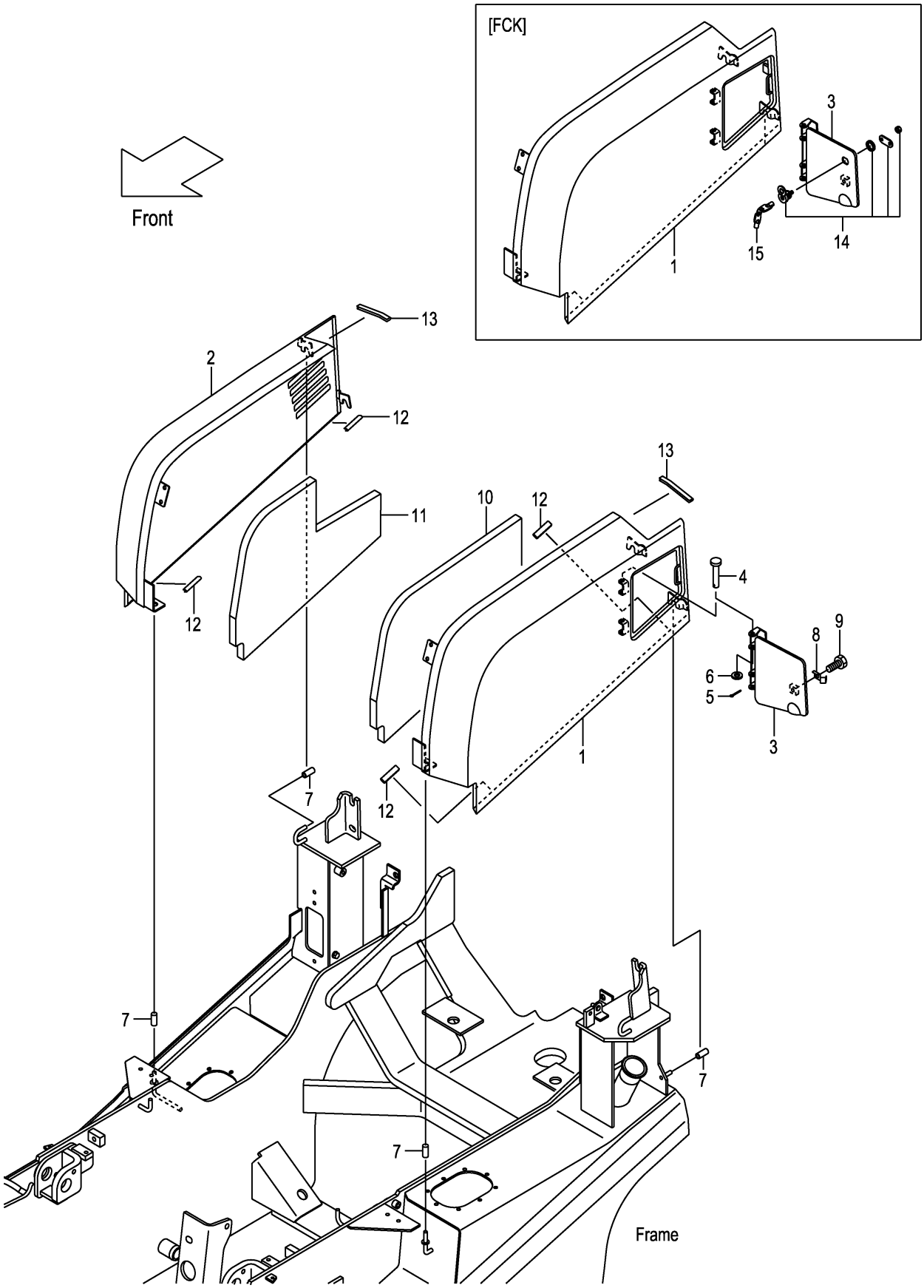

A:FD30C3Z FD30T3Z

Item No	Part No.	Mark	Description		Req'd	Remarks : Serial No.
1	22N56-40252		COVER,SIDE,LH	ｶﾊﾞｰ	1	
-	52N58-10211		COVER,SIDE,LH	ｶﾊﾞｰ	1	[FCK]
2	22N56-40262		COVER,SIDE,RH	ｶﾊﾞｰ	1	
3	22N56-40272		COVER,FUEL-CAP	ｶﾊﾞｰ	1	
-	52N58-10221		COVER,FUEL-CAP	ｶﾊﾞｰ	1	[FCK]
4	02262-08045		PIN,CLEVIS	ﾋﾟﾝ	2	
5	02200-02020		PIN,COTTER	ﾋﾟﾝ	2	1-109
-	216H3-92171		PIN,SNAP	ﾋﾟﾝ	2	110-
6	02000-00008		WASHER	ﾜｯｼｬ	2	
7	216G6-52291		CAP	ｷｬｯﾌﾟ	6	
8	22N56-43251		SPRING,LEAF	ｽﾌﾟﾘﾝｸﾞ	1	
9	01183-08012		BOLT	ﾎﾞﾙﾄ	1	
10	22N56-40411		RUBBER,FOAM,LH	ﾗﾊﾞｰ	1	
11	22N56-40421		RUBBER,FOAM,RH	ﾗﾊﾞｰ	1	
12	209P6-42831		EDGING,L=50	ｴｯｼﾞﾝｸﾞ	4	
13	243C6-42821		EDGING,L=100	ｴｯｼﾞﾝｸﾞ	2	
A1	52N58-10301		LOCK-ASSY,COIN	ｺｲﾝﾛｯｸｱｯｾﾝ	1	[FCK] INC.14,15
14	52N58-12501		CYL,KEY	ｼﾘﾝﾀﾞ	1	[FCK]
15	52N58-12511		KEY	ｷｰ	1	[FCK](1SET=2PCS)

FIG.127 SIDE COVER [SCB001][SCBCR]

(F7Z364B0) サイドカバー

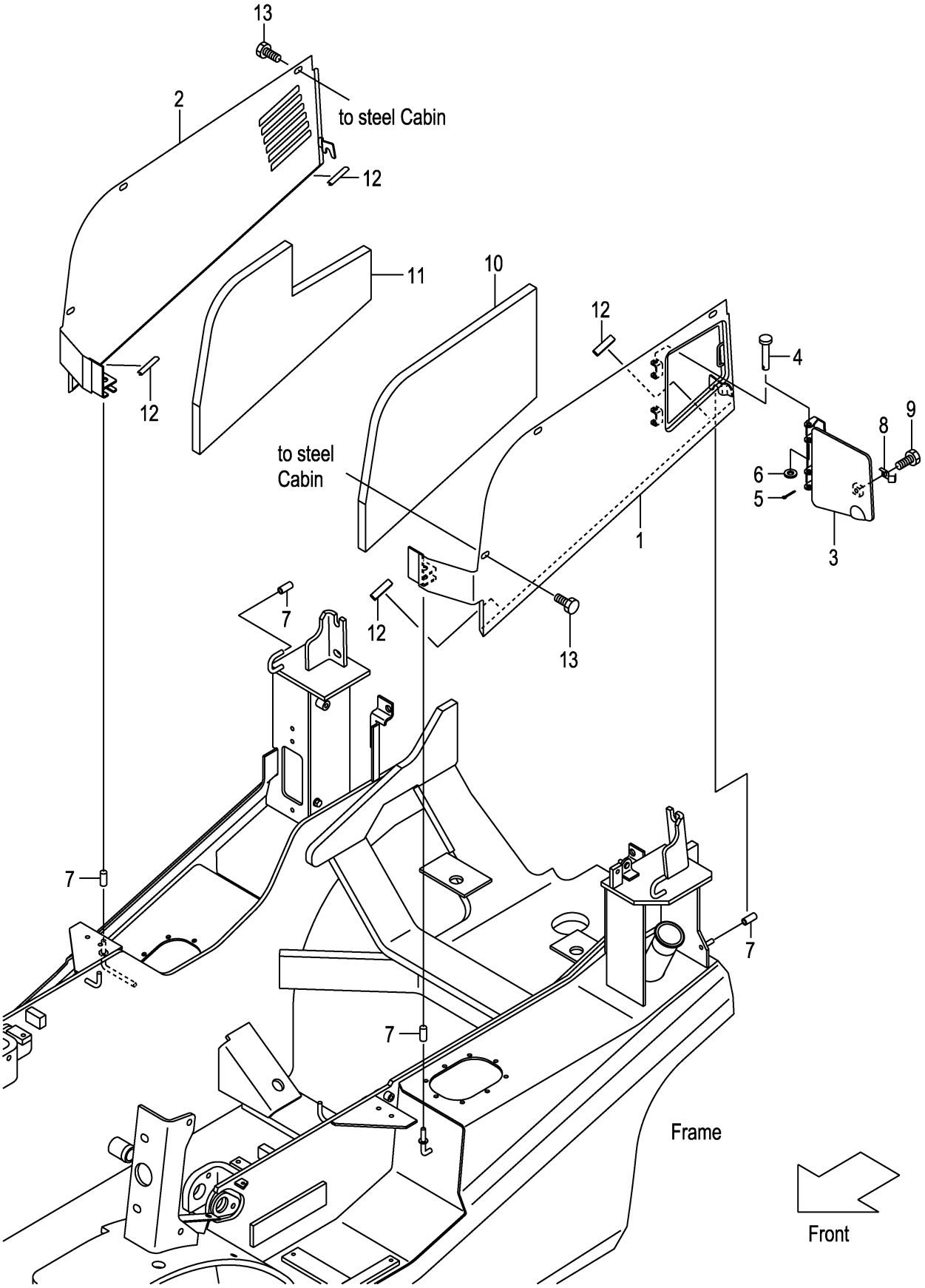

A:FD30C3Z FD30T3Z

Item No	Part No.	Mark	Description		Req'd	Remarks : Serial No.
1	52N55-30511		COVER,SIDE,LH	ｶﾊﾞｰ	1	[SCB001][SCBCR]
2	52N55-30501		COVER,SIDE,RH	ｶﾊﾞｰ	1	[SCB001][SCBCR]
3	22N56-40272		COVER,FUEL-CAP	ｶﾊﾞｰ	1	[SCB001][SCBCR]
4	02262-08045		PIN,CLEVIS	ﾋﾟﾝ	2	[SCB001][SCBCR]
5	02200-02020		PIN,COTTER	ﾋﾟﾝ	2	1-109 [SCB001][SCBCR]
-	216H3-92171		PIN,SNAP	ﾋﾟﾝ	2	110- [SCB001][SCBCR]
6	02000-00008		WASHER	ﾜｯｼｬ	2	[SCB001][SCBCR]
7	216G6-52291		CAP	ｷｬｯﾌﾟ	6	[SCB001][SCBCR]
8	22N56-43251		SPRING,LEAF	ｽﾌﾟﾘﾝｸﾞ	1	[SCB001][SCBCR]
9	01183-08012		BOLT	ﾎﾞﾙﾄ	1	[SCB001][SCBCR]
10	52N55-32311		RUBBER,FOAM,LH	ﾗﾊﾞｰ	1	[SCB001][SCBCR]
11	52N55-32301		RUBBER,FOAM,RH	ﾗﾊﾞｰ	1	[SCB001][SCBCR]
12	209P6-42831		EDGING,L=50	ｴｯｼﾞﾝｸﾞ	4	[SCB001][SCBCR]
13	01185-08025		BOLT	ﾎﾞﾙﾄ	6	[SCB001][SCBCR]

FIG.128 FRONT SIDE COVER

(F7Z364C0) フロントサイドカバー

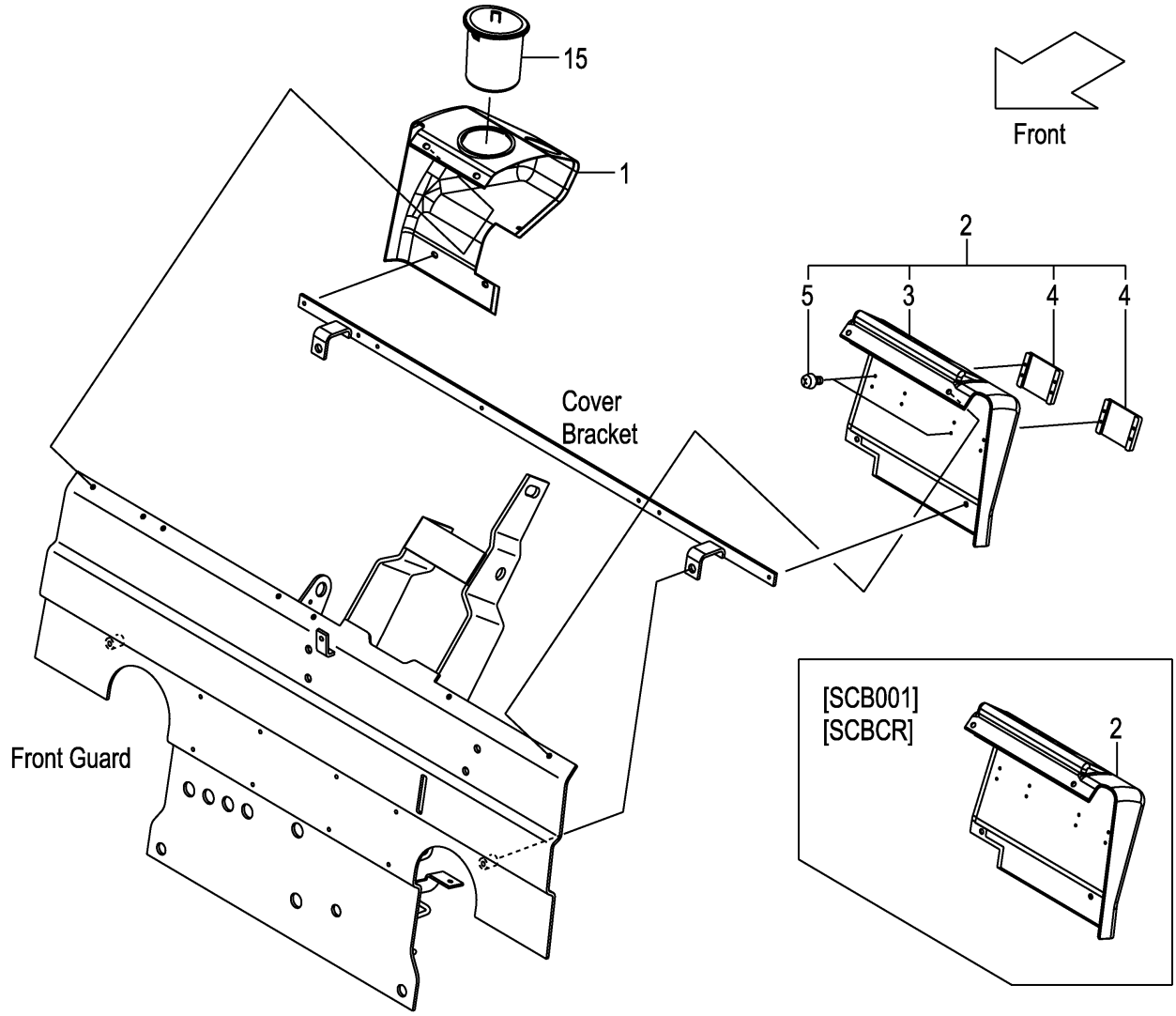

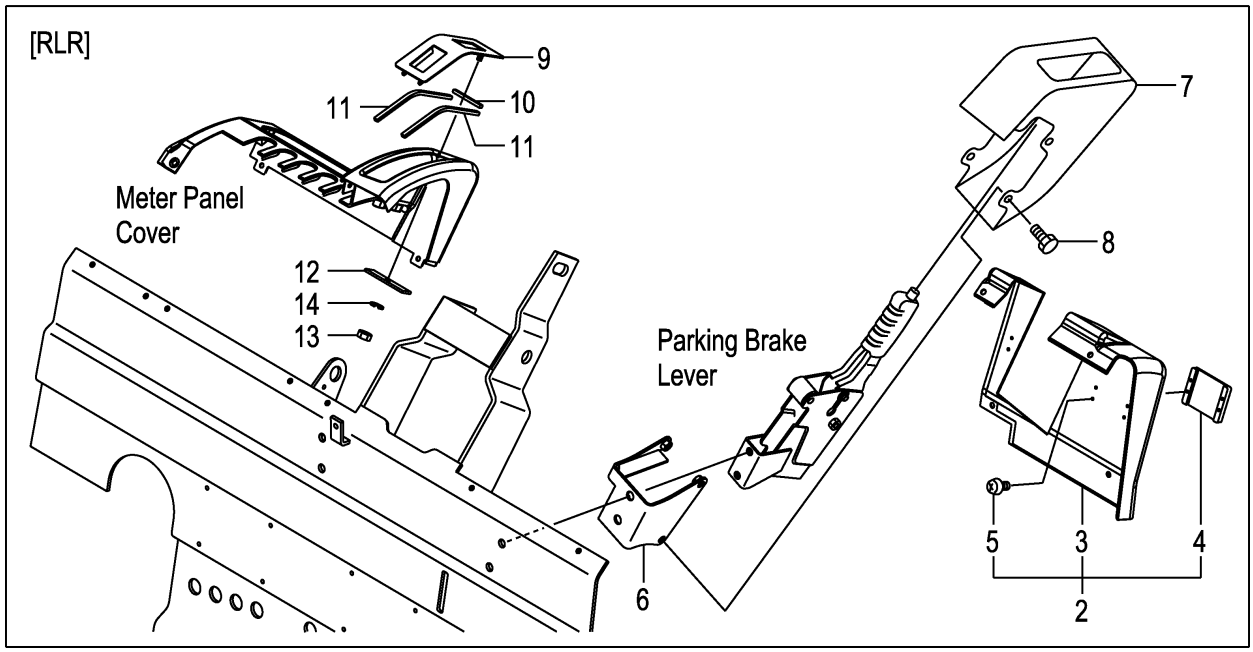

A:FD30C3Z FD30T3Z

Item No	Part No.	Mark	Description		Req'd	Remarks : Serial No.
1	22N56-42711		COVER,RH	ｶﾊﾞｰ	1	
-	22N56-43411		COVER,RH	ｶﾊﾞｰ	1	[TTM][TPM]
-	52N55-32141		COVER,RH	ｶﾊﾞｰ	1	[SCB001][SCBCR]
-	52N55-32401		COVER,RH	ｶﾊﾞｰ	1	[TTM/SCB001][TPM/SCB001]
-	52N55-32401		COVER,RH	ｶﾊﾞｰ	1	[TTM/SCBCR][TPM/SCBCR]
2	22N56-42851		COVER,LH	ｶﾊﾞｰ	1	INC.3-5
-	22N56-43021		COVER,LH	ｶﾊﾞｰ	1	[RWL/BB SW/LPG]
						[RWL/BBASW/LPG] INC.3-5
-	22N56-43021		COVER,LH	ｶﾊﾞｰ	1	[RWL/BB SW/AW071]
						[RWL/BBASW/AW071] INC.3-5
-	22N56-43021		COVER,LH	ｶﾊﾞｰ	1	[RWL/LPG/AW071] INC.3-5
-	22N56-43021		COVER,LH	ｶﾊﾞｰ	1	[BB SW/LPG/AW071]
						[BBASW/LPG/AW071] INC.3-5
-	22N56-43031		COVER,LH	ｶﾊﾞｰ	1	[AM][TTM/TPM] INC.3-5
-	52E00-52191		COVER,LH	ｶﾊﾞｰ	1	[LPG/LPGL] INC.3-5
-	52N55-40411		COVER,LH	ｶﾊﾞｰ	1	[AW071/WAS071] INC.3-5
-	52N55-42251		COVER,LH	ｶﾊﾞｰ	1	[SCB001][SCBCR]
-	52N55-32411		COVER,LH	ｶﾊﾞｰ	1	[AM/SCB001][TTM/TPM/SCB001]
-	52N55-32411		COVER,LH	ｶﾊﾞｰ	1	[AM/SCBCR][TTM/TPM/SCBCR]
-	22N56-43771		COVER,LH	ｶﾊﾞｰ	1	[PLR] INC.3-5
3	22N56-42721		COVER,LH	ｶﾊﾞｰ	1	(WITHOUT SCB001,SCBCR)
-	22N56-43421		COVER,LH	ｶﾊﾞｰ	1	[RWL/BB SW/LPG]
						[RWL/BBASW/LPG]
-	22N56-43421		COVER,LH	ｶﾊﾞｰ	1	[RWL/BB SW/AW071]
						[RWL/BBASW/AW071]
-	22N56-43421		COVER,LH	ｶﾊﾞｰ	1	[RWL/LPG/AW071]
-	22N56-43421		COVER,LH	ｶﾊﾞｰ	1	[BB SW/LPG/AW071]
						[BBASW/LPG/AW071]
-	22N56-43431		COVER,LH	ｶﾊﾞｰ	1	[AM][TTM/TPM]
-	52E00-52201		COVER,LH	ｶﾊﾞｰ	1	[LPG/LPGL]
-	52N55-40081		COVER,LH	ｶﾊﾞｰ	1	[AW071/WAS071]
-	22N56-43871		COVER,LH	ｶﾊﾞｰ	1	[PLR]
4	22N56-42811		COVER	ｶﾊﾞｰ	2	(WITHOUT SCB001,SCBCR)
-	22N56-42811		COVER	ｶﾊﾞｰ	1	[PLR]
5	214A6-42781		SCREW	ｽｸﾘｭ	8	(WITHOUT SCB001,SCBCR)
-	214A6-42781		SCREW	ｽｸﾘｭ	4	[PLR]
6	22N56-43801		BRACKET	ﾌﾞﾗｹｯﾄ	1	[PLR]
7	22N56-43831		COVER,PLR	ｶﾊﾞｰ	1	[PLR]
8	01185-08015		BOLT	ﾎﾞﾙﾄ	3	[PLR]
9	22N56-43881		COVER,PLR	ｶﾊﾞｰ	1	[PLR]
10	22N56-43911		RUBBER	ﾗﾊﾞｰ	1	[PLR]
11	22N56-43921		RUBBER	ﾗﾊﾞｰ	2	[PLR]
12	22N56-43931		PLATE	ﾌﾟﾚｰﾄ	1	[PLR]
13	01400-00006		NUT	ﾅｯﾄ	1	[PLR]
14	02010-00006		WASHER	ﾜｯｼｬ	1	[PLR]
15	22N56-42761		CUP,HOLDER	ｶｯﾌﾟ	1	(WITHOUT SM)

FIG.129 SEAT

(F7Z36810) シート

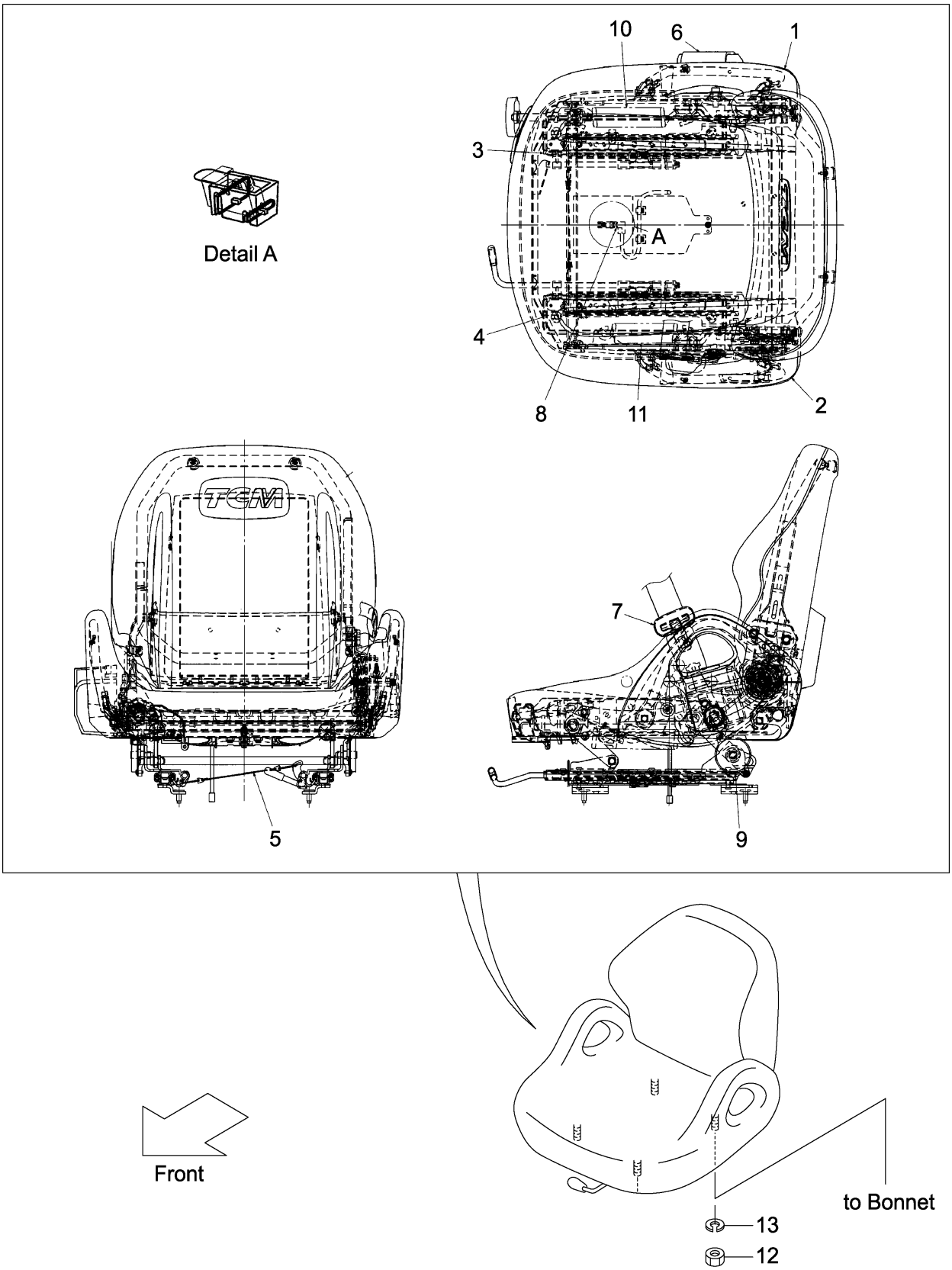

FIG.129

(F7Z36810)

A:FD30C3Z FD30T3Z

Item No	Part No.	Mark	Description		Req'd	Remarks : Serial No.
A1	242F6-80101		SEAT-ASSY	ｼｰﾄｱｯｾﾝ	1	INC.1-7,9-11
-	542F3-80101		SEAT-ASSY	ｼｰﾄｱｯｾﾝ	1	(SEAT SW) INC.1-11
-	52N56-22201		SEAT-ASSY	ｼｰﾄｱｯｾﾝ	1	[OKM][SIL] INC.1-11
1	242F6-82041		SHIELD,RH	ｼｰﾙﾄﾞ	1	
2	242F6-82051		SHIELD,LH	ｼｰﾙﾄﾞ	1	
3	242F6-82081		TRACK,RH	ﾄﾗｯｸ	1	
4	242F6-82091		TRACK,LH	ﾄﾗｯｸ	1	
5	242F6-82101		WIRE	ﾜｲﾔ	1	
6	242F6-82111		BELT,SEAT,OUTER	ﾍﾞﾙﾄ	1	
7	242F6-82121		BELT,SEAT,INNER	ﾍﾞﾙﾄ	1	
8	542F3-82011		SWITCH,SEAT	ｽｲｯﾁ	1	[OKM][SIL](SEAT SW)
9	242F6-82141		ABSORBER,SUSPENSION	ｱﾌﾞｿｰﾊﾞ	2	
10	242F6-82271		SPRING,TENSION	ｽﾌﾟﾘﾝｸﾞ	1	
11	242F6-82281		SPRING,TENSION	ｽﾌﾟﾘﾝｸﾞ	1	
12	01400-00008		NUT	ﾅｯﾄ	4	
13	02010-00008		WASHER	ﾜｯｼｬ	4	

FIG.130 SEAT [HGL]

(F7Z36820) シート

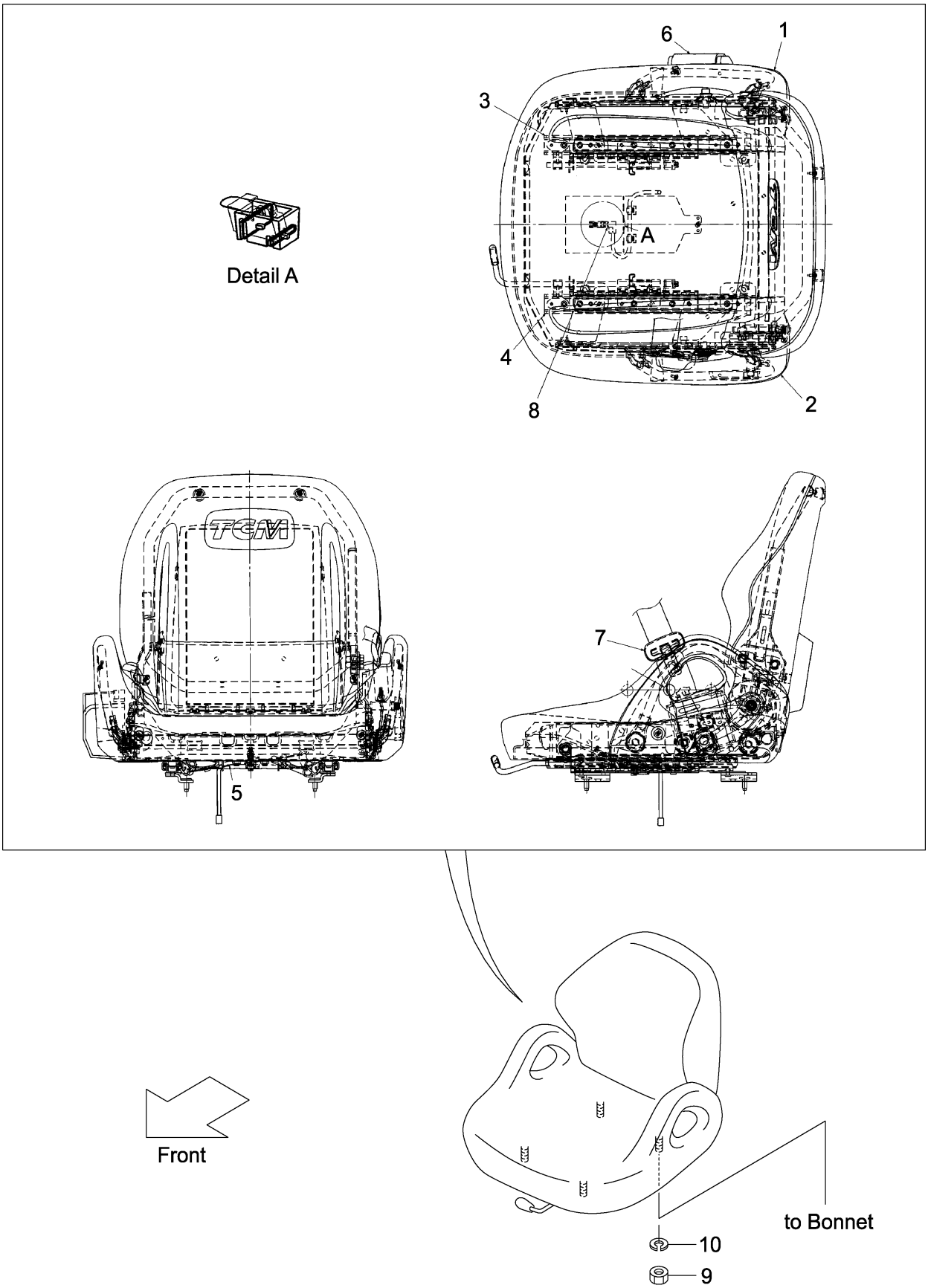

A:FD30C3Z FD30T3Z

Item No	Part No.	Mark	Description		Req'd	Remarks : Serial No.
A1	242F6-80201		SEAT-ASSY	ｼｰﾄｱｯｾﾝ	1	[HGL] INC.1-7
-	542F3-80201		SEAT-ASSY	ｼｰﾄｱｯｾﾝ	1	[HGL](SEAT SW) INC.1-8
1	242F6-82041		SHIELD,RH	ｼｰﾙﾄﾞ	1	[HGL]
2	242F6-82051		SHIELD,LH	ｼｰﾙﾄﾞ	1	[HGL]
3	242F6-82361		TRACK,RH	ﾄﾗｯｸ	1	[HGL]
4	242F6-82371		TRACK,LH	ﾄﾗｯｸ	1	[HGL]
5	242F6-82101		WIRE	ﾜｲﾔ	1	[HGL]
6	242F6-82111		BELT,SEAT,OUTER	ﾍﾞﾙﾄ	1	[HGL]
7	242F6-82121		BELT,SEAT,INNER	ﾍﾞﾙﾄ	1	[HGL]
8	542F3-82011		SWITCH,SEAT	ｽｲｯﾁ	1	[HGL](SEAT SW)
9	01400-00008		NUT	ﾅｯﾄ	4	[HGL]
10	02010-00008		WASHER	ﾜｯｼｬ	4	[HGL]

FIG.131 PUMP UNIT

(F7Z37110) ﾎﾟﾝﾌﾟﾕﾆｯﾄ

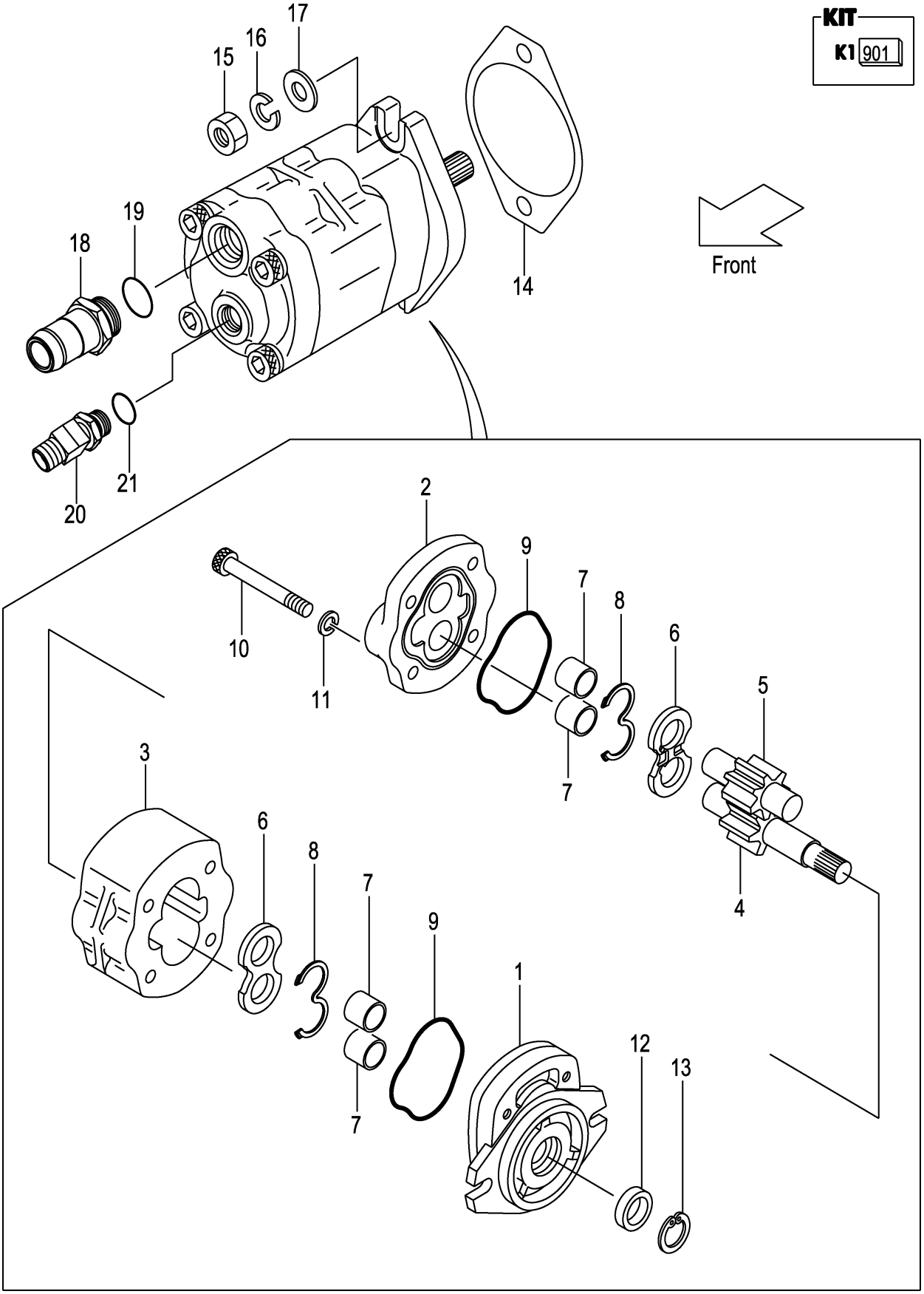

A:FD30C3Z FD30T3Z

Item No	Part No.	Mark	Description		Req'd	Remarks : Serial No.
A1	117M7-10401		PUMP-ASSY,GEAR	ｷﾞﾔｰﾎﾟﾝﾌﾟｱｯｾﾝ	1	INC.1-13
901	R-403-21988	K1	KIT,REPAIR	ﾘﾍﾟｱｷｯﾄ	1	INC.8,9,12
1	NO PART NO.	#	COVER,FRONT	ｶﾊﾞｰ	1	
2	NO PART NO.	#	COVER,REAR	ｶﾊﾞｰ	1	
3	NO PART NO.	#	BODY	ﾎﾞﾃﾞｨ	1	
4	NO PART NO.	#	GEAR,DRIVE	ｷﾞﾔｰ	1	
5	NO PART NO.	#	GEAR,DRIVEN	ｷﾞﾔｰ	1	
6	NO PART NO.	#	PLATE,SIDE	ﾌﾟﾚｰﾄ	2	
7	NO PART NO.	#	BUSHING	ﾌﾞｯｼﾝｸﾞ	4	
8	NO PART NO.	#*	GASKET	ｶﾞｽｹｯﾄ	2	
9	NO PART NO.	#*	GASKET	ｶﾞｽｹｯﾄ	2	
10	R-402-65004-41		BOLT	ﾎﾞﾙﾄ	4	
11	R-402-00710-12		WASHER	ﾜｯｼｬ	4	
12	NO PART NO.	#*	SEAL,OIL	ｼｰﾙ	1	
13	NO PART NO.	#	RING,SNAP	ｽﾅｯﾌﾟﾘﾝｸﾞ	1	
14	23657-12002		PACKING	ﾊﾟｯｷﾝｸﾞ	1	
15	01402-00010		NUT	ﾅｯﾄ	2	
16	02010-00010		WASHER	ﾜｯｼｬ	2	
17	02000-00010		WASHER	ﾜｯｼｬ	2	
A2	225A7-62021		NIPPLE-ASSY	ﾆｯﾌﾟﾙｱｯｾﾝ	1	INC.18,19
18	NO PART NO.	#	NIPPLE	ﾆｯﾌﾟﾙ	1	
19	03320-00290		O-RING	Oﾘﾝｸﾞ	1	
A3	271A7-60351		ADAPTER-ASSY	ｱﾀﾞﾌﾟﾀｱｯｾﾝ	1	INC.20,21
20	NO PART NO.	#	ADAPTER	ｱﾀﾞﾌﾟﾀ	1	
21	03320-00180		O-RING	Oﾘﾝｸﾞ	1	

FIG.132 CONTROL VALVE [2SV]

(F7Z37310) コントロールバルブ

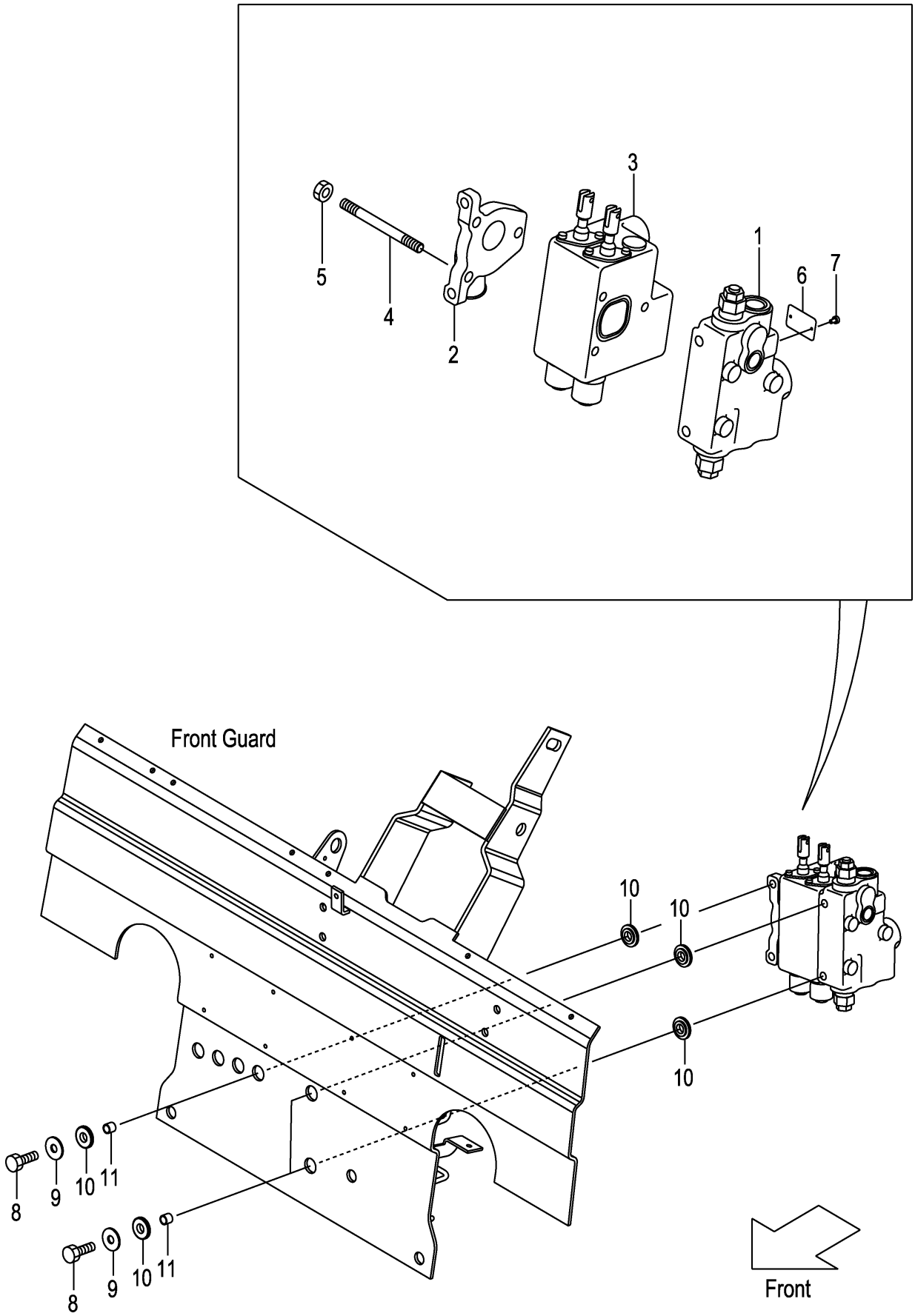

A:FD30C3Z FD30T3Z

Item No	Part No.	Mark	Description		Req'd	Remarks : Serial No.
A1	22N57-30221		VALVE-ASSY,CONTROL	ｺﾝﾄﾛｰﾙﾊﾞﾙﾌﾞｱｯｾﾝ	1	INC.1-7
-	52N54-60221		VALVE-ASSY,CONTROL	ｺﾝﾄﾛｰﾙﾊﾞﾙﾌﾞｱｯｾﾝ	1	[VLS] INC.1-7
-	22N57-30321		VALVE-ASSY,CONTROL	ｺﾝﾄﾛｰﾙﾊﾞﾙﾌﾞｱｯｾﾝ	1	[VLL][SIL] INC.1-7
1	B-402-36066		COVER,FRONT	ｶﾊﾞｰ	1	
-	B-402-36067		COVER,FRONT	ｶﾊﾞｰ	1	[VLS][VLL][SIL]
2	B-402-36603		COVER,REAR	ｶﾊﾞｰ	1	
-	B-402-36151		COVER,REAR	ｶﾊﾞｰ	1	[VLL][SIL]
3	B-402-37129		VALVE,COMBINATION	ﾊﾞﾙﾌﾞ	1	
-	B-402-37128		VALVE,COMBINATION	ﾊﾞﾙﾌﾞ	1	[VLL][SIL]
4	B-402-30905-02		BOLT,STUD	ﾎﾞﾙﾄ	3	
5	B-023-06632-41		NUT	ﾅｯﾄ	3	
6	B-402-00704-13		PLATE,NAME	ﾌﾟﾚｰﾄ	1	
7	B-026-50103		RIVET	ﾘﾍﾞｯﾄ	2	
8	22N57-32041		BOLT	ﾎﾞﾙﾄ	3	
9	216G7-32021		WASHER,PLANE	ﾜｯｼｬ	3	
10	22N57-42201		RUBBER,VALVE	ﾗﾊﾞｰ	6	
11	22N57-42211		COLLAR	ｶﾗｰ	3	

FIG.133 CONTROL VALVE [3SV]

(F7Z37320) ｺﾝﾄﾛｰﾙﾊﾞﾙﾌﾞ

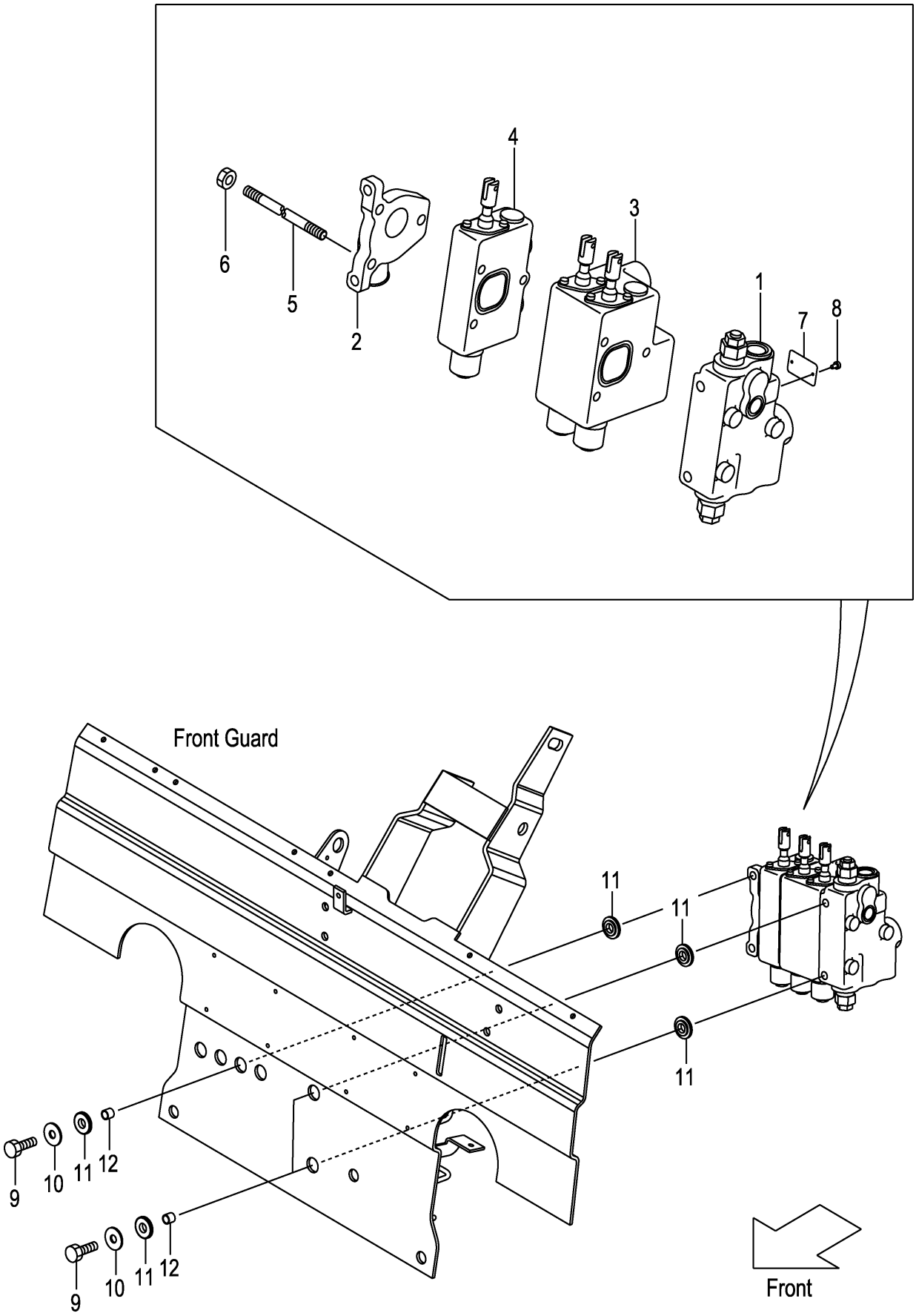

FIG.133
(F7Z37320)

A:FD30C3Z FD30T3Z

Item No	Part No.	Mark	Description		Req'd	Remarks : Serial No.
A1	22N57-30231		VALVE-ASSY,CONTROL	ｺﾝﾄﾛｰﾙﾊﾞﾙﾌﾞｱｯｾﾝ	1	[3SV] INC.1-8
-	52N54-60231		VALVE-ASSY,CONTROL	ｺﾝﾄﾛｰﾙﾊﾞﾙﾌﾞｱｯｾﾝ	1	[3SV/VLS] INC.1-8
-	22N57-30331		VALVE-ASSY,CONTROL	ｺﾝﾄﾛｰﾙﾊﾞﾙﾌﾞｱｯｾﾝ	1	[3SV/VLL][3SV/SIL] INC.1-8
1	B-402-36066		COVER,FRONT	ｶﾊﾞｰ	1	[3SV]
-	B-402-36067		COVER,FRONT	ｶﾊﾞｰ	1	[3SV/VLS][3SV/VLL][3SV/SIL]
2	B-402-36603		COVER,REAR	ｶﾊﾞｰ	1	[3SV]
-	B-402-36151		COVER,REAR	ｶﾊﾞｰ	1	[3SV/VLL][3SV/SIL]
3	B-402-37129		VALVE,COMBINATION	ﾊﾞﾙﾌﾞ	1	[3SV]
-	B-402-37128		VALVE,COMBINATION	ﾊﾞﾙﾌﾞ	1	[3SV/VLL][3SV/SIL]
4	B-402-36924		VALVE,SECTION	ﾊﾞﾙﾌﾞ	1	[3SV]
5	B-402-30905-03		BOLT,STUD	ﾎﾞﾙﾄ	3	[3SV]
6	B-023-06632-41		NUT	ﾅｯﾄ	3	[3SV]
7	B-402-00704-13		PLATE,NAME	ﾌﾟﾚｰﾄ	1	[3SV]
8	B-026-50103		RIVET	ﾘﾍﾞｯﾄ	2	[3SV]
9	22N57-32041		BOLT	ﾎﾞﾙﾄ	3	[3SV]
10	216G7-32021		WASHER,PLANE	ﾜｯｼｬ	3	[3SV]
11	22N57-42201		RUBBER,VALVE	ﾗﾊﾞｰ	6	[3SV]
12	22N57-42211		COLLAR	ｶﾗｰ	3	[3SV]

FIG.134 CONTROL VALVE [4SV]

(F7Z37330) コントロールバルブ

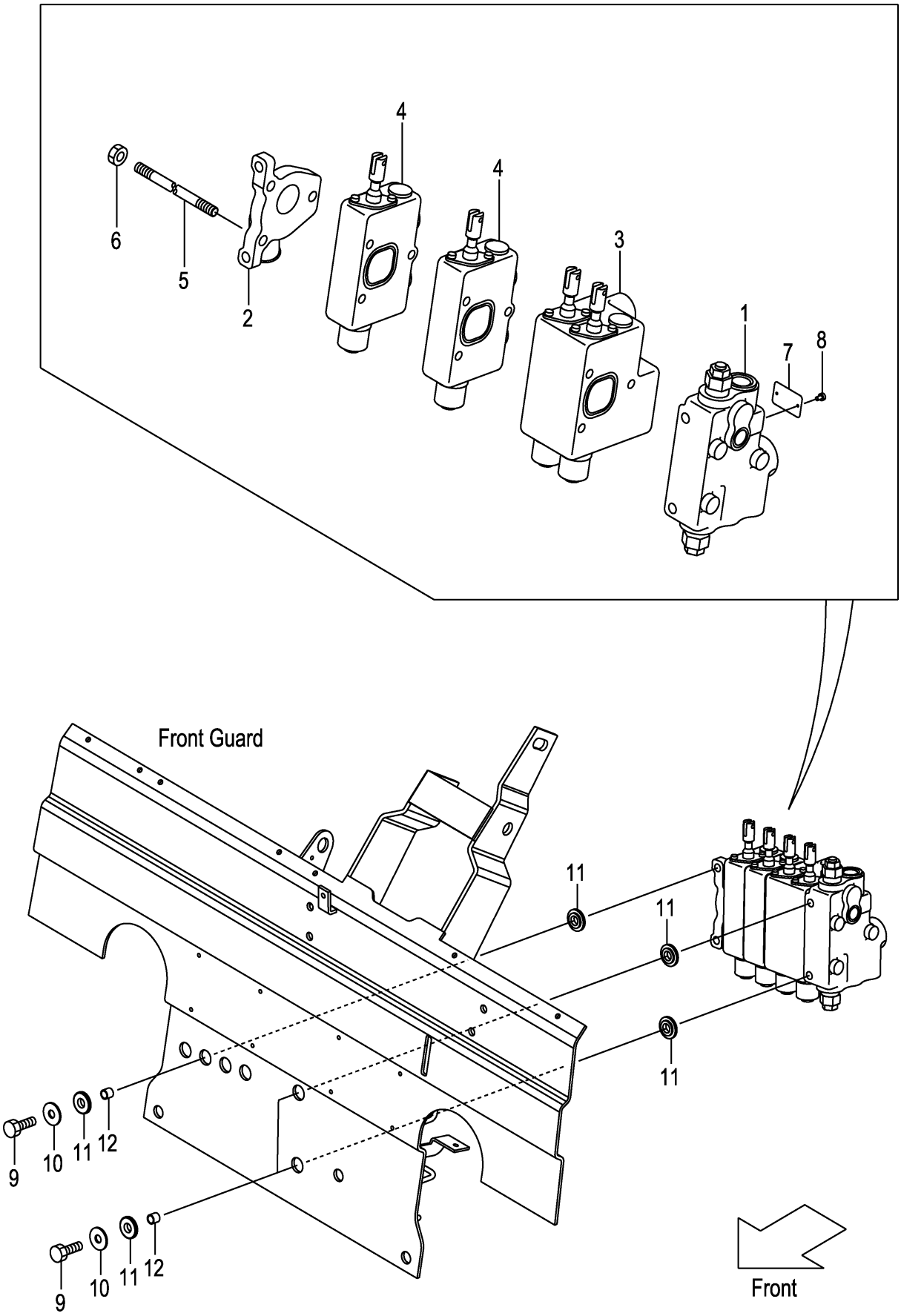

FIG.134
(F7Z37330)

A:FD30C3Z FD30T3Z

Item No	Part No.	Mark	Description		Req'd	Remarks : Serial No.
A1	22N57-30241		VALVE-ASSY,CONTROL	ｺﾝﾄﾛｰﾙﾊﾞﾙﾌﾞｱｯｾﾝ	1	[4SV] INC.1-8
-	52N54-60241		VALVE-ASSY,CONTROL	ｺﾝﾄﾛｰﾙﾊﾞﾙﾌﾞｱｯｾﾝ	1	[4SV/VLS] INC.1-8
-	22N57-30341		VALVE-ASSY,CONTROL	ｺﾝﾄﾛｰﾙﾊﾞﾙﾌﾞｱｯｾﾝ	1	[4SV/VLL][4SV/SIL] INC.1-8
1	B-402-36066		COVER,FRONT	ｶﾊﾞｰ	1	[4SV]
-	B-402-36067		COVER,FRONT	ｶﾊﾞｰ	1	[4SV/VLS][4SV/VLL][4SV/SIL]
2	B-402-36603		COVER,REAR	ｶﾊﾞｰ	1	[4SV]
-	B-402-36151		COVER,REAR	ｶﾊﾞｰ	1	[4SV/VLL][4SV/SIL]
3	B-402-37129		VALVE,COMBINATION	ﾊﾞﾙﾌﾞ	1	[4SV]
-	B-402-37128		VALVE,COMBINATION	ﾊﾞﾙﾌﾞ	1	[4SV/VLL][4SV/SIL]
4	B-402-36924		VALVE,SECTION	ﾊﾞﾙﾌﾞ	2	[4SV]
5	B-402-30905-04		BOLT,STUD	ﾎﾞﾙﾄ	3	[4SV]
6	B-023-06632-41		NUT	ﾅｯﾄ	3	[4SV]
7	B-402-00704-13		PLATE,NAME	ﾌﾟﾚｰﾄ	1	[4SV]
8	B-026-50103		RIVET	ﾘﾍﾞｯﾄ	2	[4SV]
9	22N57-32041		BOLT	ﾎﾞﾙﾄ	3	[4SV]
10	216G7-32021		WASHER,PLANE	ﾜｯｼｬ	3	[4SV]
11	22N57-42201		RUBBER,VALVE	ﾗﾊﾞｰ	6	[4SV]
12	22N57-42211		COLLAR	ｶﾗｰ	3	[4SV]

FIG.135 CONTROL VALVE [5SV]

(F7Z37340) ｺﾝﾄﾛｰﾙﾊﾞﾙﾌﾞ

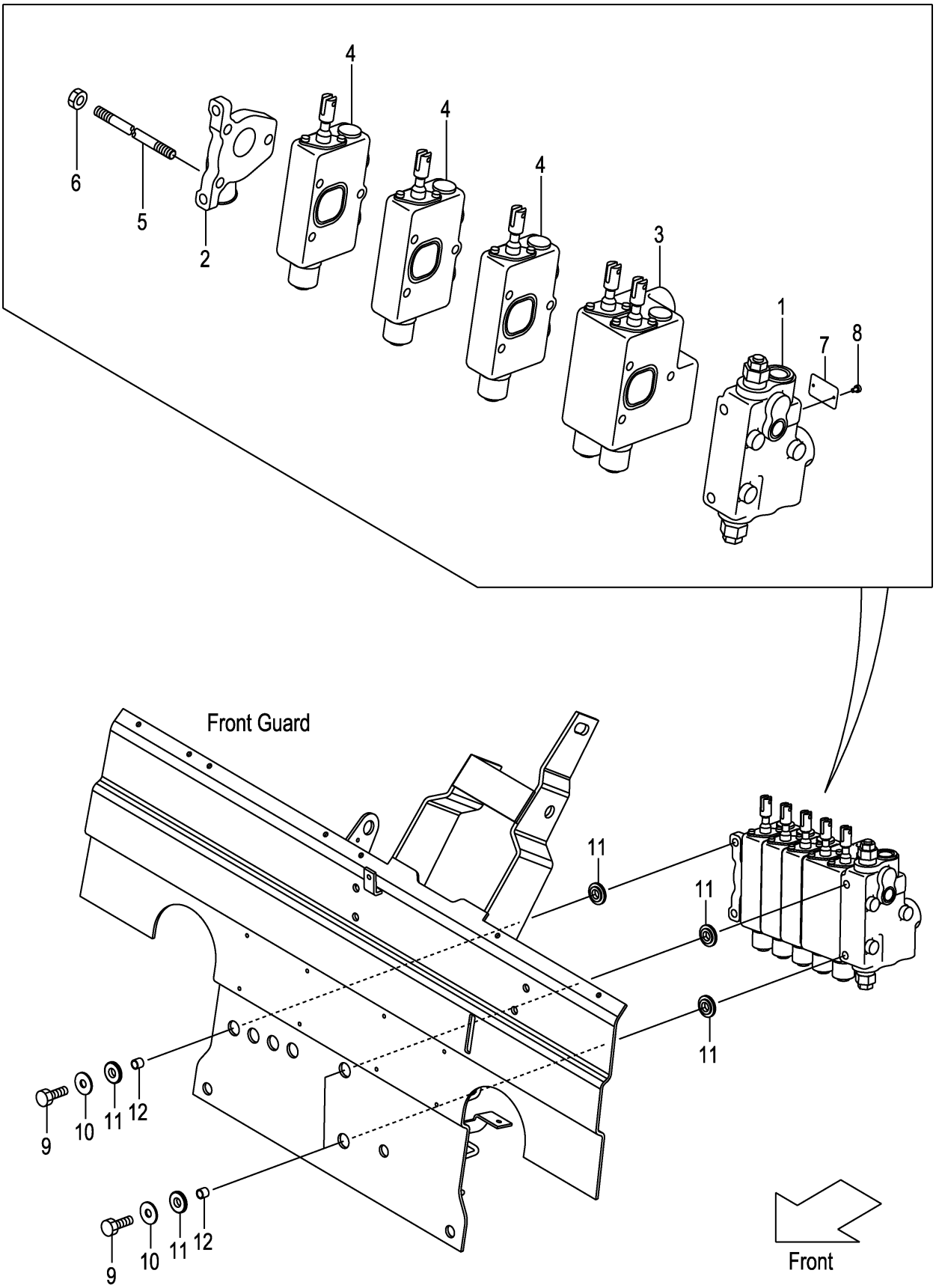

FIG.135
(F7Z37340)

A:FD30C3Z FD30T3Z

Item No	Part No.	Mark	Description		Req'd	Remarks : Serial No.
A1	22N57-30251		VALVE-ASSY,CONTROL	ｺﾝﾄﾛｰﾙﾊﾞﾙﾌﾞｱｯｾﾝ	1	[5SV] INC.1-8
-	52N54-60251		VALVE-ASSY,CONTROL	ｺﾝﾄﾛｰﾙﾊﾞﾙﾌﾞｱｯｾﾝ	1	[5SV/VLS] INC.1-8
-	22N57-30351		VALVE-ASSY,CONTROL	ｺﾝﾄﾛｰﾙﾊﾞﾙﾌﾞｱｯｾﾝ	1	[5SV/VLL][5SV/SIL] INC.1-8
1	B-402-36066		COVER,FRONT	ｶﾊﾞｰ	1	[5SV]
-	B-402-36067		COVER,FRONT	ｶﾊﾞｰ	1	[5SV/VLS][5SV/VLL][5SV/SIL]
2	B-402-36603		COVER,REAR	ｶﾊﾞｰ	1	[5SV]
-	B-402-36151		COVER,REAR	ｶﾊﾞｰ	1	[5SV/VLL][5SV/SIL]
3	B-402-37129		VALVE,COMBINATION	ﾊﾞﾙﾌﾞ	1	[5SV]
-	B-402-37128		VALVE,COMBINATION	ﾊﾞﾙﾌﾞ	1	[5SV/VLL][5SV/SIL]
4	B-402-36924		VALVE,SECTION	ﾊﾞﾙﾌﾞ	3	[5SV]
5	B-402-30905-05		BOLT,STUD	ﾎﾞﾙﾄ	3	[5SV]
6	B-023-06632-41		NUT	ﾅｯﾄ	3	[5SV]
7	B-402-00704-13		PLATE,NAME	ﾌﾟﾚｰﾄ	1	[5SV]
8	B-026-50103		RIVET	ﾘﾍﾞｯﾄ	2	[5SV]
9	22N57-32041		BOLT	ﾎﾞﾙﾄ	3	[5SV]
10	216G7-32021		WASHER,PLANE	ﾜｯｼｬ	3	[5SV]
11	22N57-42201		RUBBER,VALVE	ﾗﾊﾞｰ	6	[5SV]
12	22N57-42211		COLLAR	ｶﾗｰ	3	[5SV]

FIG.136 CONTROL VALVE FITTING

(F7Z37350) コントロールバルブフィッティング

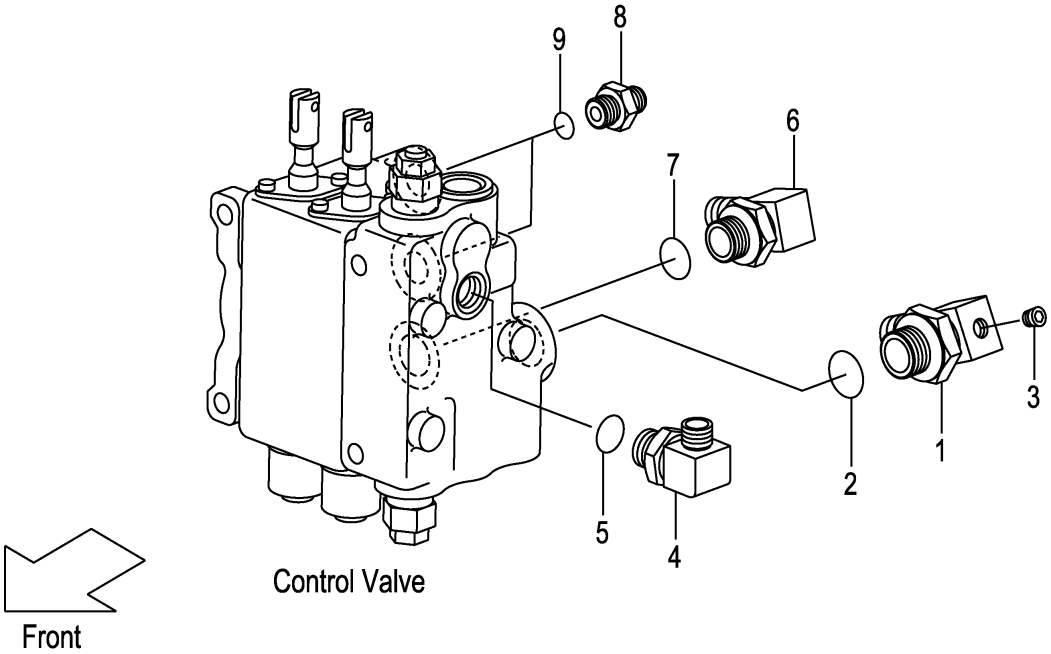

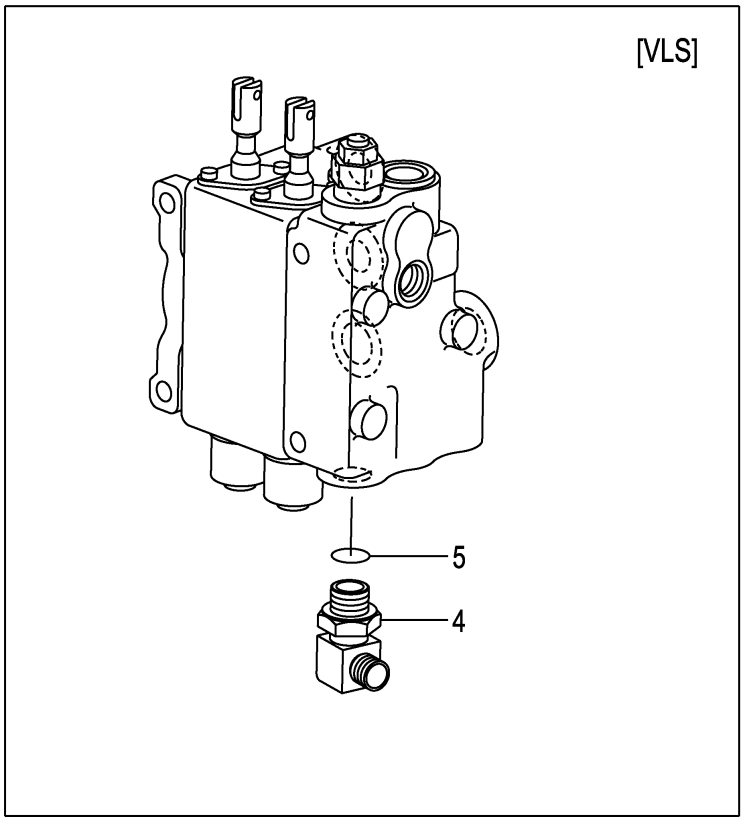

A:FD30C3Z FD30T3Z

Item No	Part No.	Mark	Description		Req'd	Remarks : Serial No.
A1	22N57-63011		ELBOW-ASSY	ｴﾙﾎﾞｱｯｾﾝ	1	INC.1-3
1	NO PART NO.	#	ELBOW	ｴﾙﾎﾞ	1	
2	03320-00240		O-RING	Oﾘﾝｸﾞ	1	
3	23870-52871		PLUG,SUNK	ﾌﾟﾗｸﾞ	1	
A2	04150-20202		ELBOW-ASSY	ｴﾙﾎﾞｱｯｾﾝ	1	INC.4,5
-	04150-20202		ELBOW-ASSY	ｴﾙﾎﾞｱｯｾﾝ	2	[VLS] INC.4,5
4	NO PART NO.	#	ELBOW	ｴﾙﾎﾞ	1	
-	NO PART NO.	#	ELBOW	ｴﾙﾎﾞ	2	[VLS]
5	03320-00110		O-RING	Oﾘﾝｸﾞ	1	
-	03320-00110		O-RING	Oﾘﾝｸﾞ	2	[VLS]
A3	04150-20404		ELBOW-ASSY	ｴﾙﾎﾞｱｯｾﾝ	1	INC.6,7
6	NO PART NO.	#	ELBOW	ｴﾙﾎﾞ	1	
7	03320-00180		O-RING	Oﾘﾝｸﾞ	1	
A4	277H7-60601		NIPPLE-ASSY	ﾆｯﾌﾟﾙｱｯｾﾝ	2	INC.8,9
8	NO PART NO.	#	NIPPLE	ﾆｯﾌﾟﾙ	2	
9	03320-00140		O-RING	Oﾘﾝｸﾞ	2	

FIG.137 VALVE CONTROL [2SV]

(F7Z373A0) ﾊﾞﾙﾌﾞｺﾝﾄﾛｰﾙ

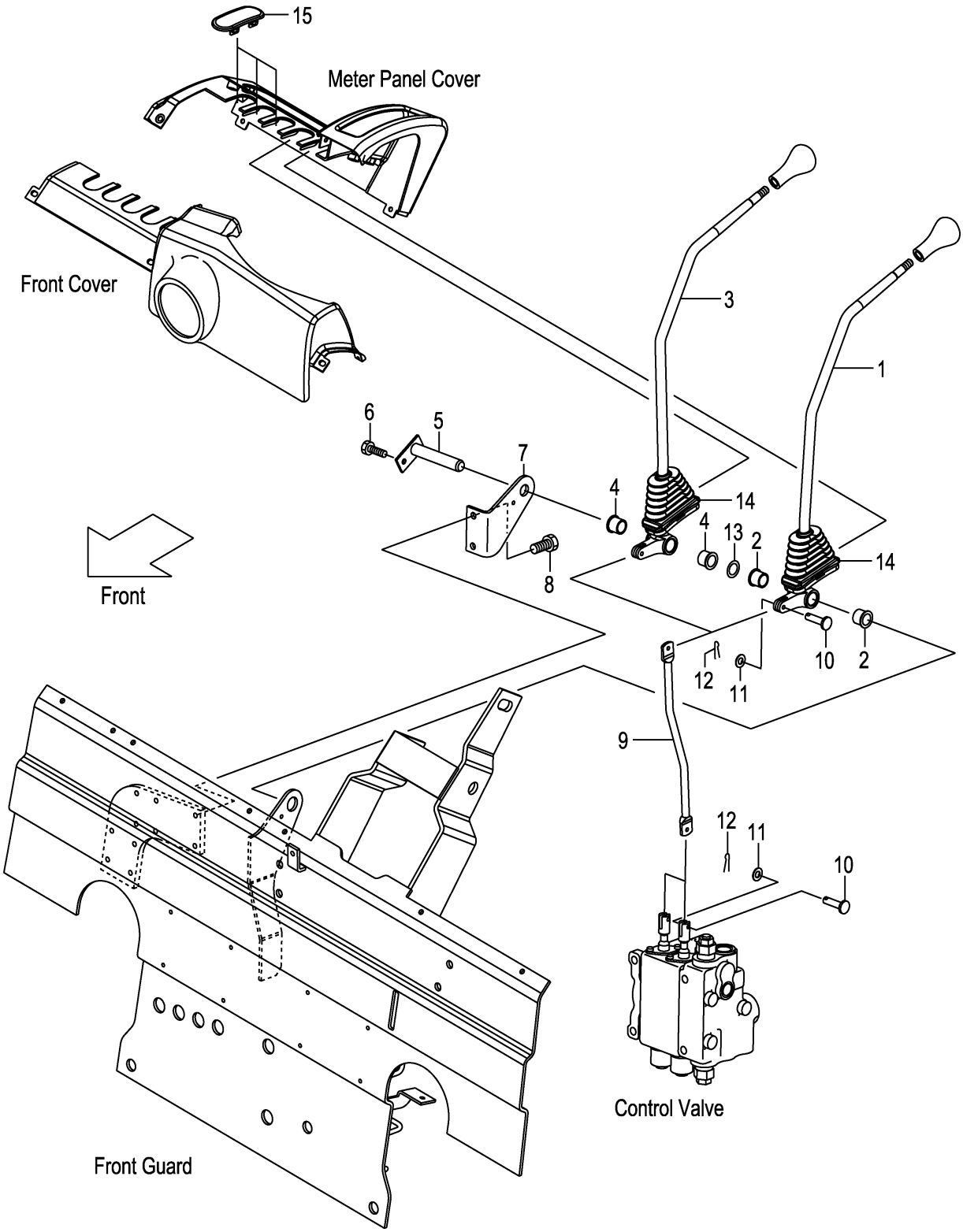

A:FD30C3Z FD30T3Z

Item No	Part No.	Mark	Description		Req'd	Remarks : Serial No.
A1	22N57-40011		LEVER-ASSY,LIFT	ﾘﾌﾄﾚﾊﾞｰｱｯｾﾝ	1	INC.1,2
1	NO PART NO.	#	LEVER,LIFT	ﾚﾊﾞｰ	1	
2	214A7-42071		BUSHING	ﾌﾞｯｼﾝｸﾞ	2	
A2	22N57-40021		LEVER-ASSY,TILT	ﾃｨﾙﾄﾚﾊﾞｰｱｯｾﾝ	1	INC.3,4
3	NO PART NO.	#	LEVER,TILT	ﾚﾊﾞｰ	1	
4	214A7-42071		BUSHING	ﾌﾞｯｼﾝｸﾞ	2	
5	23647-40041		SHAFT,2SV-LEVER	ｼｬﾌﾄ	1	
-	529F3-70401		SHAFT,2SV-LEVER	ｼｬﾌﾄ	1	[FC]
6	01183-06012		BOLT	ﾎﾞﾙﾄ	1	
7	22N57-42001		BRACKET,VALVE-LEVER	ﾌﾞﾗｹｯﾄ	1	
8	01183-08012		BOLT	ﾎﾞﾙﾄ	2	
9	22N57-42101		JOINT	ｼﾞｮｲﾝﾄ	2	
10	22N57-42121		PIN,CLEVIS	ﾋﾟﾝ	4	
11	02000-00005		WASHER	ﾜｯｼｬ	4	
12	02200-16010		PIN,COTTER	ﾋﾟﾝ	4	
13	22517-40051		SHIM,T-0.2	ｼﾑ	3	
14	22N57-42151		BOOT	ﾌﾞｰﾂ	2	
15	22N57-42161		COVER,VALVE-LEVER	ｶﾊﾞｰ	3	

FIG.138 VALVE CONTROL [3SV]

(F7Z373B0) ﾊﾞﾙﾌﾞｺﾝﾄﾛｰﾙ

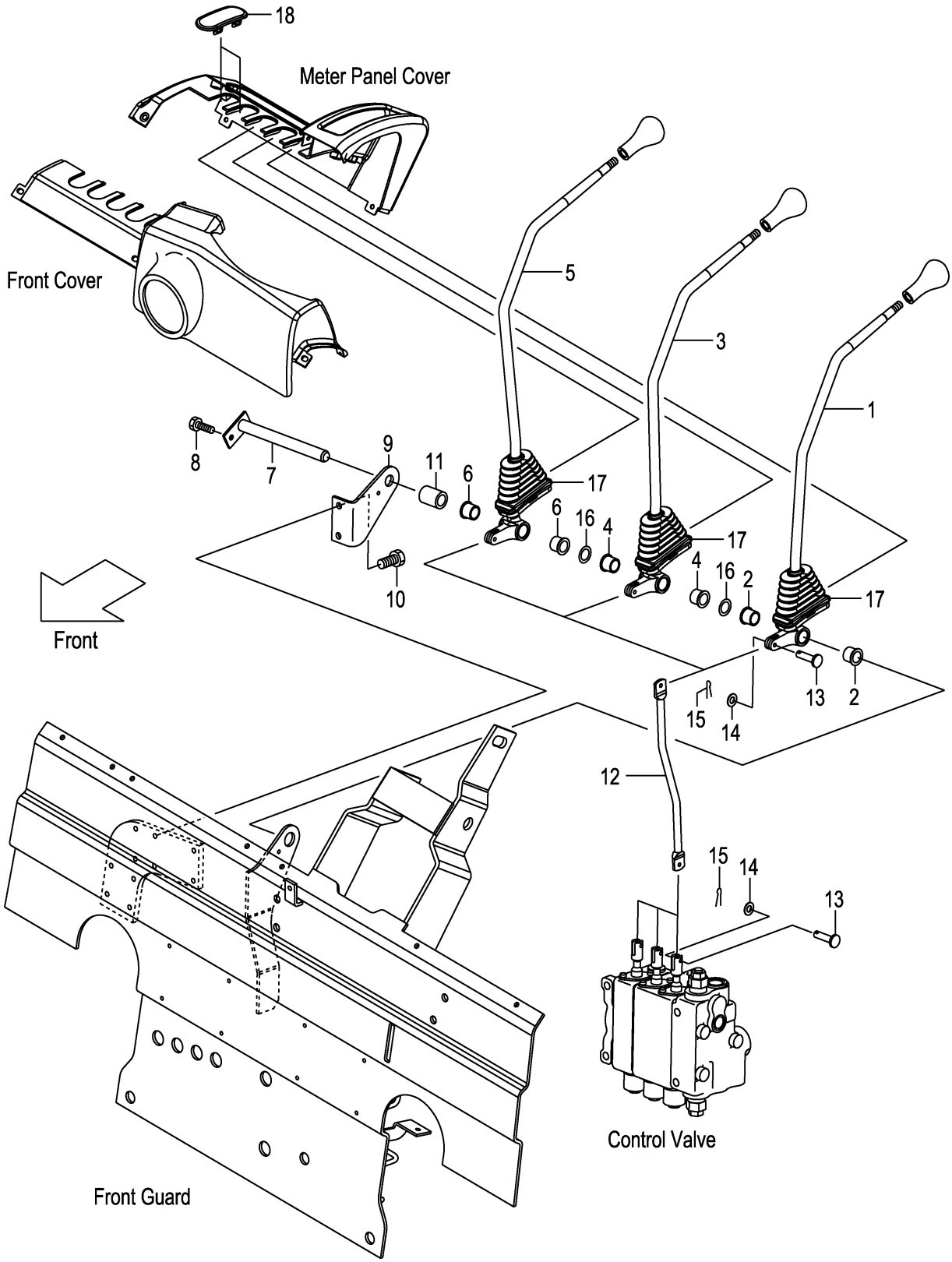

A:FD30C3Z FD30T3Z

Item No	Part No.	Mark	Description		Req'd	Remarks : Serial No.
A1	22N57-40011		LEVER-ASSY,LIFT	ﾘﾌﾄﾚﾊﾞｰｱｯｾﾝ	1	[3SV] INC.1,2
1	NO PART NO.	#	LEVER,LIFT	ﾚﾊﾞｰ	1	[3SV]
2	214A7-42071		BUSHING	ﾌﾞｯｼﾝｸﾞ	2	[3SV]
A2	22N57-40021		LEVER-ASSY,TILT	ﾃｨﾙﾄﾚﾊﾞｰｱｯｾﾝ	1	[3SV] INC.3,4
3	NO PART NO.	#	LEVER,TILT	ﾚﾊﾞｰ	1	[3SV]
4	214A7-42071		BUSHING	ﾌﾞｯｼﾝｸﾞ	2	[3SV]
A3	22N57-40031		LEVER-ASSY,THIRD	ｻｰﾄﾞﾚﾊﾞｰｱｯｾﾝ	1	[3SV] INC.5,6
5	NO PART NO.	#	LEVER,THIRD	ﾚﾊﾞｰ	1	[3SV]
6	214A7-42071		BUSHING	ﾌﾞｯｼﾝｸﾞ	2	[3SV]
7	23457-42041		SHAFT,3&4SV-LEVER	ｼｬﾌﾄ	1	[3SV]
-	529F3-70411		SHAFT,3&4SV-LEVER	ｼｬﾌﾄ	1	[3SV/FC]
8	01183-06012		BOLT	ﾎﾞﾙﾄ	1	[3SV]
9	22N57-42001		BRACKET,VALVE-LEVER	ﾌﾞﾗｹｯﾄ	1	[3SV]
10	01183-08012		BOLT	ﾎﾞﾙﾄ	2	[3SV]
11	23657-42131		COLLAR	ｶﾗｰ	1	[3SV]
12	22N57-42101		JOINT	ｼﾞｮｲﾝﾄ	3	[3SV]
13	22N57-42121		PIN,CLEVIS	ﾋﾟﾝ	6	[3SV]
14	02000-00005		WASHER	ﾜｯｼｬ	6	[3SV]
15	02200-16010		PIN,COTTER	ﾋﾟﾝ	6	[3SV]
16	22517-40051		SHIM,T-0.2	ｼﾑ	6	[3SV]
17	22N57-42151		BOOT	ﾌﾞｰﾂ	3	[3SV]
18	22N57-42161		COVER,VALVE-LEVER	ｶﾊﾞｰ	2	[3SV]

FIG.139 VALVE CONTROL [4SV]

(F7Z373C0) ﾊﾞﾙﾌﾞｺﾝﾄﾛｰﾙ

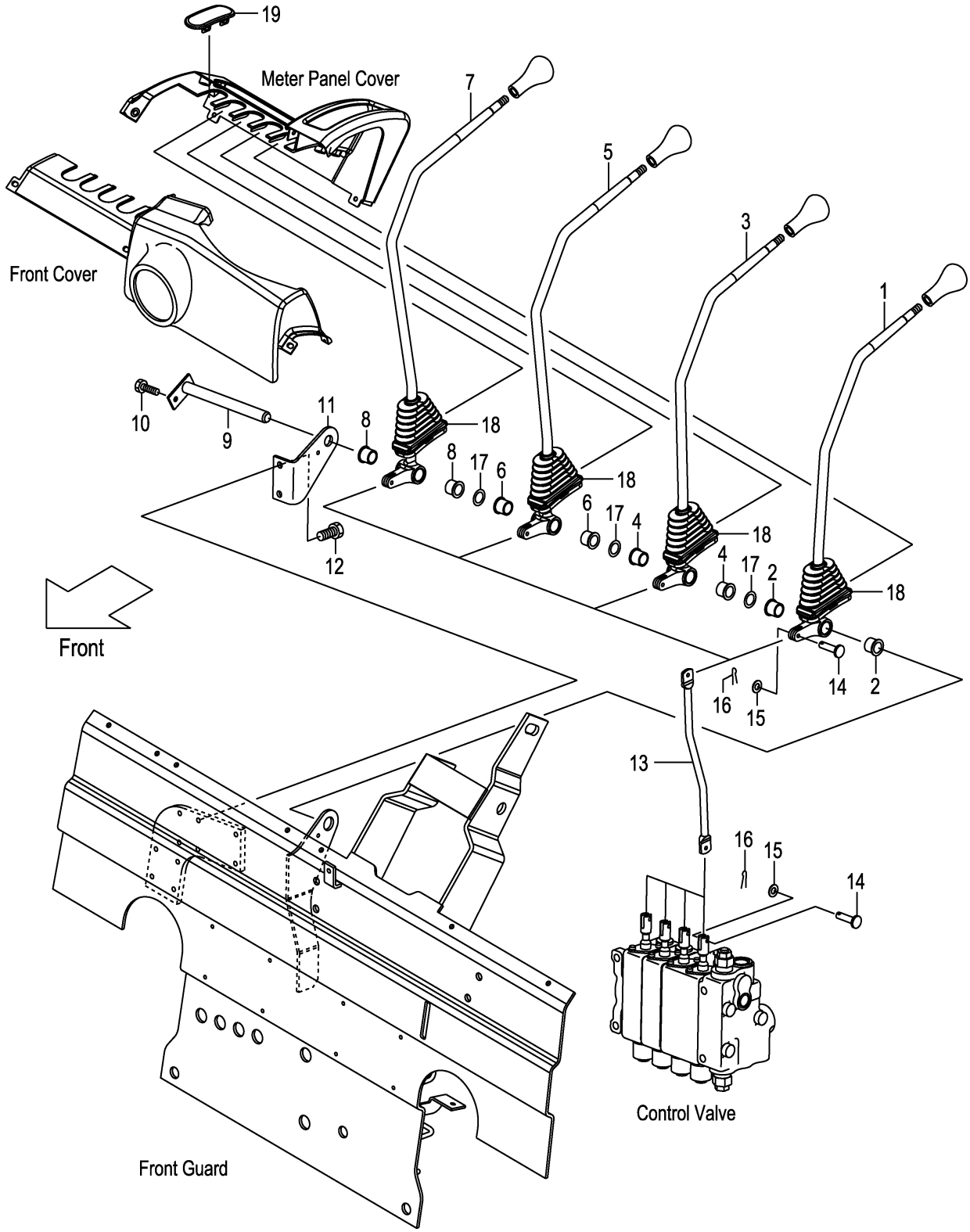

A:FD30C3Z FD30T3Z

Item No	Part No.	Mark	Description		Req'd	Remarks : Serial No.
A1	22N57-40011		LEVER-ASSY,LIFT	ﾘﾌﾄﾚﾊﾞｰｱｯｾﾝ	1	[4SV] INC.1,2
1	NO PART NO.	#	LEVER,LIFT	ﾚﾊﾞｰ	1	[4SV]
2	214A7-42071		BUSHING	ﾌﾞｯｼﾝｸﾞ	2	[4SV]
A2	22N57-40021		LEVER-ASSY,TILT	ﾃｨﾙﾄﾚﾊﾞｰｱｯｾﾝ	1	[4SV] INC.3,4
3	NO PART NO.	#	LEVER,TILT	ﾚﾊﾞｰ	1	[4SV]
4	214A7-42071		BUSHING	ﾌﾞｯｼﾝｸﾞ	2	[4SV]
A3	22N57-40031		LEVER-ASSY,THIRD	ｻｰﾄﾞﾚﾊﾞｰｱｯｾﾝ	1	[4SV] INC.5,6
5	NO PART NO.	#	LEVER,THIRD	ﾚﾊﾞｰ	1	[4SV]
6	214A7-42071		BUSHING	ﾌﾞｯｼﾝｸﾞ	2	[4SV]
A4	22N57-40041		LEVER-ASSY,FOURTH	ﾌｫｰｽﾚﾊﾞｰｱｯｾﾝ	1	[4SV] INC.7,8
7	NO PART NO.	#	LEVER,FOURTH	ﾚﾊﾞｰ	1	[4SV]
8	214A7-42071		BUSHING	ﾌﾞｯｼﾝｸﾞ	2	[4SV]
9	23457-42041		SHAFT,3&4SV-LEVER	ｼｬﾌﾄ	1	[4SV]
-	529F3-70411		SHAFT,3&4SV-LEVER	ｼｬﾌﾄ	1	[4SV/FC]
10	01183-06012		BOLT	ﾎﾞﾙﾄ	1	[4SV]
11	22N57-42001		BRACKET,VALVE-LEVER	ﾌﾞﾗｹｯﾄ	1	[4SV]
12	01183-08012		BOLT	ﾎﾞﾙﾄ	2	[4SV]
13	22N57-42101		JOINT	ｼﾞｮｲﾝﾄ	4	[4SV]
14	22N57-42121		PIN,CLEVIS	ﾋﾟﾝ	8	[4SV]
15	02000-00005		WASHER	ﾜｯｼｬ	8	[4SV]
16	02200-16010		PIN,COTTER	ﾋﾟﾝ	8	[4SV]
17	22517-40051		SHIM,T-0.2	ｼﾑ	9	[4SV]
18	22N57-42151		BOOT	ﾌﾞｰﾂ	4	[4SV]
19	22N57-42161		COVER,VALVE-LEVER	ｶﾊﾞｰ	1	[4SV]

FIG.140 VALVE CONTROL [5SV]

(F7Z373D0) ﾊﾞﾙﾌﾞｺﾝﾄﾛｰﾙ

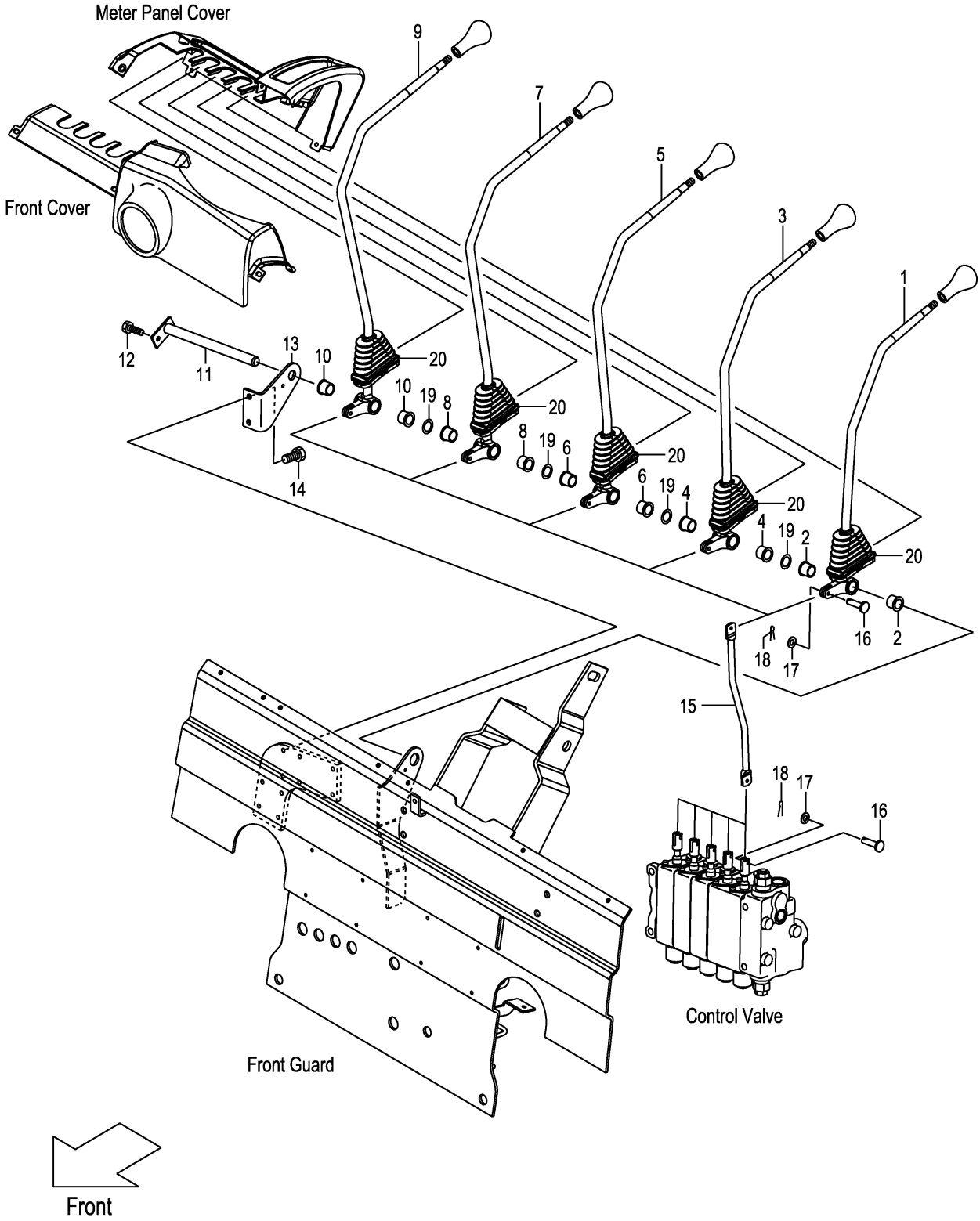

A:FD30C3Z FD30T3Z

Item No	Part No.	Mark	Description		Req'd	Remarks : Serial No.
A1	22N57-40011		LEVER-ASSY,LIFT	ﾘﾌﾄﾚﾊﾞｰｱｯｾﾝ	1	[5SV] INC.1,2
1	NO PART NO.	#	LEVER,LIFT	ﾚﾊﾞｰ	1	[5SV]
2	214A7-42071		BUSHING	ﾌﾞｯｼﾝｸﾞ	2	[5SV]
A2	22N57-40021		LEVER-ASSY,TILT	ﾃｨﾙﾄﾚﾊﾞｰｱｯｾﾝ	1	[5SV] INC.3,4
3	NO PART NO.	#	LEVER,TILT	ﾚﾊﾞｰ	1	[5SV]
4	214A7-42071		BUSHING	ﾌﾞｯｼﾝｸﾞ	2	[5SV]
A3	22N57-40031		LEVER-ASSY,THIRD	ｻｰﾄﾞﾚﾊﾞｰｱｯｾﾝ	1	[5SV] INC.5,6
5	NO PART NO.	#	LEVER,THIRD	ﾚﾊﾞｰ	1	[5SV]
6	214A7-42071		BUSHING	ﾌﾞｯｼﾝｸﾞ	2	[5SV]
A4	22N57-40041		LEVER-ASSY,FOURTH	ﾌｫｰｽﾚﾊﾞｰｱｯｾﾝ	1	[5SV] INC.7,8
7	NO PART NO.	#	LEVER,FOURTH	ﾚﾊﾞｰ	1	[5SV]
8	214A7-42071		BUSHING	ﾌﾞｯｼﾝｸﾞ	2	[5SV]
A5	22N57-40051		LEVER-ASSY,FIFTH	ﾌｨﾌｽﾚﾊﾞｰｱｯｾﾝ	1	[5SV] INC.9,10
9	NO PART NO.	#	LEVER,FIFTH	ﾚﾊﾞｰ	1	[5SV]
10	214A7-42071		BUSHING	ﾌﾞｯｼﾝｸﾞ	2	[5SV]
11	55593-02371		SHAFT,5SV-LEVER	ｼｬﾌﾄ	1	[5SV]
-	529F3-70421		SHAFT,5SV-LEVER	ｼｬﾌﾄ	1	[5SV/FC]
12	01183-06012		BOLT	ﾎﾞﾙﾄ	1	[5SV]
13	22N57-42001		BRACKET,VALVE-LEVER	ﾌﾞﾗｹｯﾄ	1	[5SV]
14	01183-08012		BOLT	ﾎﾞﾙﾄ	2	[5SV]
15	22N57-42101		JOINT	ｼﾞｮｲﾝﾄ	5	[5SV]
16	22N57-42121		PIN,CLEVIS	ﾋﾟﾝ	10	[5SV]
17	02000-00005		WASHER	ﾜｯｼｬ	10	[5SV]
18	02200-16010		PIN,COTTER	ﾋﾟﾝ	10	[5SV]
19	22517-40051		SHIM,T-0.2	ｼﾑ	12	[5SV]
20	22N57-42151		BOOT	ﾌﾞｰﾂ	5	[5SV]

FIG.141 VALVE CONTROL KNOB

(F7Z373E0) ﾊﾞﾙﾌﾞｺﾝﾄﾛｰﾙﾉﾌﾞ

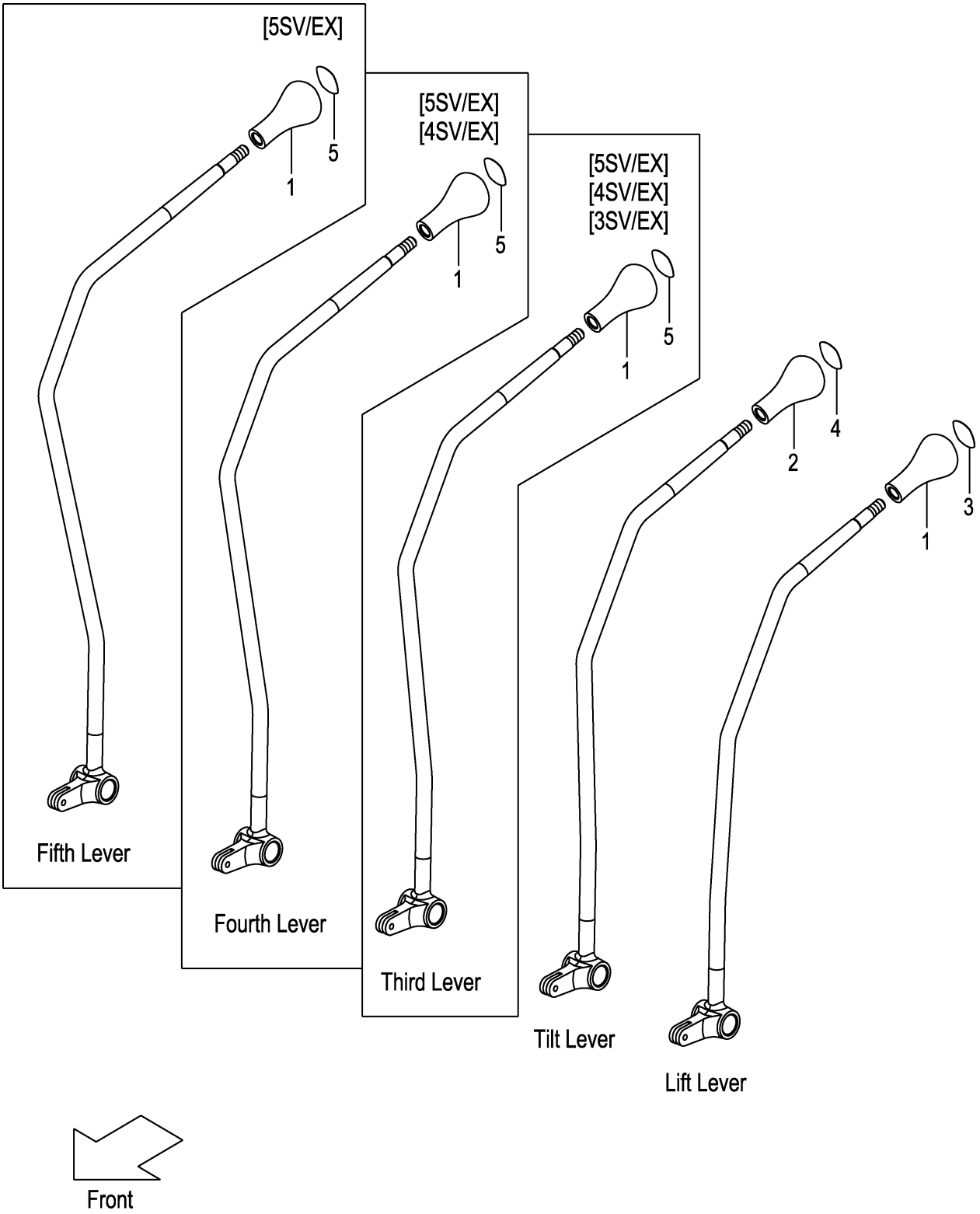

A:FD30C3Z FD30T3Z

Item No	Part No.	Mark	Description	Req'd	Remarks : Serial No.
1	214A7-42181		KNOB,VALVE-LEVER ﾉﾌﾞ	1	
-	214A7-42181		KNOB,VALVE-LEVER ﾉﾌﾞ	2	[3SV/EX]
-	214A7-42181		KNOB,VALVE-LEVER ﾉﾌﾞ	3	[4SV/EX]
-	214A7-42181		KNOB,VALVE-LEVER ﾉﾌﾞ	4	[5SV/EX]
2	281E7-42101		KNOB,VALVE-LEVER ﾉﾌﾞ	1	
3	214A7-42191		DECAL,SYMBOL,LIFT ﾃﾞｶﾙ	1	
4	214A7-42201		DECAL,SYMBOL,TILT ﾃﾞｶﾙ	1	
5	514A2-72411		DECAL,SYMBOL,SPACE ﾃﾞｶﾙ	1	[3SV/EX]
-	514A2-72411		DECAL,SYMBOL,SPACE ﾃﾞｶﾙ	2	[4SV/EX]
-	514A2-72411		DECAL,SYMBOL,SPACE ﾃﾞｶﾙ	3	[5SV/EX]

FIG.142 HYDRAULIC LINE (MAIN)(1/4)

(F7Z37630) ﾊｲﾄﾞﾛﾘｯｸﾗｲﾝ(ﾒｲﾝ)(1/4)

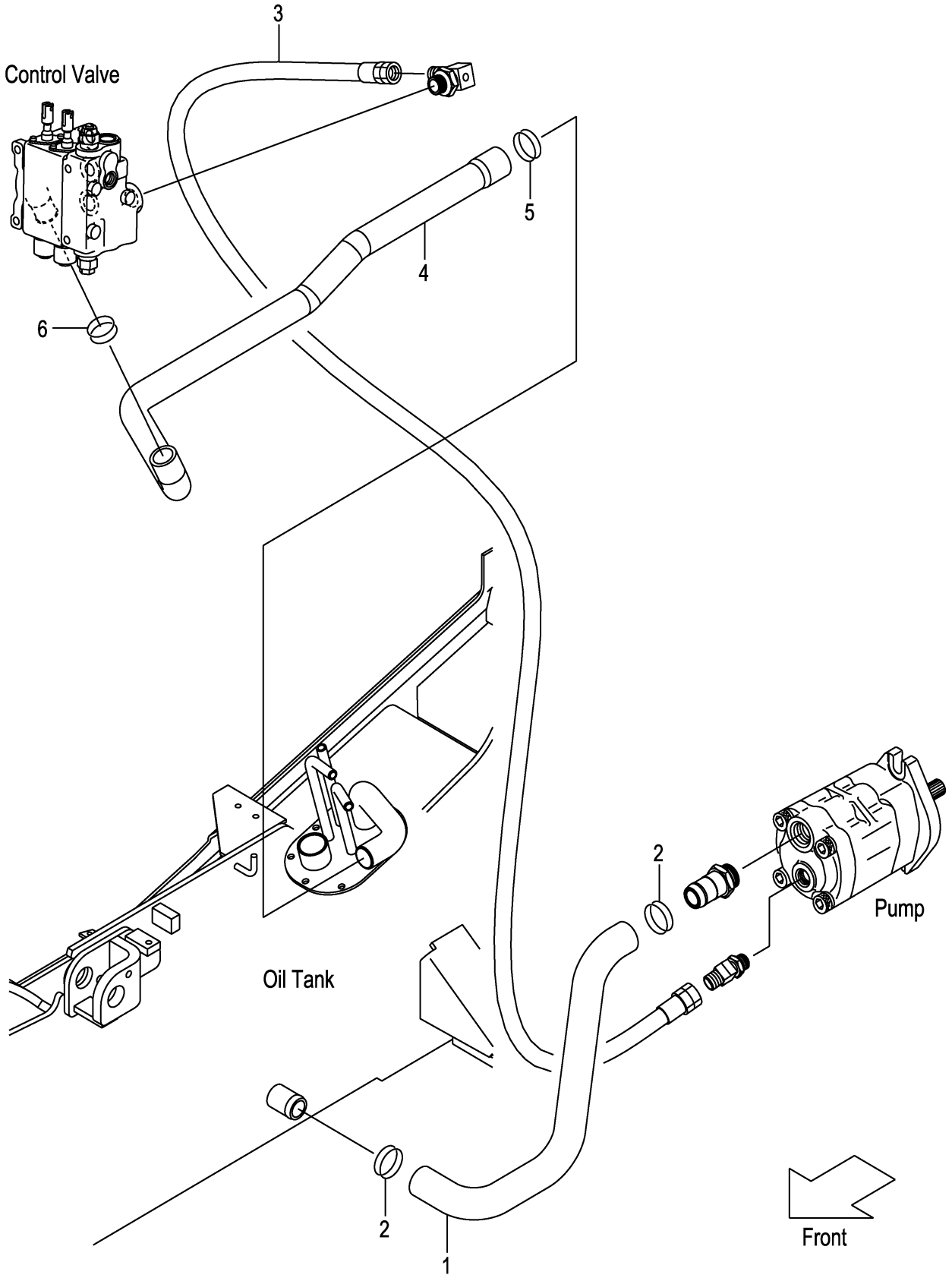

FIG.142

(F7Z37630)

A:FD30C3Z FD30T3Z

Item No	Part No.	Mark	Description		Req'd	Remarks : Serial No.
1	22U57-62001		HOSE,SUCTION	ﾎｰｽ	1	
2	04911-00046		CLIP	ｸﾘｯﾌﾟ	2	
3	22N57-63001		HOSE	ﾎｰｽ	1	1-109
-	04691-04123		HOSE	ﾎｰｽ	1	110-
4	22N57-62101		HOSE,RETURN	ﾎｰｽ	1	
-	22N57-62201		HOSE,RETURN	ﾎｰｽ	1	[4SV][5SV]
5	04911-00044		CLIP	ｸﾘｯﾌﾟ	1	1-109
-	04911-00042		CLIP	ｸﾘｯﾌﾟ	1	110-
6	04911-00040		CLIP	ｸﾘｯﾌﾟ	1	

FIG.143 HYDRAULIC LINE (MAIN)(2/4)

(F7Z37650) ﾊｲﾄﾞﾛﾘｯｸﾗｲﾝ(ﾒｲﾝ)(2/4)

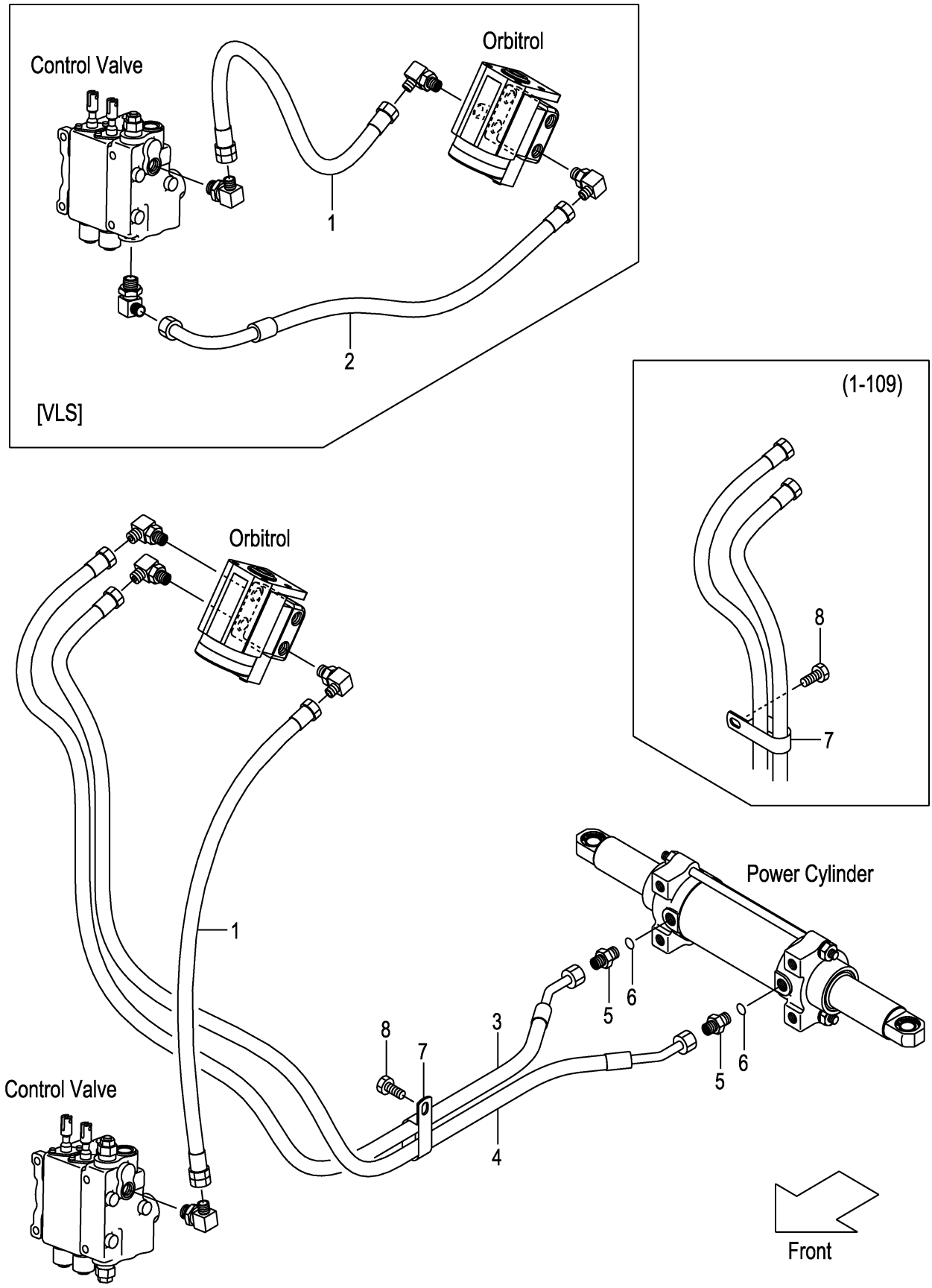

A:FD30C3Z FD30T3Z

Item No	Part No.	Mark	Description		Req'd	Remarks : Serial No.
1	04691-02035		HOSE	ﾎｰｽ	1	1-109
-	04691-02038		HOSE	ﾎｰｽ	1	110-
-	04691-02035		HOSE	ﾎｰｽ	1	[VLS]
2	22N57-62801		HOSE	ﾎｰｽ	1	[VLS]
3	22N97-62381		HOSE,PS,FRONT	ﾎｰｽ	1	
4	22N97-62391		HOSE,PS,FRONT	ﾎｰｽ	1	
A1	04134-20303		NIPPLE-ASSY	ﾆｯﾌﾟﾙｱｯｾﾝ	2	INC.5,6
5	NO PART NO.	#	NIPPLE	ﾆｯﾌﾟﾙ	2	
6	03320-00140		O-RING	Oﾘﾝｸﾞ	2	
7	26602-42221		CLIP	ｸﾘｯﾌﾟ	2	1-109
-	26602-42221		CLIP	ｸﾘｯﾌﾟ	1	110-
8	01185-08016		BOLT	ﾎﾞﾙﾄ	2	1-109
-	01185-08016		BOLT	ﾎﾞﾙﾄ	1	110-

FIG.144 HYDRAULIC LINE (MAIN)(3/4)

(F7Z37660) ﾊｲﾄﾞﾛﾘｯｸﾗｲﾝ(ﾒｲﾝ)(3/4)

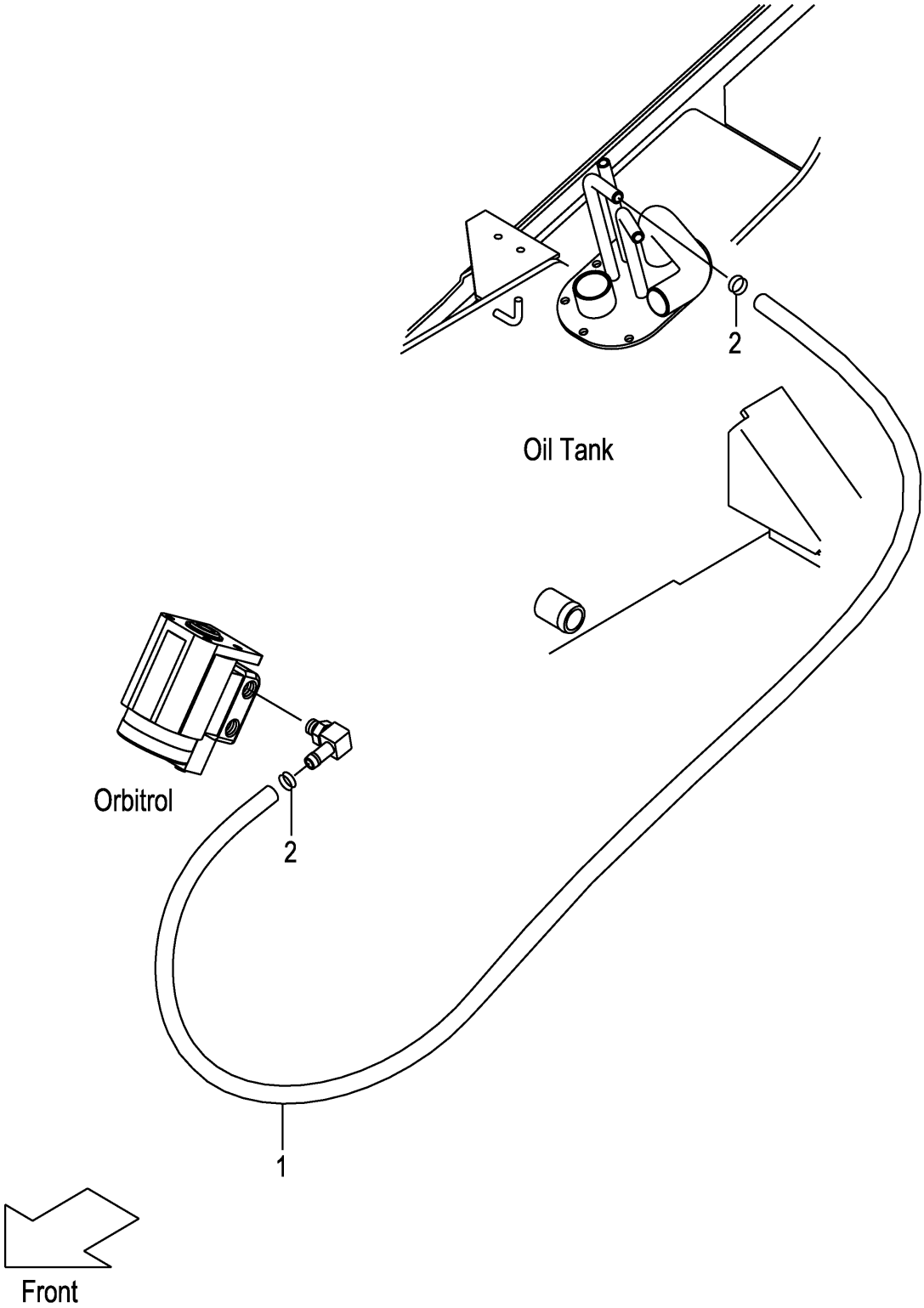

FIG.144

(F7Z37660)

A:FD30C3Z FD30T3Z

Item No	Part No.	Mark	Description	Req'd	Remarks : Serial No.
1	04710-04190		HOSE ﾎｰｽ	1	
2	04911-00020		CLIP ｸﾘｯﾌﾟ	2	

FIG.145 HYDRAULIC LINE (MAIN)(4/4)

(F7Z37690) ﾊｲﾄﾞﾛﾘｯｸﾗｲﾝ(ﾒｲﾝ)(4/4)

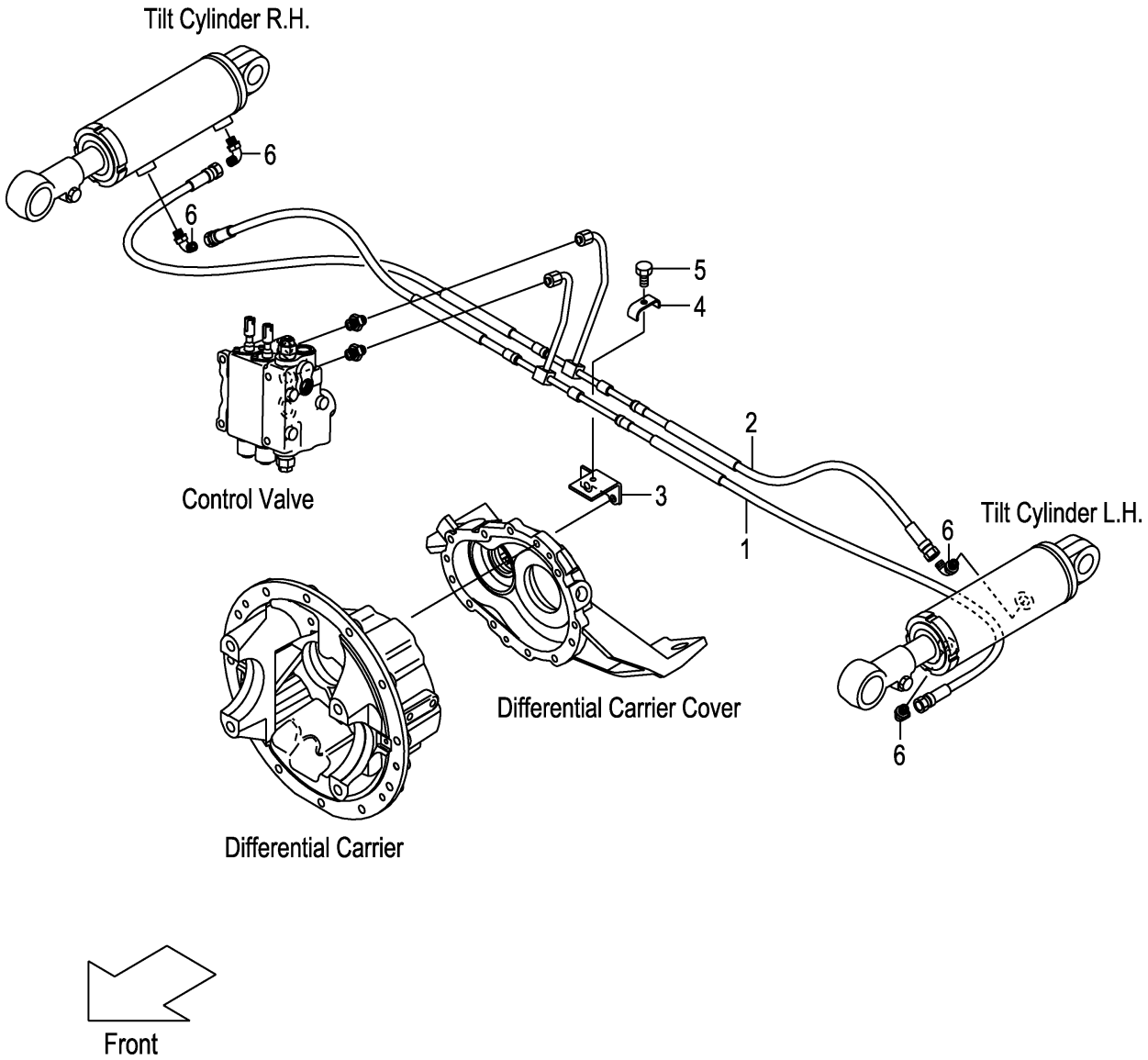

FIG.145

(F7Z37690)

A:FD30C3Z FD30T3Z

Item No	Part No.	Mark	Description		Req'd	Remarks : Serial No.
1	22N57-62401		HOSE,TILT,FRONT	ﾎｰｽ	1	
2	22N57-62451		HOSE,TILT,REAR	ﾎｰｽ	1	
3	22N57-62531		BRACKET,TILT-PIPE	ﾌﾞﾗｹｯﾄ	1	
4	281E7-62041		CLIP,HOSE	ｸﾘｯﾌﾟ	1	
5	01183-08025		BOLT	ﾎﾞﾙﾄ	1	
6	22N57-62221		ELBOW	ｴﾙﾎﾞ	4	

FIG.146 HYDRAULIC LINE (TOR-CON)

(F7Z376A0) ﾊｲﾄﾞﾛﾘｯｸﾗｲﾝ(ﾄﾙｺﾝ)

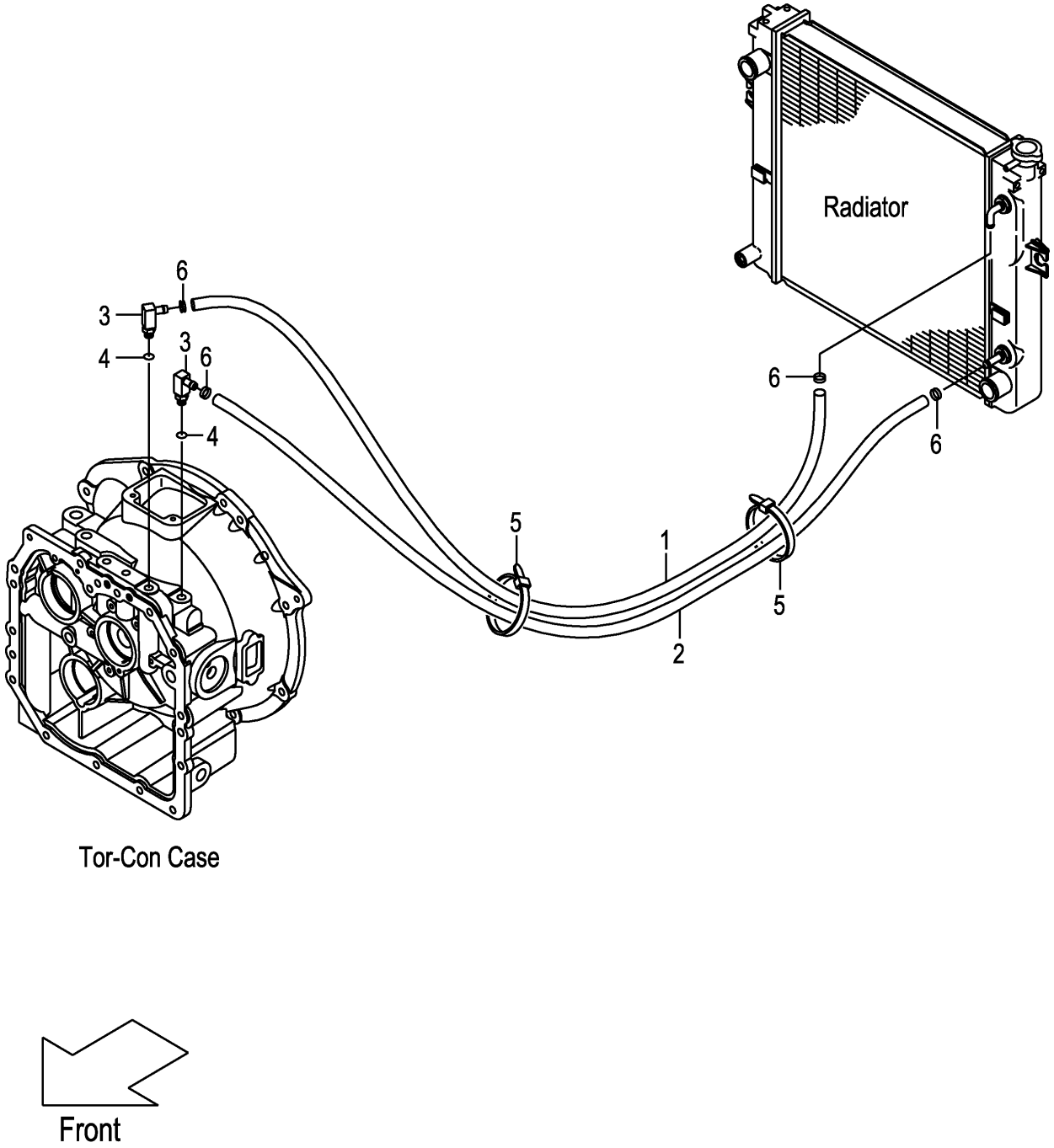

FIG.146
(F7Z376A0)

A:FD30T3Z

Item No	Part No.	Mark	Description		Req'd	Remarks : Serial No.
1	216H7-82111		HOSE,OIL-COOLER	ﾎｰｽ	1	
2	22S57-82001		HOSE,OIL-COOLER	ﾎｰｽ	1	
A1	22N57-80201		FITTING-ASSY,HOSE	ﾎｰｽﾌｨｯﾃｨﾝｸﾞｱｯｾﾝ	2	INC.3,4
3	NO PART NO.	#	FITTING,HOSE	ﾌｨｯﾃｨﾝｸﾞ	2	
4	03320-00140		O-RING	Oﾘﾝｸﾞ	2	
5	27042-42322		BAND	ﾊﾞﾝﾄﾞ	2	
6	04911-00023		CLIP	ｸﾘｯﾌﾟ	4	

FIG.147 TILT CYLINDER

(F7Z38510) ﾃｨﾙﾄｼﾘﾝﾀﾞ

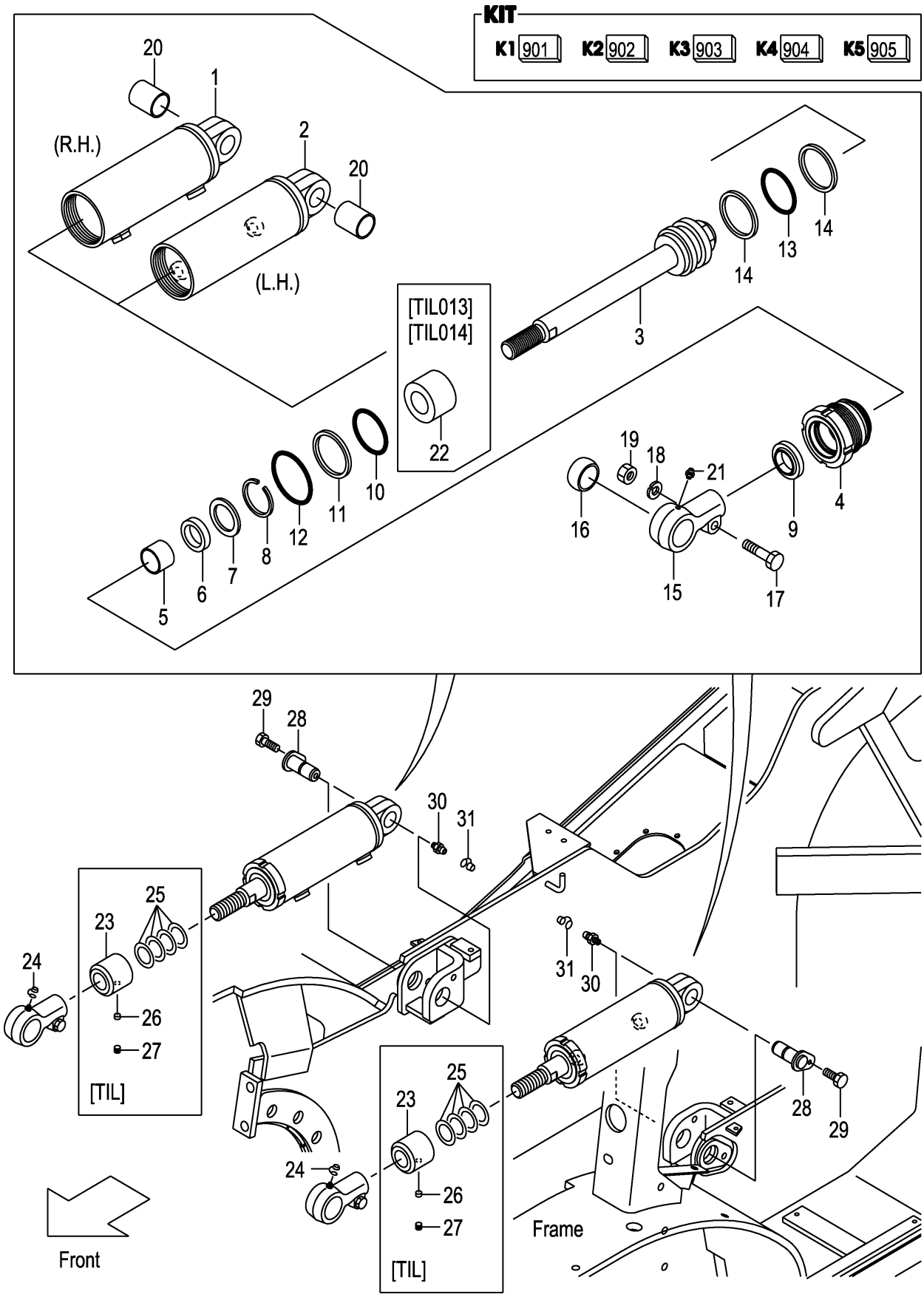

A:FD30C3Z FD30T3Z

Item No	Part No.	Mark	Description		Req'd	Remarks : Serial No.
A1	22N58-50101		CYL-ASSY,TILT,RH	ﾃｨﾙﾄｼﾘﾝﾀﾞｱｯｾﾝ	1	(6-12 DEG.) INC.1,3-21
-	22N58-50131		CYL-ASSY,TILT,RH	ﾃｨﾙﾄｼﾘﾝﾀﾞｱｯｾﾝ	1	[TIL013](3-3 DEG.) INC.1,3-23
-	22N58-50121		CYL-ASSY,TILT,RH	ﾃｨﾙﾄｼﾘﾝﾀﾞｱｯｾﾝ	1	[TIL014](3-6 DEG.) INC.1,3-23
-	22N58-50111		CYL-ASSY,TILT,RH	ﾃｨﾙﾄｼﾘﾝﾀﾞｱｯｾﾝ	1	[TIL016](6-6 DEG.) INC.1,3-21,23
-	22N58-50141		CYL-ASSY,TILT,RH	ﾃｨﾙﾄｼﾘﾝﾀﾞｱｯｾﾝ	1	[TIL017](6-10 DEG.) INC.1,3-21,23
A2	22N58-50201		CYL-ASSY,TILT,LH	ﾃｨﾙﾄｼﾘﾝﾀﾞｱｯｾﾝ	1	(6-12 DEG.) INC.2-21
-	22N58-50231		CYL-ASSY,TILT,LH	ﾃｨﾙﾄｼﾘﾝﾀﾞｱｯｾﾝ	1	[TIL013](3-3 DEG.) INC.2-23
-	22N58-50221		CYL-ASSY,TILT,LH	ﾃｨﾙﾄｼﾘﾝﾀﾞｱｯｾﾝ	1	[TIL014](3-6 DEG.) INC.2-23
-	22N58-50211		CYL-ASSY,TILT,LH	ﾃｨﾙﾄｼﾘﾝﾀﾞｱｯｾﾝ	1	[TIL016](6-6 DEG.) INC.2-21,23
-	22N58-50241		CYL-ASSY,TILT,LH	ﾃｨﾙﾄｼﾘﾝﾀﾞｱｯｾﾝ	1	[TIL017](6-10 DEG.) INC.2-21,23
901	22N58-52921	K1	KIT,REPAIR,CYL	ﾘﾍﾟｱｷｯﾄ	2	INC.6,9-14
902	22N58-52901	K2	KIT,CYL-BODY,RH	ｼﾘﾝﾀﾞﾎﾞﾃﾞｨｷｯﾄ	1	INC.1,20
903	22N58-52911	K3	KIT,CYL-BODY,LH	ｼﾘﾝﾀﾞﾎﾞﾃﾞｨｷｯﾄ	1	INC.2,20
904	22N58-52931	K4	KIT,ROD-HEAD	ﾛｯﾄﾞﾍｯﾄﾞｷｯﾄ	2	INC.15,16
905	22N58-52941	K5	KIT,CYL-HEAD	ｼﾘﾝﾀﾞﾍｯﾄﾞｷｯﾄ	2	INC.4,5
1	NO PART NO.	#*	BODY,CYL,RH	ﾎﾞﾃﾞｨ	1	
2	NO PART NO.	#*	BODY,CYL,LH	ﾎﾞﾃﾞｨ	1	
3	22N58-52801		ROD,PISTON	ﾛｯﾄﾞ	2	
4	NO PART NO.	#*	HEAD,CYL	ﾍｯﾄﾞ	2	
5	NO PART NO.	#*	BUSHING	ﾌﾞｯｼﾝｸﾞ	2	
6	NO PART NO.	#*	U-RING	Uﾘﾝｸﾞ	2	
7	22N58-52811		SPACER	ｽﾍﾟｰｻ	2	
8	22N58-52821		RING,SNAP	ｽﾅｯﾌﾟﾘﾝｸﾞ	2	
9	NO PART NO.	#*	RING,WIPER	ﾘﾝｸﾞ	2	
10	NO PART NO.	#*	O-RING	Oﾘﾝｸﾞ	2	
11	NO PART NO.	#*	RING,BACK-UP	ﾘﾝｸﾞ	2	
12	NO PART NO.	#*	O-RING	Oﾘﾝｸﾞ	2	
13	NO PART NO.	#*	O-RING	Oﾘﾝｸﾞ	2	
14	NO PART NO.	#*	RING,BACK-UP	ﾘﾝｸﾞ	4	
15	NO PART NO.	#*	HEAD,ROD	ﾍｯﾄﾞ	2	
16	NO PART NO.	#*	BUSHING,PIN	ﾌﾞｯｼﾝｸﾞ	2	
17	22N58-52831		BOLT	ﾎﾞﾙﾄ	2	
18	22N58-52841		WASHER	ﾜｯｼｬ	2	
19	22N58-52851		NUT	ﾅｯﾄ	2	
20	NO PART NO.	#*	BUSHING,PIN	ﾌﾞｯｼﾝｸﾞ	2	
21	22N58-52861		NIPPLE,GREASE	ﾆｯﾌﾟﾙ	2	
22	22N58-52871		SPACER	ｽﾍﾟｰｻ	2	[TIL013][TIL014] (3-3,3-6 DEG.)
23	22N58-52111		SPACER	ｽﾍﾟｰｻ	2	[TIL013](3-3 DEG.)
-	22N58-52101		SPACER	ｽﾍﾟｰｻ	2	[TIL014][TIL016] (3-6,6-6 DEG.)
-	22N58-52121		SPACER	ｽﾍﾟｰｻ	2	[TIL017](6-10 DEG.)
24	22199-12401		CAP,NIPPLE	ｷｬｯﾌﾟ	2	
25	23658-52101		SHIM	ｼﾑ	8	[TIL013][TIL014] (3-3,3-6 DEG.)
-	23658-52101		SHIM	ｼﾑ	8	[TIL016][TIL017] (6-6,6-10 DEG.)

FIG.147 TILT CYLINDER

(F7Z38510) ﾃｨﾙﾄｼﾘﾝﾀﾞ

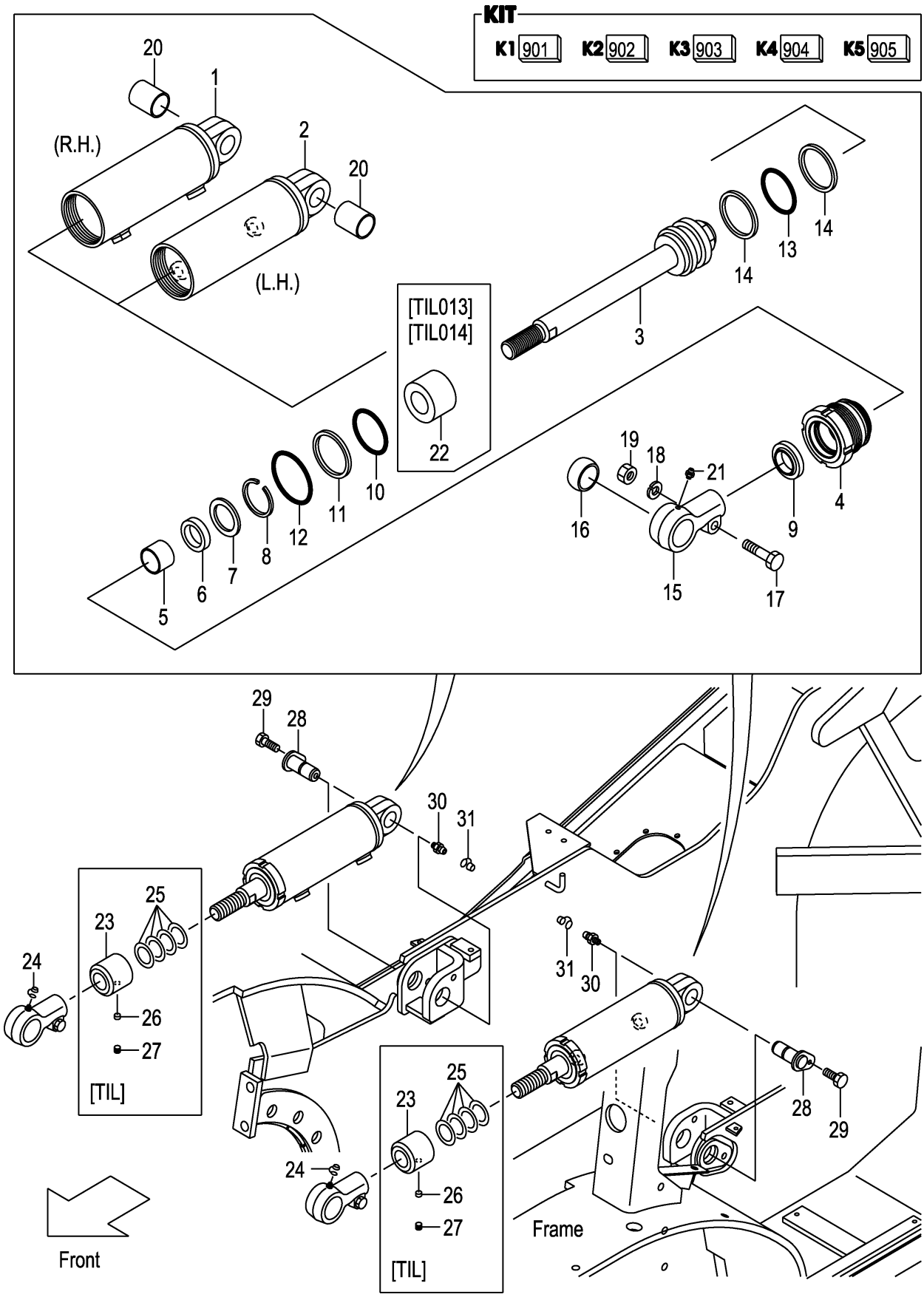

A:FD30C3Z FD30T3Z

Item No	Part No.	Mark	Description		Req'd	Remarks : Serial No.
26	01066-10012		SCREW,SET	ｽｸﾘｭ	2	[TIL013][TIL014] (3-3,3-6 DEG.)
-	01066-10012		SCREW,SET	ｽｸﾘｭ	2	[TIL016][TIL017] (6-6,6-10 DEG.)
27	23658-52401		PLUG,NYLON	ﾌﾟﾗｸﾞ	2	[TIL013][TIL014] (3-3,3-6 DEG.)
-	23658-52401		PLUG,NYLON	ﾌﾟﾗｸﾞ	2	[TIL016][TIL017] (6-6,6-10 DEG.)
28	22N58-52301		PIN	ﾋﾟﾝ	2	
29	01186-10016		BOLT	ﾎﾞﾙﾄ	2	
30	04901-00100		FITTING	ﾌｨｯﾃｨﾝｸﾞ	2	
31	22199-12401		CAP,NIPPLE	ｷｬｯﾌﾟ	2	

M E M O

M E M O

FIG.148 TILT BOOT [TLB][FC]

(F7Z38520) ﾃｨﾙﾄﾌﾞｰﾂ

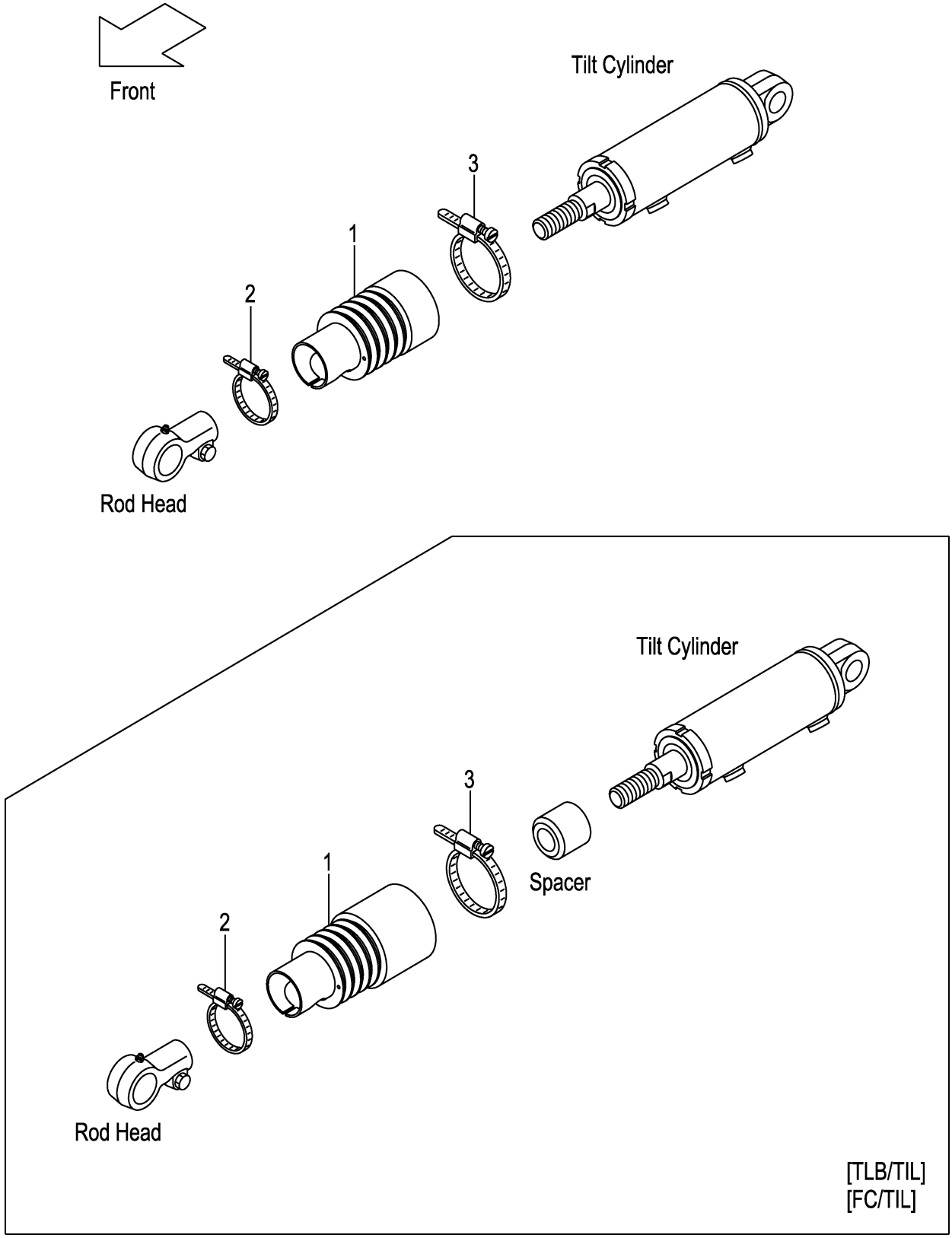

A:FD30C3Z FD30T3Z

Item No	Part No.	Mark	Description		Req'd	Remarks : Serial No.
A1	22N58-50301		BOOT-ASSY,TILT-CYL	ﾃｨﾙﾄｼﾘﾝﾀﾞﾌﾞｰﾂｱｯｾﾝ	2	[TLB][FC](6-12 DEG.) INC.1-3
-	22N58-50311		BOOT-ASSY,TILT-CYL	ﾃｨﾙﾄｼﾘﾝﾀﾞﾌﾞｰﾂｱｯｾﾝ	2	[TLB/TIL013&014] (3-3,3-6 DEG.) INC.1-3
-	22N58-50311		BOOT-ASSY,TILT-CYL	ﾃｨﾙﾄｼﾘﾝﾀﾞﾌﾞｰﾂｱｯｾﾝ	2	[TLB/TIL016&017] (6-6,6-10 DEG.) INC.1-3
-	22N58-50311		BOOT-ASSY,TILT-CYL	ﾃｨﾙﾄｼﾘﾝﾀﾞﾌﾞｰﾂｱｯｾﾝ	2	[FC/TIL013&014](3-3,3-6 DEG.) INC.1-3
-	22N58-50311		BOOT-ASSY,TILT-CYL	ﾃｨﾙﾄｼﾘﾝﾀﾞﾌﾞｰﾂｱｯｾﾝ	2	[FC/TIL016&017] (6-6,6-10 DEG.) INC.1-3
1	22N58-53001		BOOT,TILT-CYL	ﾌﾞｰﾂ	2	[TLB][FC](6-12 DEG.)
-	22N58-53101		BOOT,TILT-CYL	ﾌﾞｰﾂ	2	[TLB/TIL013&014] [FC/TIL013&014](3-3,3-6 DEG.)
-	22N58-53101		BOOT,TILT-CYL	ﾌﾞｰﾂ	2	[TLB/TIL016&017] [FC/TIL016&017] (6-6,6-10 DEG.)
2	216G8-53001		BAND,50	ﾊﾞﾝﾄﾞ	2	[TLB][FC]
-	216G8-53011		BAND,55	ﾊﾞﾝﾄﾞ	(2)	[TLB][FC]
3	224T8-53021		BAND,115	ﾊﾞﾝﾄﾞ	2	[TLB][FC]

FIG.149 DECAL (1/2)

(F7Z39110) ﾃﾞｶﾙ(1/2)

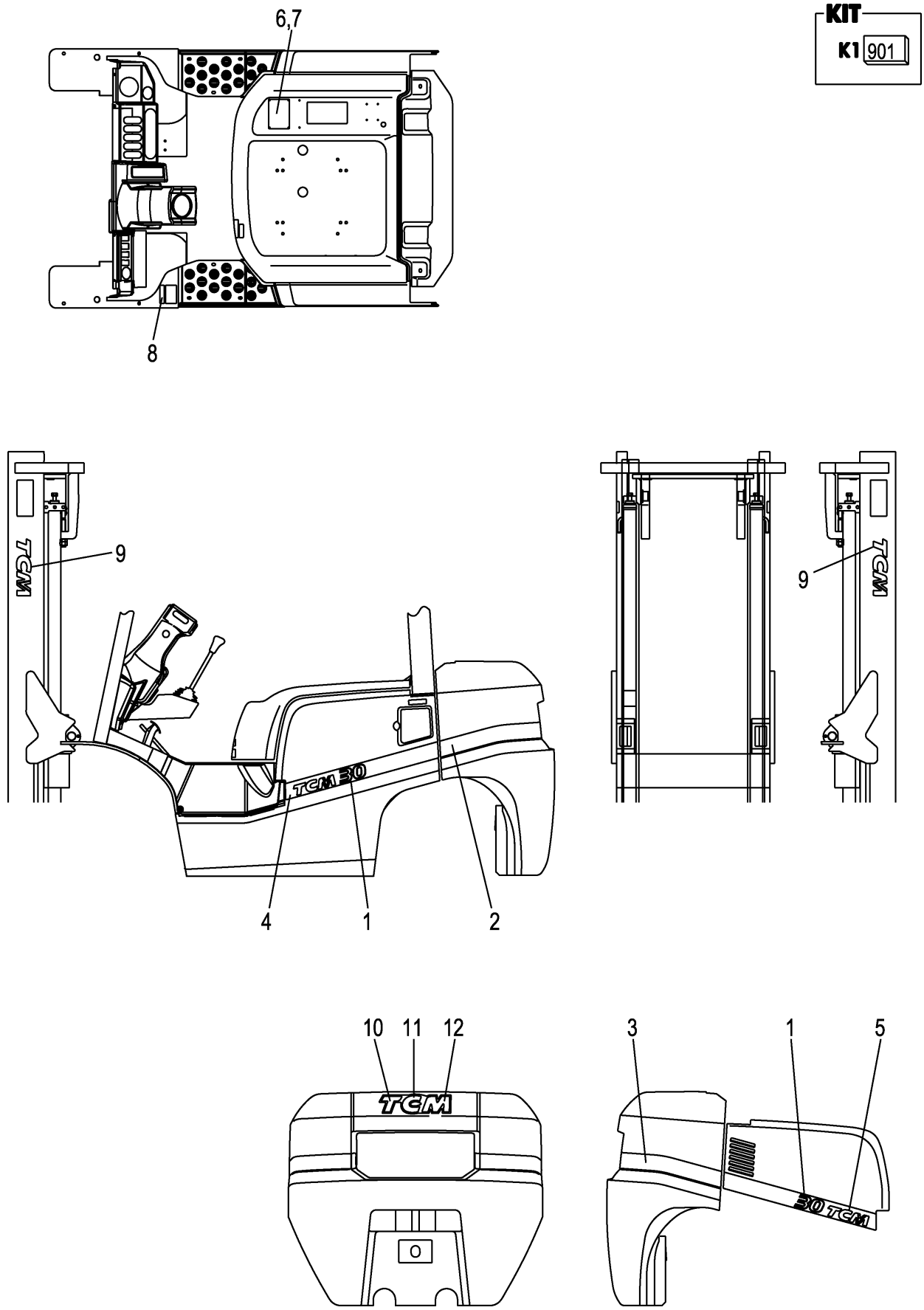

A:FD30C3Z FD30T3Z

Item No	Part No.	Mark	Description		Req'd	Remarks : Serial No.
901	C-11452-2N5-D	K1	KIT,DECAL,JPN	ﾃﾞｶﾙｷｯﾄ	1	INC.8,9,FIG.150:3-15
-	C-11452-2N0-E	K1	KIT,DECAL,ENGLISH	ﾃﾞｶﾙｷｯﾄ	1	[EXB/ENGLISH]
						INC.8,9,FIG.151:3-11,14-21
-	C-11452-2N0-C	K1	KIT,DECAL,CHINESE	ﾃﾞｶﾙｷｯﾄ	1	[EXB/CHINESE]
						INC.8,9,FIG.151:3-19,21
1	22N99-12281		DECAL,MODEL-MARK,30	ﾃﾞｶﾙ	2	
2	22N99-12151		LINE,WEIGHT,LH	ﾗｲﾝ	1	
-	22N99-12171		LINE,WEIGHT,LH	ﾗｲﾝ	1	[ATF]
3	22N99-12161		LINE,WEIGHT,RH	ﾗｲﾝ	1	
-	22N99-12181		LINE,WEIGHT,RH	ﾗｲﾝ	1	[ATF]
4	22N59-12101		LINE,COVER,LH	ﾗｲﾝ	1	
5	22N59-12111		LINE,COVER,RH	ﾗｲﾝ	1	
6	22N99-12601		CHART,CAPACITY,3.0T	ﾁｬｰﾄ	1	(VM200-500)
-	222Q9-12011		CHART,CAPACITY,3.0T	ﾁｬｰﾄ	1	(VM550-600)
-	63110-18921		CHART,CAPACITY	ﾁｬｰﾄ	1	[EXB/CHINESE]
7	02432-01008		RIVET	ﾘﾍﾞｯﾄ	4	
8	27049-12172	*	DECAL,AIR-PRESSURE	ﾃﾞｶﾙ	1	
9	273A9-12242	*	DECAL,TCM	ﾃﾞｶﾙ	2	
10	22N59-12041		DECAL,B/WEIGHT,T	ﾃﾞｶﾙ	1	
11	22N59-12051		DECAL,B/WEIGHT,C	ﾃﾞｶﾙ	1	
12	22N59-12061		DECAL,B/WEIGHT,M	ﾃﾞｶﾙ	1	

FIG.150 DECAL (2/2)

(F7Z39120) ﾃﾞｶﾙ(2/2)

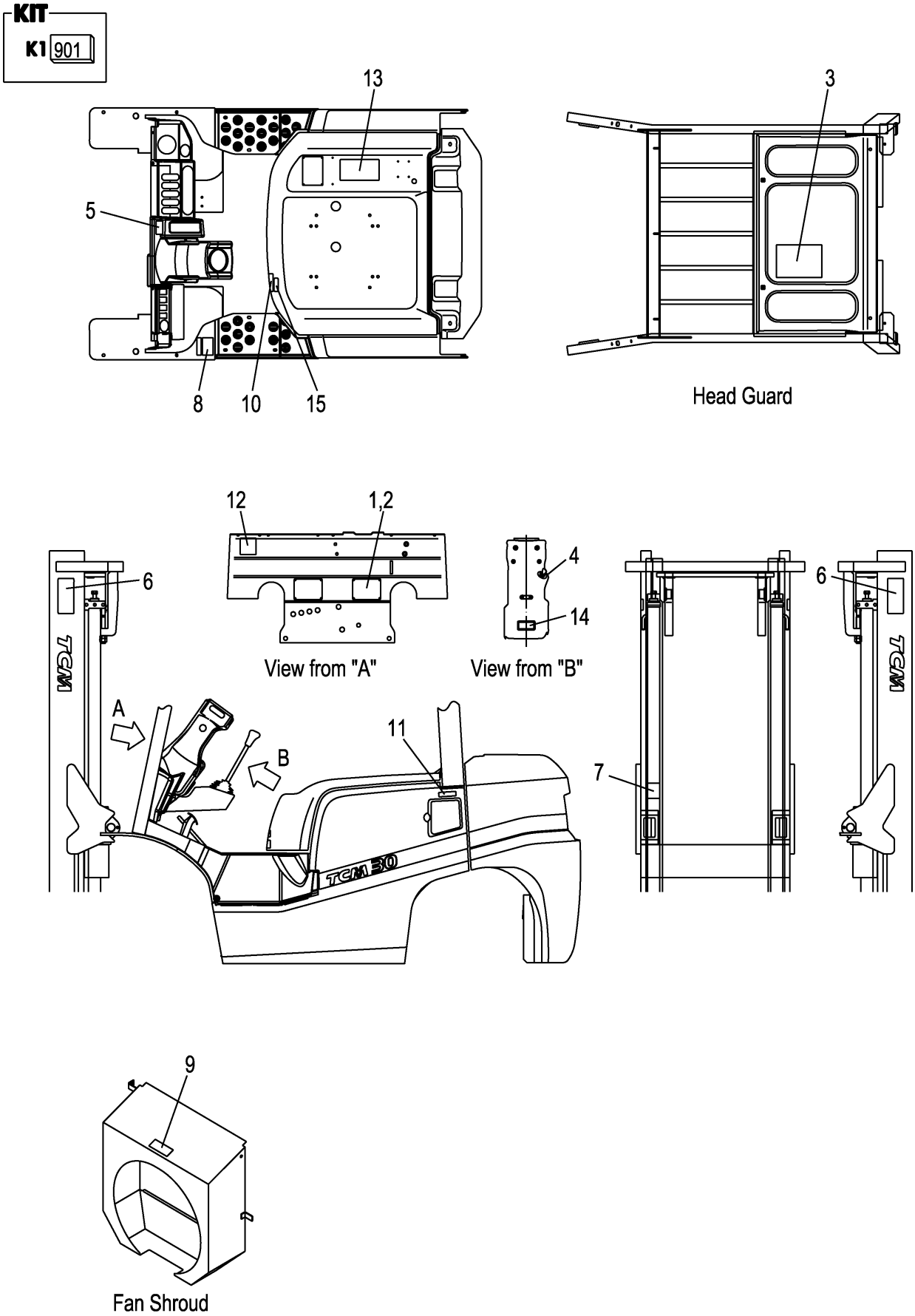

A:FD30C3Z FD30T3Z

Item No	Part No.	Mark	Description		Req'd	Remarks : Serial No.
901	C-11452-2N5-D	K1	KIT,DECAL,JPN	ﾃﾞｶﾙｷｯﾄ	1	INC.3-15,FIG.149:8,9
1	NO PART NO.	#	PLATE,NAME	ﾌﾟﾚｰﾄ	1	
2	216G9-12131		RIVET	ﾘﾍﾞｯﾄ	4	
3	22N59-12261	*	DECAL,LUBRICATION	ﾃﾞｶﾙ	1	
4	216G9-12071	*	DECAL,STARTER-SWITCH	ﾃﾞｶﾙ	1	
5	214A5-53012	*	DECAL,BRAKE-LEVER	ﾃﾞｶﾙ	1	
6	27419-12062	*	DECAL,MAST-CAUTION	ﾃﾞｶﾙ	2	
7	27419-12072	*	DECAL,CROSS-BEAM	ﾃﾞｶﾙ	1	
8	216G9-12062	*	DECAL,TIRE-CAUTION	ﾃﾞｶﾙ	1	
9	216G9-12052	*	DECAL,FAN-CAUTION	ﾃﾞｶﾙ	1	
10	238F9-12071	*	DECAL,FUEL-CAPACITY	ﾃﾞｶﾙ	1	
11	239A9-12501	*	DECAL,LIGHT-OIL	ﾃﾞｶﾙ	1	
12	271A9-12251	*	DECAL,CAUTION	ﾃﾞｶﾙ	1	
13	239A9-12301	*	DECAL,WARNING-PLATE	ﾃﾞｶﾙ	1	
14	26519-12281	*	DECAL,HOSE	ﾃﾞｶﾙ	1	
15	22N59-12351	*	DECAL,BONNET-CAUTION	ﾃﾞｶﾙ	1	

FIG.151 DECAL (2/2)[EXB]

(F7Z391B0) ﾃﾞｶﾙ(2/2)

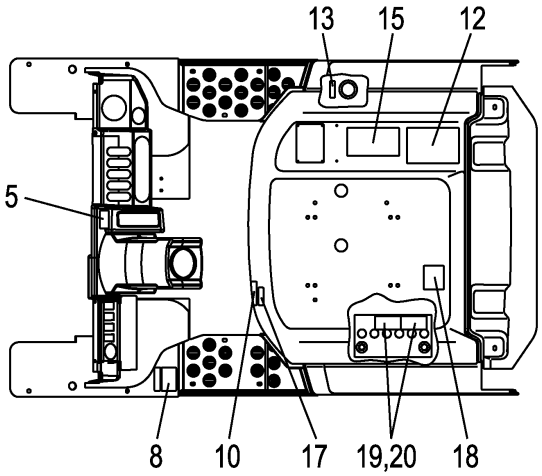

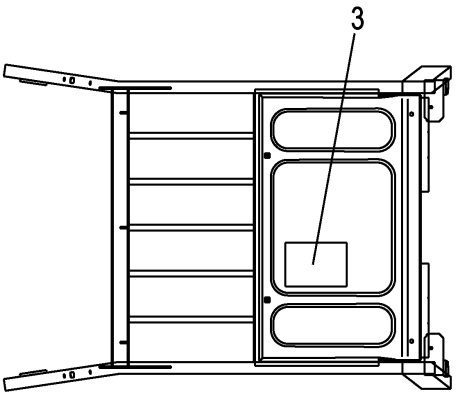

Head Guard

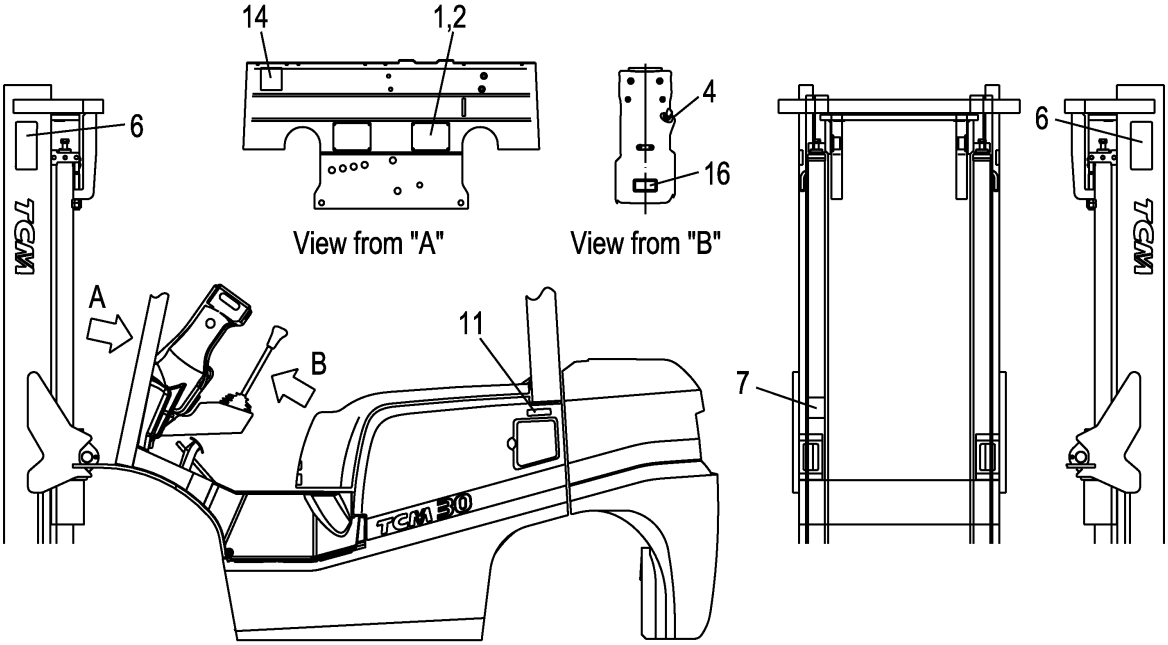

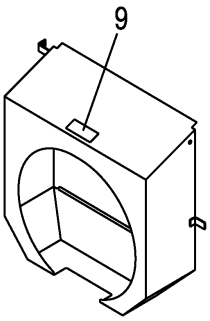

Fan Shroud

Radiator Reserve Tank

A:FD30C3Z FD30T3Z

Item No	Part No.	Mark	Description		Req'd	Remarks : Serial No.
901	C-11452-2N0-E	K1	KIT,DECAL,ENGLISH	ﾃﾞｶﾙｷｯﾄ	1	[EXB/ENGLISH]
						INC.3-11,14-21,FIG.149:8,9
902	C-11452-2N0-C	K2	KIT,DECAL,CHINESE	ﾃﾞｶﾙｷｯﾄ	1	[EXB/CHINESE]
						INC.3-19,21,FIG.149:8,9
1	NO PART NO.	#	PLATE,NAME	ﾌﾟﾚｰﾄ	1	[EXB/ENGLISH]
-	NO PART NO.	#	PLATE,NAME	ﾌﾟﾚｰﾄ	1	[EXB/CHINESE]
2	216G9-12131		RIVET	ﾘﾍﾞｯﾄ	4	[EXB]
3	52N52-72101	*	CHART,LUBRICATION	ﾁｬｰﾄ	1	[EXB/ENGLISH]
-	52N52-82401	*	CHART,LUBRICATION	ﾁｬｰﾄ	1	[EXB/CHINESE]
4	216G9-12071	*	DECAL,STARTER-SWITCH	ﾃﾞｶﾙ	1	[EXB]
5	514A3-82002	*	DECAL,BRAKE-LEVER	ﾃﾞｶﾙ	1	[EXB/ENGLISH]
-	514A2-82012	*	DECAL,BRAKE-LEVER	ﾃﾞｶﾙ	1	[EXB/CHINESE]
6	27419-12061	*	DECAL,MAST-CAUTION	ﾃﾞｶﾙ	2	[EXB]
7	27419-12071	*	DECAL,CROSS-BEAM	ﾃﾞｶﾙ	1	[EXB]
8	516G2-72711	*	DECAL,TIRE-CAUTION	ﾃﾞｶﾙ	1	[EXB/ENGLISH]
-	516G2-82061	*	DECAL,TIRE-CAUTION	ﾃﾞｶﾙ	1	[EXB/CHINESE]
9	516G2-72701	*	DECAL,FAN-CAUTION	ﾃﾞｶﾙ	1	[EXB/ENGLISH]
-	516G2-82051	*	DECAL,FAN-CAUTION	ﾃﾞｶﾙ	1	[EXB/CHINESE]
10	536G2-82181	*	DECAL,FUEL-CAPACITY	ﾃﾞｶﾙ	1	[EXB/ENGLISH]
-	536G2-82281	*	DECAL,FUEL-CAPACITY	ﾃﾞｶﾙ	1	[EXB/CHINESE]
11	509K3-82681	*	DECAL,LIGHT-OIL	ﾃﾞｶﾙ	1	[EXB/ENGLISH]
-	539A2-82051	*	DECAL,LIGHT-OIL	ﾃﾞｶﾙ	1	[EXB/CHINESE]
12	53652-82551	*	DECAL,CAUTION	ﾃﾞｶﾙ	1	[EXB/CHINESE]
13	53652-82541	*	DECAL,OIL	ﾃﾞｶﾙ	1	[EXB/CHINESE]
14	571A3-82361	*	DECAL,CAUTION	ﾃﾞｶﾙ	1	[EXB]
15	516G3-82801	*	DECAL,CAUTION	ﾃﾞｶﾙ	1	[EXB/ENGLISH]
-	52672-82073	*	DECAL,WARNING-PLATE	ﾃﾞｶﾙ	1	[EXB/CHINESE]
16	509K2-82251	*	DECAL,STEERING-HOSE	ﾃﾞｶﾙ	1	[EXB/ENGLISH]
-	509K3-83451	*	DECAL,STEERING-HOSE	ﾃﾞｶﾙ	1	[EXB/CHINESE]
17	52N52-72201	*	DECAL,BONNET-CAUTION	ﾃﾞｶﾙ	1	[EXB/ENGLISH]
-	52N52-82501	*	DECAL,BONNET-CAUTION	ﾃﾞｶﾙ	1	[EXB/CHINESE]
18	577H3-82151	*	DECAL,GAS-SPRING	ﾃﾞｶﾙ	1	[EXB/ENGLISH]
-	577H2-82021	*	DECAL,GAS-SPRING	ﾃﾞｶﾙ	1	[EXB/CHINESE]
19	534A3-82311	*	DECAL,BATTERY,A	ﾃﾞｶﾙ	1	[EXB/ENGLISH]
-	534A3-82531	*	DECAL,BATTERY	ﾃﾞｶﾙ	1	[EXB/CHINESE]
20	534A3-82421	*	DECAL,BATTERY,B	ﾃﾞｶﾙ	1	[EXB/ENGLISH]
21	23659-12101	*	DECAL,LIFE-COOLANT	ﾃﾞｶﾙ	1	[EXB]

FIG.152 SERVICE TOOL

(F7Z39210) サービスツール

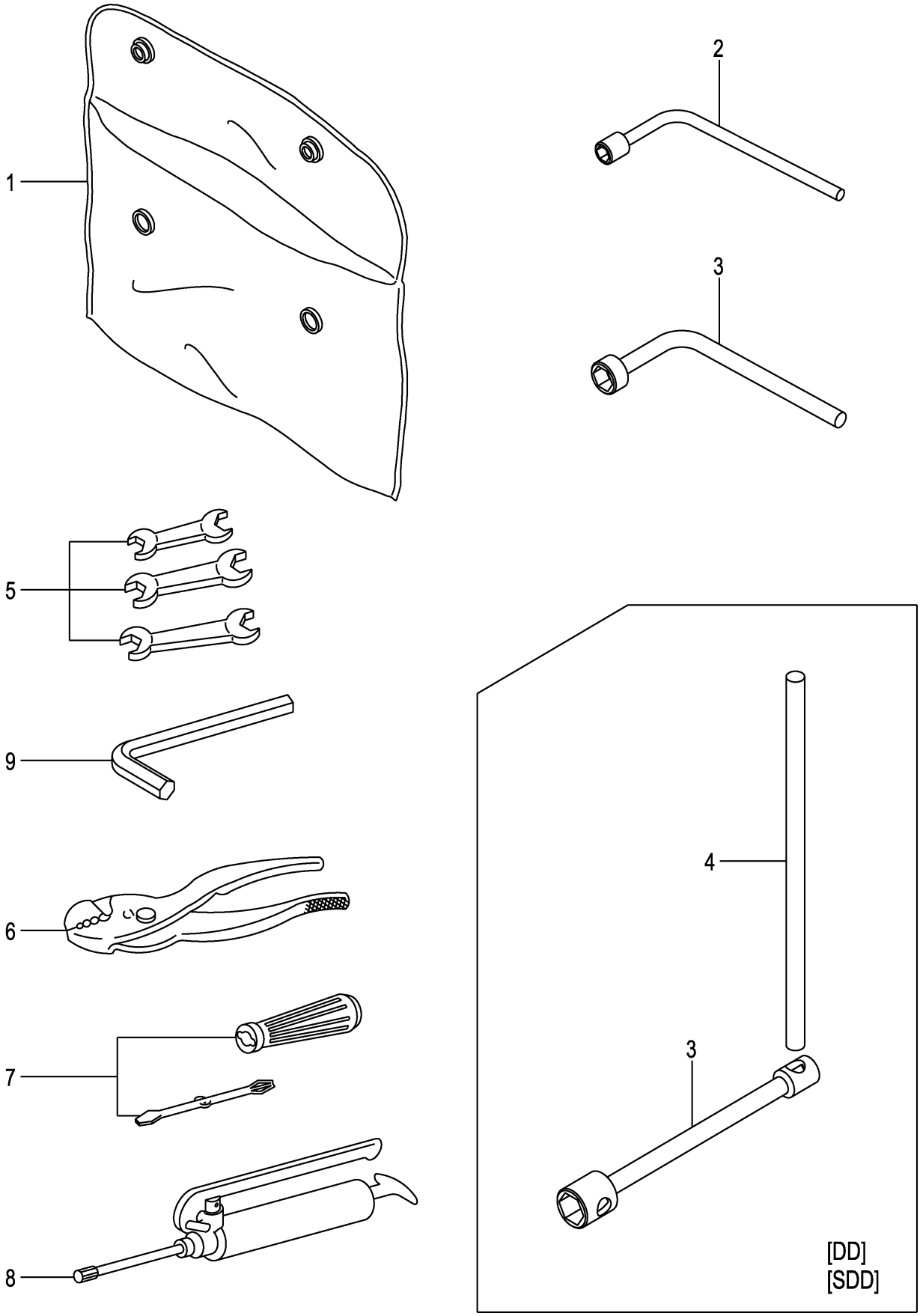

A:FD30C3Z FD30T3Z

Item No	Part No.	Mark	Description		Req'd	Remarks : Serial No.
1	214A9-20101		SACK,SERVICE-TOOLS	ｻｯｸ	1	
2	22199-22251		WRENCH,HUB-NUT,21MM	ﾚﾝﾁ	1	(REAR)
3	24499-22011		WRENCH,HUB-NUT,41MM	ﾚﾝﾁ	1	(FRONT)
-	23819-20011		WRENCH,HUB-NUT,41MM	ﾚﾝﾁ	1	[DD][SDD](FRONT)
4	23819-20021		LEVER,WRENCH,HUB-NUT	ﾚﾊﾞｰ	1	[DD][SDD]
5	25599-22051		SET,SPANNER	ｽﾊﾟﾅｾｯﾄ	1	
6	23019-20011		PLIER,150MM	ﾌﾟﾗｲﾔ	1	
7	22199-22261		SET,DRIVER	ﾄﾞﾗｲﾊﾞｾｯﾄ	1	
8	22199-22001		GUN,GREASE	ｶﾞﾝ	1	
9	25599-22061		WRENCH,HEXAGON	ﾚﾝﾁ	1	

FIG.153 FORK [VM2N9]

(M7028120) フォーク

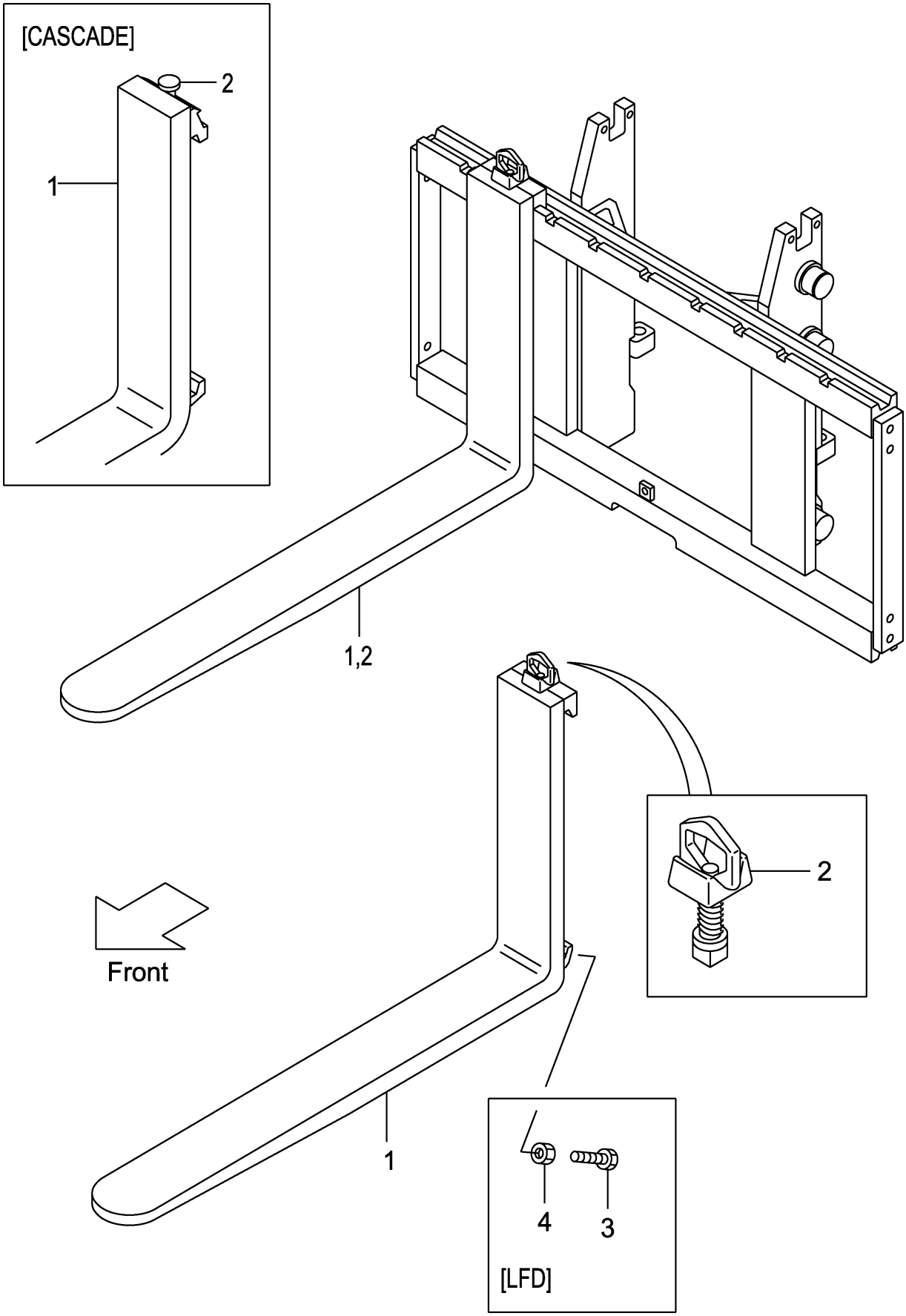

A:VM2N9(3T)

Item No	Part No.	Mark	Description		Req'd	Remarks : Serial No.
1	214J8-10581		FORK	ﾌｫｰｸ	2	[LF100] INC.2
-	214J8-10501		FORK	ﾌｫｰｸ	2	[LF107] INC.2
-	214J8-10501		FORK	ﾌｫｰｸ	2	(L=1070) INC.2
-	214J8-10591		FORK	ﾌｫｰｸ	2	[LF110] INC.2
-	214J8-10601		FORK	ﾌｫｰｸ	2	[LF120] INC.2
-	214J8-10511		FORK	ﾌｫｰｸ	2	[LF122] INC.2
-	214J8-10611		FORK	ﾌｫｰｸ	2	[LF130] INC.2
-	214J8-10521		FORK	ﾌｫｰｸ	2	[LF137] INC.2
-	214J8-10621		FORK	ﾌｫｰｸ	2	[LF140] INC.2
-	214J8-10631		FORK	ﾌｫｰｸ	2	[LF150] INC.2
-	214J8-10531		FORK	ﾌｫｰｸ	2	[LF152] INC.2
-	214J8-10641		FORK	ﾌｫｰｸ	2	[LF160] INC.2
-	214J8-10541		FORK	ﾌｫｰｸ	2	[LF167] INC.2
-	214J8-10651		FORK	ﾌｫｰｸ	2	[LF170] INC.2
-	214J8-10661		FORK	ﾌｫｰｸ	2	[LF180] INC.2
-	214J8-10551		FORK	ﾌｫｰｸ	2	[LF182] INC.2
-	214J8-10671		FORK	ﾌｫｰｸ	2	[LF190] INC.2
-	214J8-10561		FORK	ﾌｫｰｸ	2	[LF197] INC.2
-	214J8-10681		FORK	ﾌｫｰｸ	2	[LF200] INC.2
-	214J8-10571		FORK	ﾌｫｰｸ	2	[LF212] INC.2
-	234F8-10581		FORK	ﾌｫｰｸ	2	[LFD100] INC.2
-	234F8-10501		FORK	ﾌｫｰｸ	2	[LFD107] INC.2
-	234F8-10591		FORK	ﾌｫｰｸ	2	[LFD110] INC.2
-	234F8-10601		FORK	ﾌｫｰｸ	2	[LFD120] INC.2
-	234F8-10511		FORK	ﾌｫｰｸ	2	[LFD122] INC.2
-	234F8-10611		FORK	ﾌｫｰｸ	2	[LFD130] INC.2
-	234F8-10521		FORK	ﾌｫｰｸ	2	[LFD137] INC.2
-	234F8-10621		FORK	ﾌｫｰｸ	2	[LFD140] INC.2
-	234F8-10631		FORK	ﾌｫｰｸ	2	[LFD150] INC.2
-	234F8-10531		FORK	ﾌｫｰｸ	2	[LFD152] INC.2
-	234F8-10641		FORK	ﾌｫｰｸ	2	[LFD160] INC.2
-	234F8-10541		FORK	ﾌｫｰｸ	2	[LFD167] INC.2
-	234F8-10651		FORK	ﾌｫｰｸ	2	[LFD170] INC.2
-	234F8-10661		FORK	ﾌｫｰｸ	2	[LFD180] INC.2
-	234F8-10551		FORK	ﾌｫｰｸ	2	[LFD182] INC.2
-	234F8-10671		FORK	ﾌｫｰｸ	2	[LFD190] INC.2
-	234F8-10561		FORK	ﾌｫｰｸ	2	[LFD197] INC.2
-	234F8-10681		FORK	ﾌｫｰｸ	2	[LFD200] INC.2
-	234F8-10571		FORK	ﾌｫｰｸ	2	[LFD212] INC.2
-	22N98-10501		FORK	ﾌｫｰｸ	2	[LF107/CASCADE] INC.2
-	22N98-10511		FORK	ﾌｫｰｸ	2	[LF122/CASCADE] INC.2
2	214J8-11002		STOPPER,FORK	ｽﾄｯﾊﾟ	2	
-	W-K3PK-M		KIT,PIN,STOPPER	ｽﾄｯﾊﾟｷｯﾄ	2	[CASCADE]
3	234F8-12101		BOLT	ﾎﾞﾙﾄ	4	[LFD]
4	01402-00010		NUT	ﾅｯﾄ	4	[LFD]

FIG.154 LIFT BRACKET [VM2N9]

(M7028230) ﾘﾌﾄﾌﾞﾗｹｯﾄ

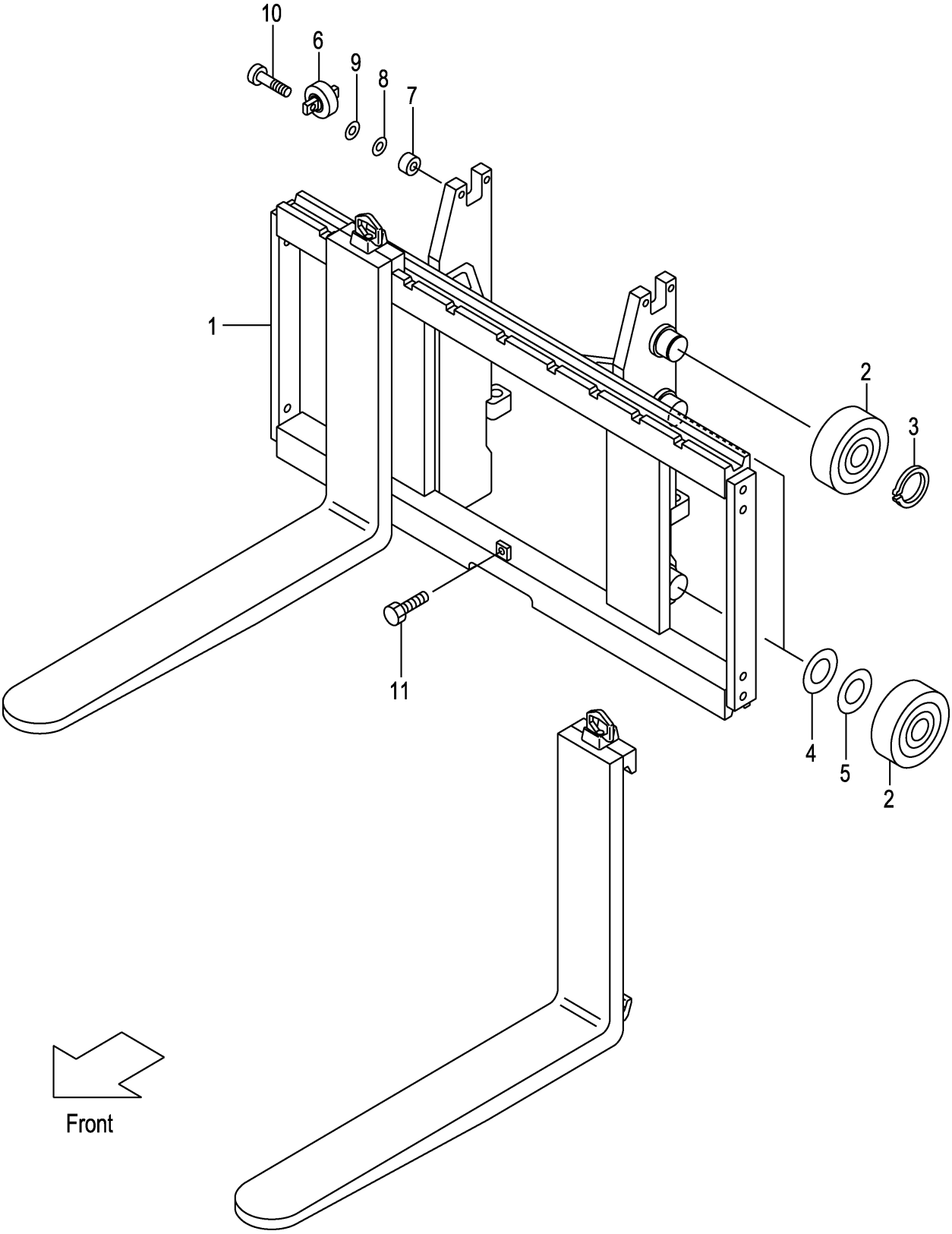

A:VM2N9(3T)

Item No	Part No.	Mark	Description		Req'd	Remarks : Serial No.
1	22N98-20201		BRACKET,LIFT	ﾌﾞﾗｹｯﾄ	1	
2	277P8-22051		ROLLER,END,119.0	ﾛｰﾗ	6	
-	277P8-22061		ROLLER,END,119.5	ﾛｰﾗ	(6)	
3	02100-00045		RING,SNAP	ｽﾅｯﾌﾟﾘﾝｸﾞ	2	
4	277P8-22071		SHIM,T-0.5	ｼﾑ	5	
5	277P8-22081		SHIM,T-1.0	ｼﾑ	5	
6	22N58-32701		ROLLER,SIDE	ﾛｰﾗ	2	
7	22N58-32711		SPACER	ｽﾍﾟｰｻ	4	
8	22018-30261		SHIM,T-0.5	ｼﾑ	4	
9	22018-30121		SHIM,T-1.0	ｼﾑ	4	
10	01103-10045		BOLT	ﾎﾞﾙﾄ	4	
11	01184-12025		BOLT & WASHER	ﾎﾞﾙﾄ & ﾜｯｼｬ	1	

FIG.155 BACKREST [VM2N9]

(M7028240) ﾊﾞｯｸﾚｽﾄ

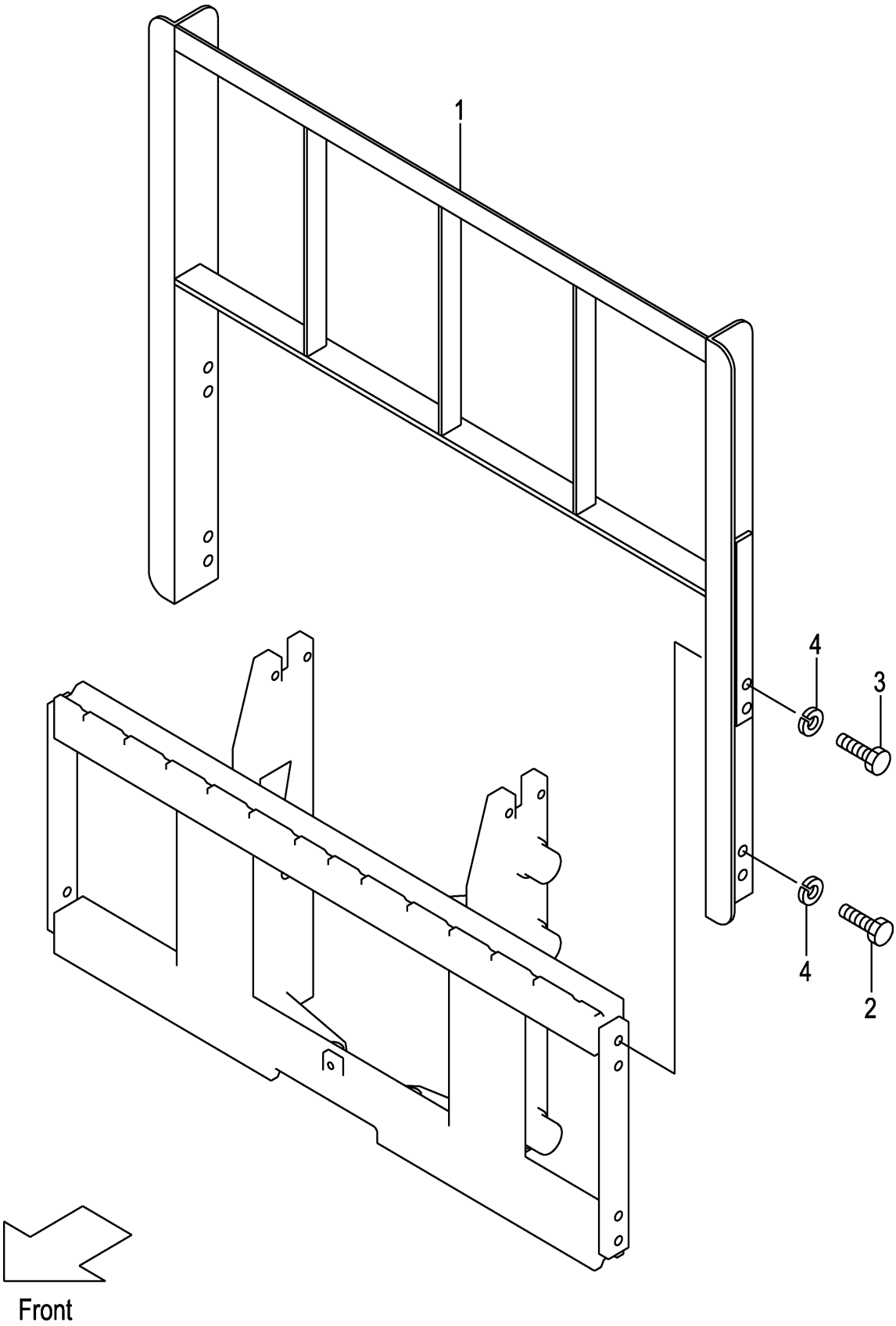

A:VM2N9(3T)

Item No	Part No.	Mark	Description		Req'd	Remarks : Serial No.
1	234F8-22201		BACKREST	ﾊﾞｯｸﾚｽﾄ	1	
2	01100-14025		BOLT	ﾎﾞﾙﾄ	4	
3	01100-14030		BOLT	ﾎﾞﾙﾄ	4	
4	02010-00014		WASHER	ﾜｯｼｬ	8	

FIG.156 MAST [VM2N9]

(M7028320) マスト

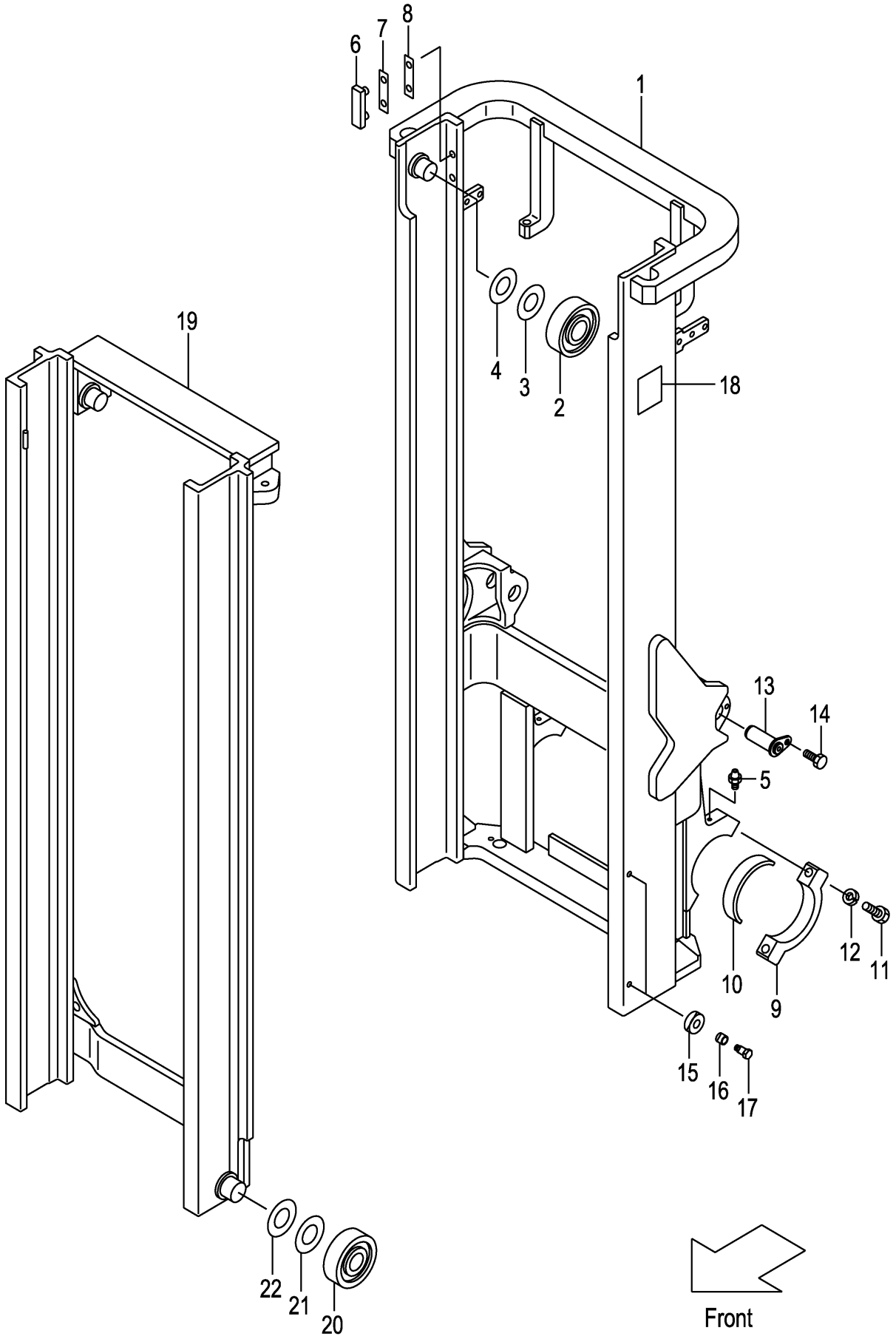

A:VM2N9(3T)

Item No	Part No.	Mark	Description		Req'd	Remarks : Serial No.
1	22N98-30211		MAST,OUTER VM200	ｱｳﾀﾏｽﾄ	1	
-	22N98-30221		MAST,OUTER VM225	ｱｳﾀﾏｽﾄ	1	
-	22N98-30231		MAST,OUTER VM250	ｱｳﾀﾏｽﾄ	1	
-	22N98-30241		MAST,OUTER VM270	ｱｳﾀﾏｽﾄ	1	
-	22N98-30251		MAST,OUTER VM275	ｱｳﾀﾏｽﾄ	1	
-	22N98-30201		MAST,OUTER VM300	ｱｳﾀﾏｽﾄ	1	
-	22N98-30261		MAST,OUTER VM325	ｱｳﾀﾏｽﾄ	1	
-	22N98-30271		MAST,OUTER VM330	ｱｳﾀﾏｽﾄ	1	
-	22N98-30281		MAST,OUTER VM350	ｱｳﾀﾏｽﾄ	1	
-	22N98-30291		MAST,OUTER VM366	ｱｳﾀﾏｽﾄ	1	
-	22N98-30301		MAST,OUTER VM370	ｱｳﾀﾏｽﾄ	1	
-	22N98-30311		MAST,OUTER VM375	ｱｳﾀﾏｽﾄ	1	
-	22N98-30321		MAST,OUTER VM400	ｱｳﾀﾏｽﾄ	1	
-	22N98-30331		MAST,OUTER VM425	ｱｳﾀﾏｽﾄ	1	
-	22N98-30341		MAST,OUTER VM450	ｱｳﾀﾏｽﾄ	1	
-	22N98-30351		MAST,OUTER VM475	ｱｳﾀﾏｽﾄ	1	
-	22N98-30361		MAST,OUTER VM500	ｱｳﾀﾏｽﾄ	1	
-	22N98-30371		MAST,OUTER VM550	ｱｳﾀﾏｽﾄ	1	
-	22N98-30381		MAST,OUTER VM600	ｱｳﾀﾏｽﾄ	1	
2	277P8-22051		ROLLER,END,119.0	ﾛｰﾗ	2	
3	277P8-22071		SHIM,T-0.5	ｼﾑ	12	
4	277P8-22081		SHIM,T-1.0	ｼﾑ	12	
5	04901-00100		FITTING	ﾌｨｯﾃｨﾝｸﾞ	2	
6	216G8-33401		SLIPPER	ｽﾘｯﾊﾟ	2	
7	216G8-33361		SHIM,T-0.5	ｼﾑ	8	
8	216G8-33371		SHIM,T-1.0	ｼﾑ	4	
9	277P8-32701		CAP	ｷｬｯﾌﾟ	2	
10	214A8-02201		BUSHING	ﾌﾞｯｼﾝｸﾞ	2	
11	01103-16065		BOLT	ﾎﾞﾙﾄ	4	
12	02011-00016		WASHER	ﾜｯｼｬ	4	
13	272K8-52201		PIN	ﾋﾟﾝ	2	
14	216G8-52301		BOLT & WASHER	ﾎﾞﾙﾄ & ﾜｯｼｬ	2	
15	22N58-34501		RUBBER	ﾗﾊﾞｰ	4	
16	22N58-34601		COLLAR	ｶﾗ-	4	
17	214A0-82831		BOLT	ﾎﾞﾙﾄ	4	
18	23678-06002		PLATE,NAME	ﾌﾟﾚｰﾄ	1	
19	22N98-30411		MAST,INNER VM200	ｲﾝﾅﾏｽﾄ	1	
-	22N98-30421		MAST,INNER VM225	ｲﾝﾅﾏｽﾄ	1	
-	22N98-30431		MAST,INNER VM250	ｲﾝﾅﾏｽﾄ	1	
-	22N98-30441		MAST,INNER VM270	ｲﾝﾅﾏｽﾄ	1	
-	22N98-30451		MAST,INNER VM275	ｲﾝﾅﾏｽﾄ	1	
-	22N98-30401		MAST,INNER VM300	ｲﾝﾅﾏｽﾄ	1	
-	22N98-30461		MAST,INNER VM325	ｲﾝﾅﾏｽﾄ	1	
-	22N98-30471		MAST,INNER VM330	ｲﾝﾅﾏｽﾄ	1	
-	22N98-30481		MAST,INNER VM350	ｲﾝﾅﾏｽﾄ	1	
-	22N98-30491		MAST,INNER VM366	ｲﾝﾅﾏｽﾄ	1	
-	22N98-30501		MAST,INNER VM370	ｲﾝﾅﾏｽﾄ	1	
-	22N98-30511		MAST,INNER VM375	ｲﾝﾅﾏｽﾄ	1	
-	22N98-30521		MAST,INNER VM400	ｲﾝﾅﾏｽﾄ	1	
-	22N98-30531		MAST,INNER VM425	ｲﾝﾅﾏｽﾄ	1	

FIG.156 MAST [VM2N9]

(M7028320) マスト

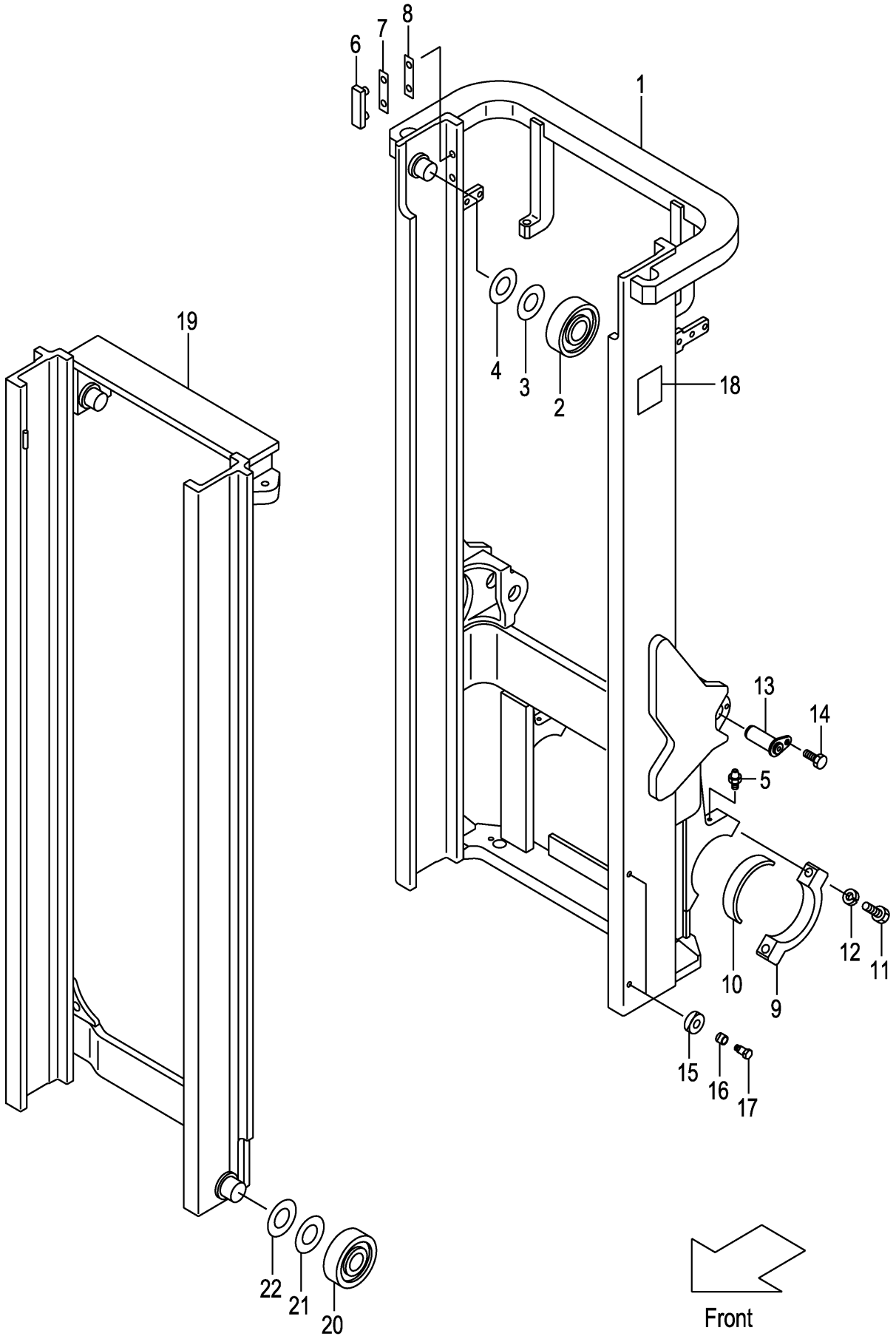

A:VM2N9(3T)

Item No	Part No.	Mark	Description		Req'd	Remarks : Serial No.
-	22N98-30541		MAST,INNER VM450	ｲﾝﾅﾏｽﾄ	1	
-	22N98-30551		MAST,INNER VM475	ｲﾝﾅﾏｽﾄ	1	
-	22N98-30561		MAST,INNER VM500	ｲﾝﾅﾏｽﾄ	1	
-	22N98-30571		MAST,INNER VM550	ｲﾝﾅﾏｽﾄ	1	
-	22N98-30581		MAST,INNER VM600	ｲﾝﾅﾏｽﾄ	1	
20	277P8-22051		ROLLER,END,119.0	ﾛｰﾗ	2	
-	277P8-22061		ROLLER,END,119.5	ﾛｰﾗ	(2)	
21	277P8-22071		SHIM,T-0.5	ｼﾑ	12	
22	277P8-22081		SHIM,T-1.0	ｼﾑ	12	

M E M O

M E M O

FIG.157 LIFT CYLINDER [VM2N9]

(M7028430) リフトシリンダ

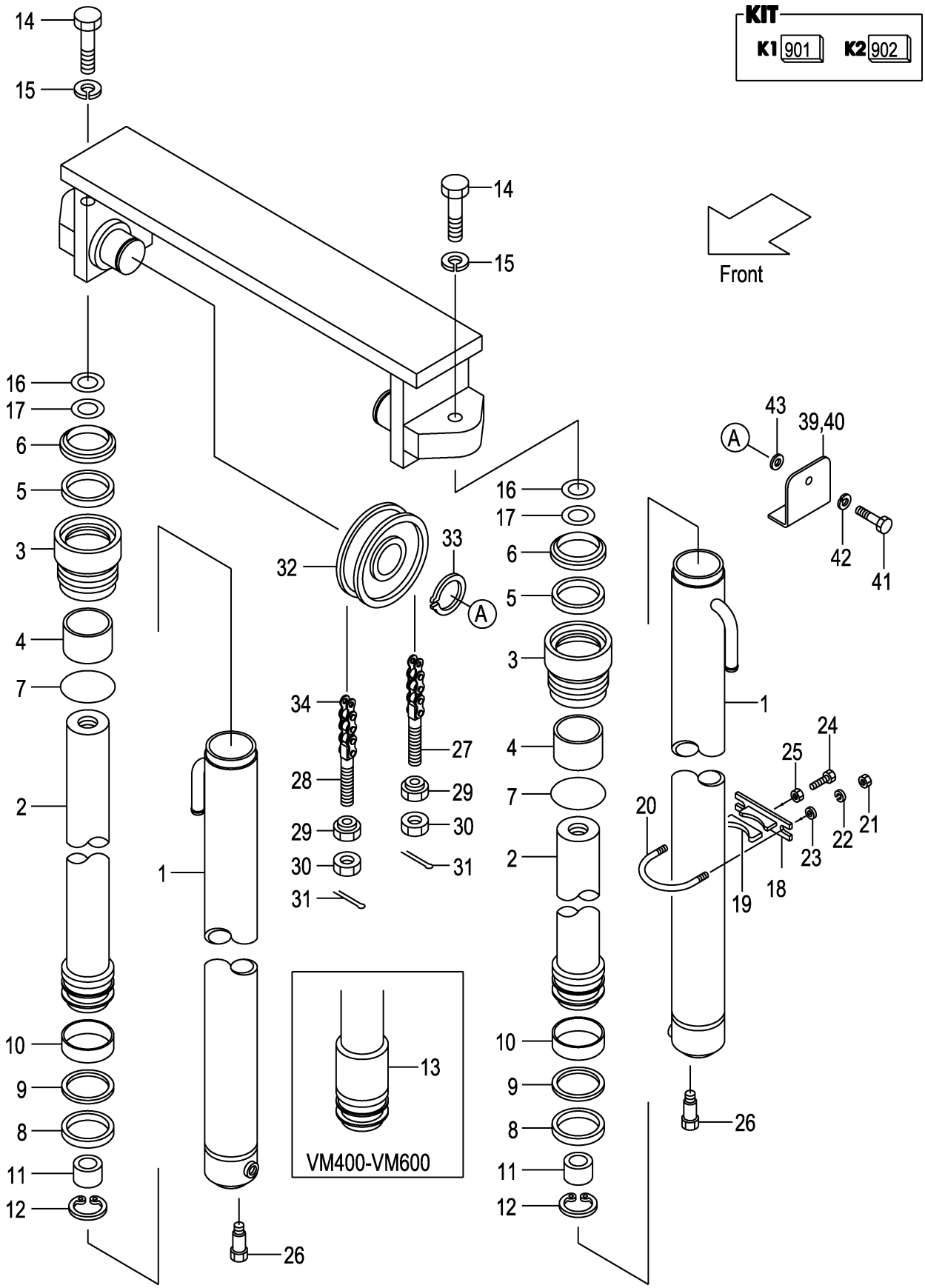

A:VM2N9(3T)

Item No	Part No.	Mark	Description		Req'd	Remarks : Serial No.
A1	22N98-40211		CYL-ASSY,LIFT VM200	ﾘﾌﾄｼﾘﾝﾀﾞｱｯｾﾝ	2	INC.1-12
-	22N98-40221		CYL-ASSY,LIFT VM225	ﾘﾌﾄｼﾘﾝﾀﾞｱｯｾﾝ	2	INC.1-12
-	22N98-40231		CYL-ASSY,LIFT VM250	ﾘﾌﾄｼﾘﾝﾀﾞｱｯｾﾝ	2	INC.1-12
-	22N98-40241		CYL-ASSY,LIFT VM270	ﾘﾌﾄｼﾘﾝﾀﾞｱｯｾﾝ	2	INC.1-12
-	22N98-40251		CYL-ASSY,LIFT VM275	ﾘﾌﾄｼﾘﾝﾀﾞｱｯｾﾝ	2	INC.1-12
-	22N98-40201		CYL-ASSY,LIFT VM300	ﾘﾌﾄｼﾘﾝﾀﾞｱｯｾﾝ	2	INC.1-12
-	22N98-40261		CYL-ASSY,LIFT VM325	ﾘﾌﾄｼﾘﾝﾀﾞｱｯｾﾝ	2	INC.1-12
-	22N98-40271		CYL-ASSY,LIFT VM330	ﾘﾌﾄｼﾘﾝﾀﾞｱｯｾﾝ	2	INC.1-12
-	22N98-40281		CYL-ASSY,LIFT VM350	ﾘﾌﾄｼﾘﾝﾀﾞｱｯｾﾝ	2	INC.1-12
-	22N98-40291		CYL-ASSY,LIFT VM366	ﾘﾌﾄｼﾘﾝﾀﾞｱｯｾﾝ	2	INC.1-12
-	22N98-40301		CYL-ASSY,LIFT VM370	ﾘﾌﾄｼﾘﾝﾀﾞｱｯｾﾝ	2	INC.1-12
-	22N98-40311		CYL-ASSY,LIFT VM375	ﾘﾌﾄｼﾘﾝﾀﾞｱｯｾﾝ	2	INC.1-12
-	22N98-40321		CYL-ASSY,LIFT VM400	ﾘﾌﾄｼﾘﾝﾀﾞｱｯｾﾝ	2	INC.1-13
-	22N98-40331		CYL-ASSY,LIFT VM425	ﾘﾌﾄｼﾘﾝﾀﾞｱｯｾﾝ	2	INC.1-13
-	22N98-40341		CYL-ASSY,LIFT VM450	ﾘﾌﾄｼﾘﾝﾀﾞｱｯｾﾝ	2	INC.1-13
-	22N98-40351		CYL-ASSY,LIFT VM475	ﾘﾌﾄｼﾘﾝﾀﾞｱｯｾﾝ	2	INC.1-13
-	22N98-40361		CYL-ASSY,LIFT VM500	ﾘﾌﾄｼﾘﾝﾀﾞｱｯｾﾝ	2	INC.1-13
-	22N98-40371		CYL-ASSY,LIFT VM550	ﾘﾌﾄｼﾘﾝﾀﾞｱｯｾﾝ	2	INC.1-13
-	22N98-40381		CYL-ASSY,LIFT VM600	ﾘﾌﾄｼﾘﾝﾀﾞｱｯｾﾝ	2	INC.1-13
901	B-3055B-00097	K1	KIT,CAP,CYL	ｼﾘﾝﾀﾞｷｬｯﾌﾟｷｯﾄ	2	INC.3,4
902	B-3055A-00058	K2	KIT,REPAIR	ﾘﾍﾟｱｷｯﾄ	2	INC.5-9
1	B-6567-12101		BODY,CYL VM200	ﾎﾞﾃﾞｨ	2	
-	B-6567-12201		BODY,CYL VM225	ﾎﾞﾃﾞｨ	2	
-	B-6567-12301		BODY,CYL VM250	ﾎﾞﾃﾞｨ	2	
-	B-6567-12401		BODY,CYL VM270	ﾎﾞﾃﾞｨ	2	
-	B-6567-12501		BODY,CYL VM275	ﾎﾞﾃﾞｨ	2	
-	B-6567-12601		BODY,CYL VM300	ﾎﾞﾃﾞｨ	2	
-	B-6567-12701		BODY,CYL VM325	ﾎﾞﾃﾞｨ	2	
-	B-6567-12801		BODY,CYL VM330	ﾎﾞﾃﾞｨ	2	
-	B-6567-12901		BODY,CYL VM350	ﾎﾞﾃﾞｨ	2	
-	B-6567-13001		BODY,CYL VM366	ﾎﾞﾃﾞｨ	2	
-	B-6567-13101		BODY,CYL VM370	ﾎﾞﾃﾞｨ	2	
-	B-6567-13201		BODY,CYL VM375	ﾎﾞﾃﾞｨ	2	
-	B-6567-13301		BODY,CYL VM400	ﾎﾞﾃﾞｨ	2	
-	B-6567-13401		BODY,CYL VM425	ﾎﾞﾃﾞｨ	2	
-	B-6567-13501		BODY,CYL VM450	ﾎﾞﾃﾞｨ	2	
-	B-6567-13601		BODY,CYL VM475	ﾎﾞﾃﾞｨ	2	
-	B-6567-13701		BODY,CYL VM500	ﾎﾞﾃﾞｨ	2	
-	B-6567-13801		BODY,CYL VM550	ﾎﾞﾃﾞｨ	2	
-	B-6567-13901		BODY,CYL VM600	ﾎﾞﾃﾞｨ	2	
2	B-6567-12102		ROD,PISTON VM200	ﾛｯﾄﾞ	2	
-	B-6567-12202		ROD,PISTON VM225	ﾛｯﾄﾞ	2	
-	B-6567-12302		ROD,PISTON VM250	ﾛｯﾄﾞ	2	
-	B-6567-12402		ROD,PISTON VM270	ﾛｯﾄﾞ	2	
-	B-6567-12502		ROD,PISTON VM275	ﾛｯﾄﾞ	2	
-	B-6567-12602		ROD,PISTON VM300	ﾛｯﾄﾞ	2	
-	B-6567-12702		ROD,PISTON VM325	ﾛｯﾄﾞ	2	
-	B-6567-12802		ROD,PISTON VM330	ﾛｯﾄﾞ	2	
-	B-6567-12902		ROD,PISTON VM350	ﾛｯﾄﾞ	2	
-	B-6567-13002		ROD,PISTON VM366	ﾛｯﾄﾞ	2	

FIG.157 LIFT CYLINDER [VM2N9]

(M7028430) リフトシリンダ

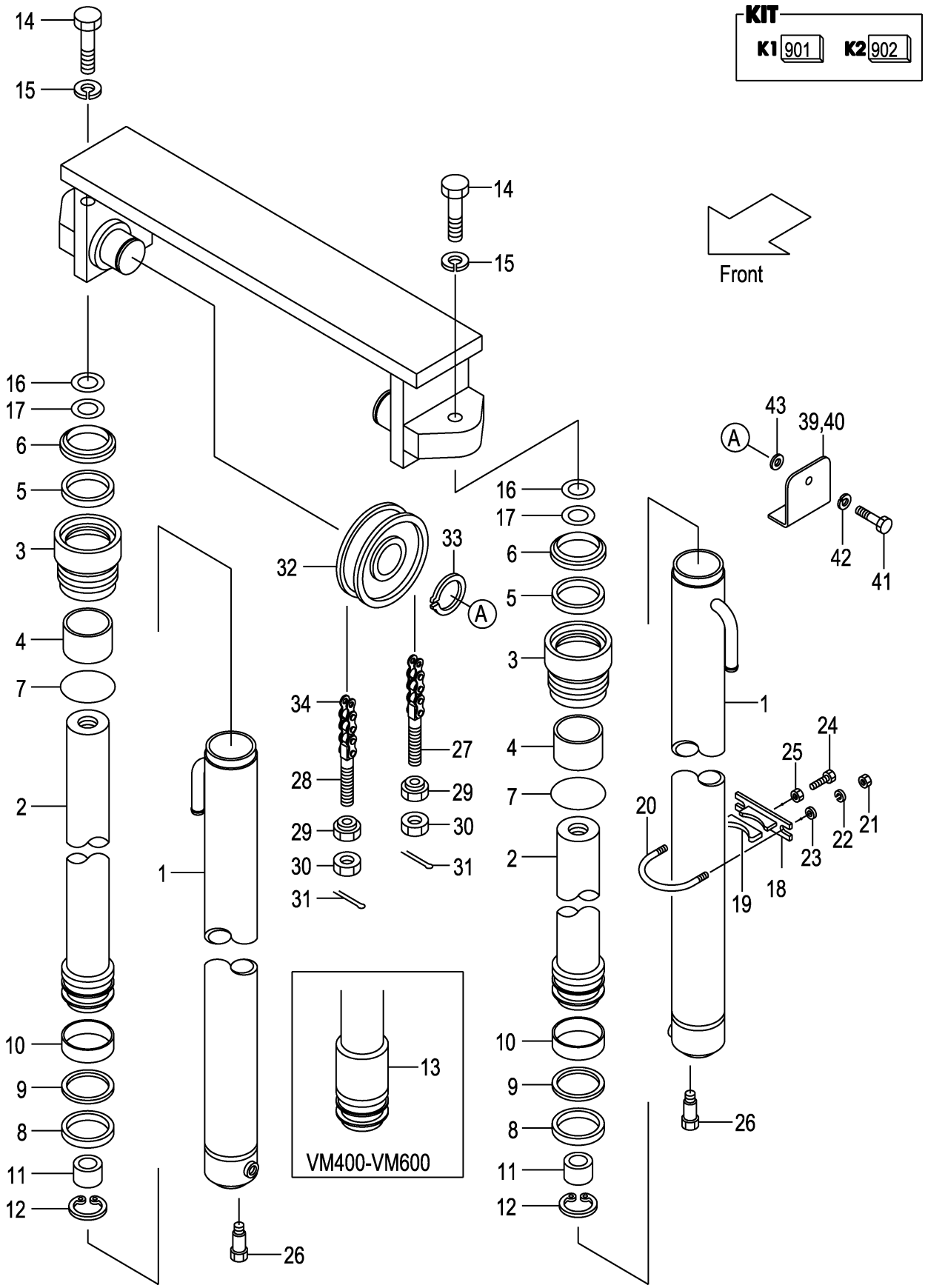

A:VM2N9(3T)

Item No	Part No.	Mark	Description		Req'd	Remarks : Serial No.
-	B-6567-13102		ROD,PISTON VM370	ﾛｯﾄﾞ	2	
-	B-6567-13202		ROD,PISTON VM375	ﾛｯﾄﾞ	2	
-	B-6567-13302		ROD,PISTON VM400	ﾛｯﾄﾞ	2	
-	B-6567-13402		ROD,PISTON VM425	ﾛｯﾄﾞ	2	
-	B-6567-13502		ROD,PISTON VM450	ﾛｯﾄﾞ	2	
-	B-6567-13602		ROD,PISTON VM475	ﾛｯﾄﾞ	2	
-	B-6567-13702		ROD,PISTON VM500	ﾛｯﾄﾞ	2	
-	B-6567-13802		ROD,PISTON VM550	ﾛｯﾄﾞ	2	
-	B-6567-13902		ROD,PISTON VM600	ﾛｯﾄﾞ	2	
3	B-30121-55043	*	CAP	ｷｬｯﾌﾟ	2	
4	B-30131-45017	*	BUSHING	ﾌﾞｯｼﾝｸﾞ	2	
5	B-30961-04512	*	U-RING	Uﾘﾝｸﾞ	2	
6	B-30191-45025	*	WIPER	ﾜｲﾊﾟ	2	
7	B-30161-91775	*	O-RING	Oﾘﾝｸﾞ	2	
8	B-30161-55046	*	U-RING	Uﾘﾝｸﾞ	2	
9	B-30461-55039	*	RING,BACK-UP	ﾘﾝｸﾞ	2	
10	B-30131-55018		BUSHING	ﾌﾞｯｼﾝｸﾞ	2	
11	B-B6551-91018		RING	ﾘﾝｸﾞ	2	
12	B-30141-91048		RING,SNAP	ｽﾅｯﾌﾟﾘﾝｸﾞ	2	
13	B-30296-72103		SPACER	ｽﾍﾟｰｻ	2	(VM400-500)
-	B-B6111-45078		SPACER	ｽﾍﾟｰｻ	2	(VM550,600)
14	01103-14040		BOLT	ﾎﾞﾙﾄ	2	
15	02011-00014		WASHER	ﾜｯｼｬ	2	
16	22517-40051		SHIM	ｼﾑ	4	
17	22717-40081		SHIM	ｼﾑ	4	
18	22N58-43011		SUPPORT	ｻﾎﾟｰﾄ	2	
19	24868-42111		RUBBER	ﾗﾊﾞｰ	2	
20	234A8-42551		U-BOLT	Uﾎﾞﾙﾄ	2	
21	01400-00010		NUT	ﾅｯﾄ	4	
22	02010-20010		WASHER	ﾜｯｼｬ	4	
23	02000-20010		WASHER	ﾜｯｼｬ	4	
24	01120-12040		BOLT	ﾎﾞﾙﾄ	2	
25	01400-00012		NUT	ﾅｯﾄ	2	
26	214A8-42661		BOLT	ﾎﾞﾙﾄ	2	
27	215K0-82701		PIN,ANCHOR	ﾋﾟﾝ	2	
28	24459-42391		PIN,ANCHOR	ﾋﾟﾝ	2	
29	22218-40191		NUT	ﾅｯﾄ	4	
30	01400-00018		NUT	ﾅｯﾄ	4	
31	02200-03040		PIN	ﾋﾟﾝ	4	
32	234A8-43501		SHEAVE	ｼｰﾌﾞ	2	
33	02100-00040		RING,SNAP	ｽﾅｯﾌﾟﾘﾝｸﾞ	2	
34	22438-45551		CHAIN VM200	ﾁｪｰﾝ	2	
-	22438-45591		CHAIN VM225	ﾁｪｰﾝ	2	
-	22438-45651		CHAIN VM250	ﾁｪｰﾝ	2	
-	22438-45691		CHAIN VM270	ﾁｪｰﾝ	2	
-	22438-45691		CHAIN VM275	ﾁｪｰﾝ	2	
-	22438-45751		CHAIN VM300	ﾁｪｰﾝ	2	
-	22438-45791		CHAIN VM325	ﾁｪｰﾝ	2	
-	22438-45811		CHAIN VM330	ﾁｪｰﾝ	2	
-	22438-45851		CHAIN VM350	ﾁｪｰﾝ	2	

FIG.157 LIFT CYLINDER [VM2N9]

(M7028430) リフトシリンダ

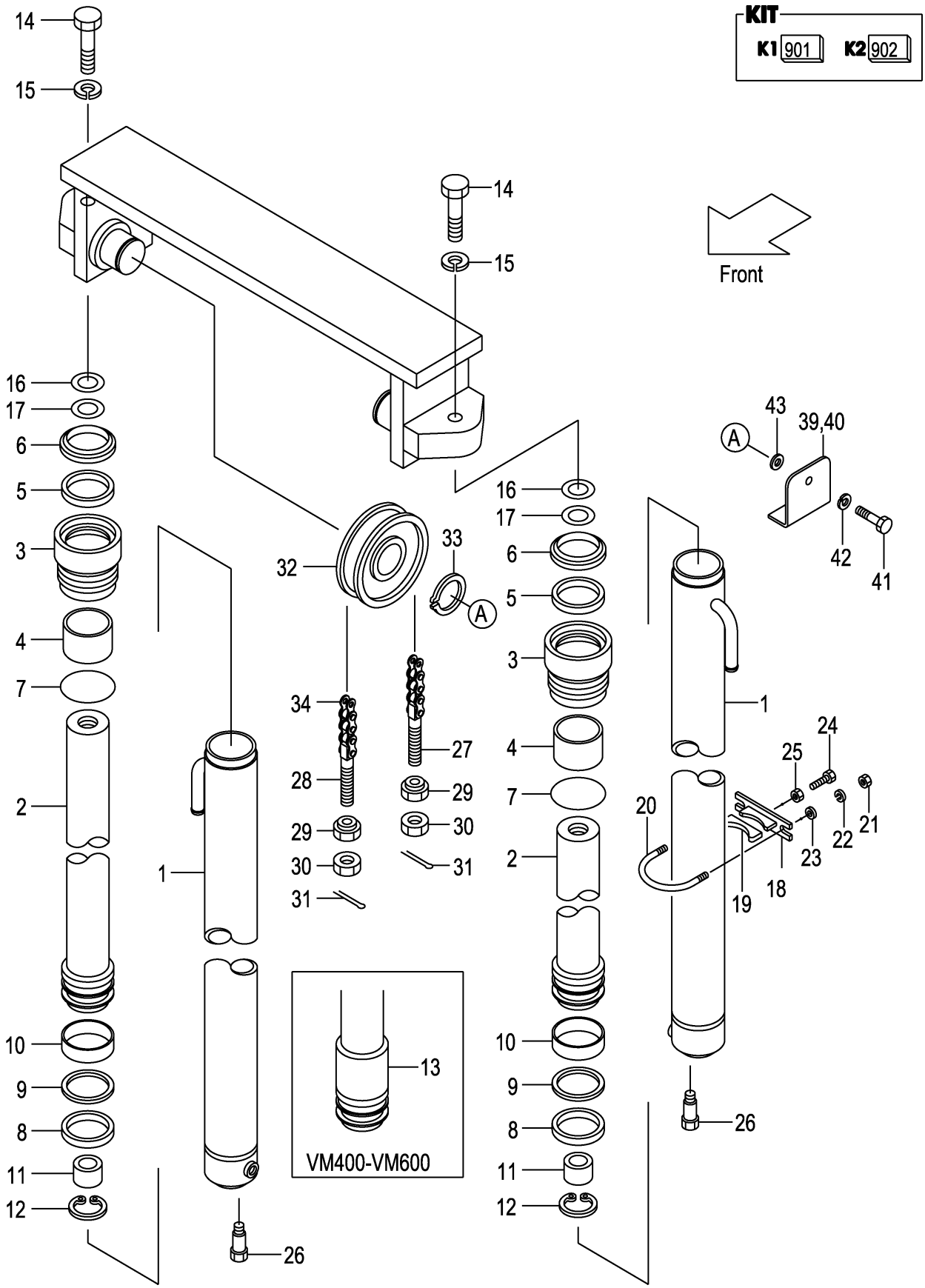

A:VM2N9(3T)

Item No	Part No.	Mark	Description	Req'd	Remarks : Serial No.
-	22438-45871		CHAIN VM366 チェーン	2	
-	22438-45891		CHAIN VM370 チェーン	2	
-	22438-45891		CHAIN VM375 チェーン	2	
-	22438-45971		CHAIN VM400 チェーン	2	
-	22438-46011		CHAIN VM425 チェーン	2	
-	22438-46071		CHAIN VM450 チェーン	2	
-	22438-46111		CHAIN VM475 チェーン	2	
-	22438-46151		CHAIN VM500 チェーン	2	
-	22438-46271		CHAIN VM550 チェーン	2	
-	22438-46371		CHAIN VM600 チェーン	2	

FIG.158 MAST PIPING [VM2N9]

(M7028440) マストパイピング

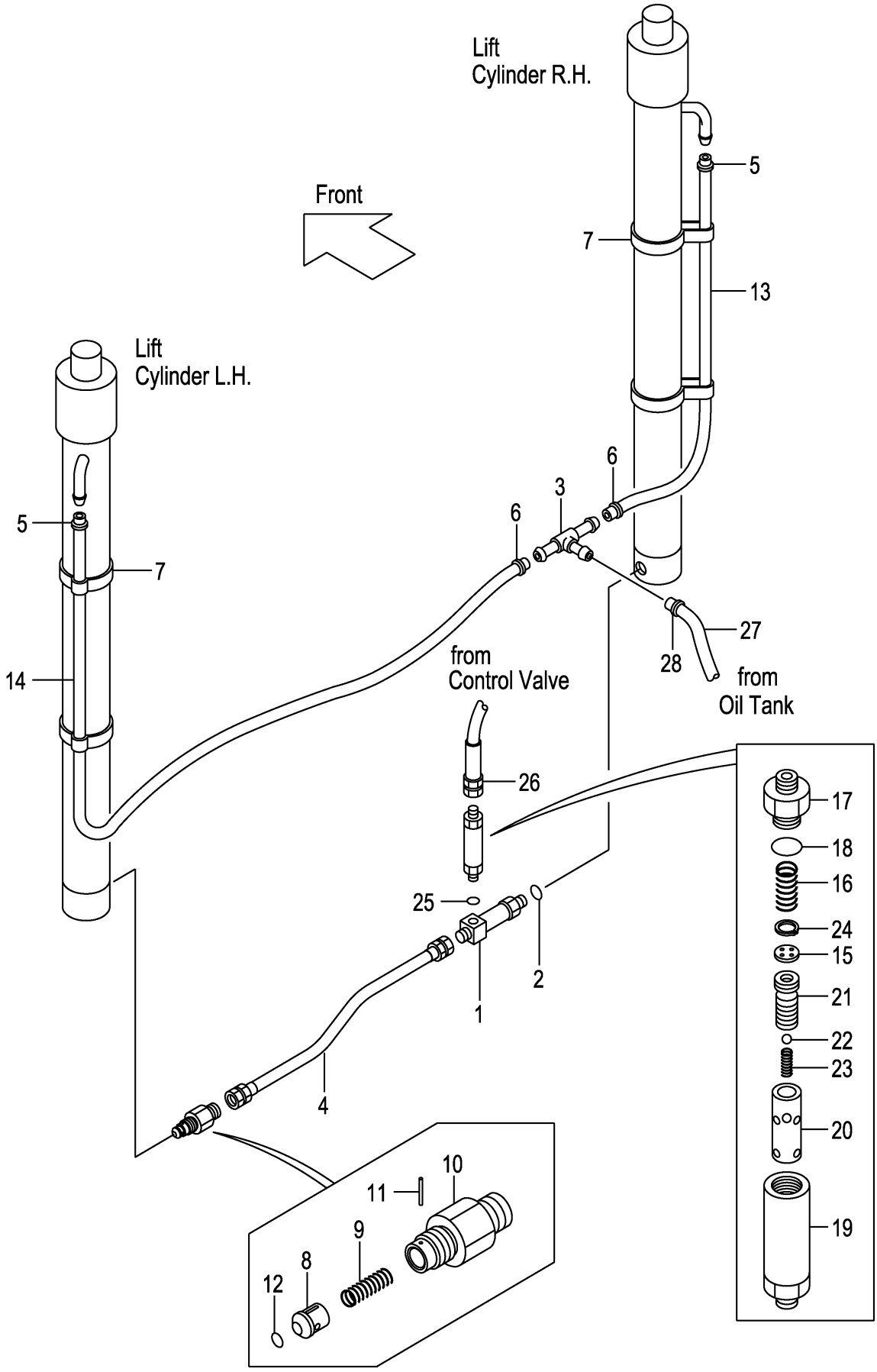

A:VM2N9(3T)

Item No	Part No.	Mark	Description		Req'd	Remarks : Serial No.
A1	234A8-41101		THREE-WAY-ASSY	ｽﾘｰｳｪｲｱｯｾﾝ	1	INC.1,2
1	NO PART NO.	#	THREE-WAY	ｽﾘｰｳｪｲ	1	
2	03320-00140		O-RING	Oﾘﾝｸﾞ	1	
3	53675-55051		THREE-WAY	ｽﾘｰｳｪｲ	1	
4	234A8-02201		HOSE	ﾎｰｽ	1	
5	24329-46201		CLIP	ｸﾘｯﾌﾟ	2	
6	04911-00021		CLIP	ｸﾘｯﾌﾟ	2	
7	22N58-45001		BAND	ﾊﾞﾝﾄﾞ	4	
A2	234A8-40701		VALVE-ASSY,CUT	ｶｯﾄﾊﾞﾙﾌﾞｱｯｾﾝ	1	INC.8-12
8	234A8-42602		PISTON	ﾋﾟｽﾄﾝ	1	
9	234A8-42611		SPRING	ｽﾌﾟﾘﾝｸﾞ	1	
10	234A8-42622		NIPPLE	ﾆｯﾌﾟﾙ	1	
11	02270-01014		PIN	ﾋﾟﾝ	1	
12	03320-00140		O-RING	Oﾘﾝｸﾞ	1	
13	04710-04110		HOSE VM200	ﾎｰｽ	1	
-	04710-04120		HOSE VM225	ﾎｰｽ	1	
-	04710-04135		HOSE VM250	ﾎｰｽ	1	
-	04710-04145		HOSE VM270	ﾎｰｽ	1	
-	04710-04145		HOSE VM275	ﾎｰｽ	1	
-	04710-04160		HOSE VM300	ﾎｰｽ	1	
-	04710-04170		HOSE VM325	ﾎｰｽ	1	
-	04710-04175		HOSE VM330	ﾎｰｽ	1	
-	04710-04185		HOSE VM350	ﾎｰｽ	1	
-	04710-04195		HOSE VM366	ﾎｰｽ	1	
-	04710-04195		HOSE VM370	ﾎｰｽ	1	
-	04710-04195		HOSE VM375	ﾎｰｽ	1	
-	04710-04215		HOSE VM400	ﾎｰｽ	1	
-	04710-04225		HOSE VM425	ﾎｰｽ	1	
-	04710-04240		HOSE VM450	ﾎｰｽ	1	
-	04710-04250		HOSE VM475	ﾎｰｽ	1	
-	04710-04265		HOSE VM500	ﾎｰｽ	1	
-	04710-04295		HOSE VM550	ﾎｰｽ	1	
-	04710-04320		HOSE VM600	ﾎｰｽ	1	
14	04710-04145		HOSE VM200	ﾎｰｽ	1	
-	04710-04165		HOSE VM225	ﾎｰｽ	1	
-	04710-04170		HOSE VM250	ﾎｰｽ	1	
-	04710-04180		HOSE VM270	ﾎｰｽ	1	
-	04710-04180		HOSE VM275	ﾎｰｽ	1	
-	04710-04190		HOSE VM300	ﾎｰｽ	1	
-	04710-04205		HOSE VM325	ﾎｰｽ	1	
-	04710-04210		HOSE VM330	ﾎｰｽ	1	
-	04710-04220		HOSE VM350	ﾎｰｽ	1	
-	04710-04230		HOSE VM366	ﾎｰｽ	1	
-	04710-04230		HOSE VM370	ﾎｰｽ	1	
-	04710-04230		HOSE VM375	ﾎｰｽ	1	
-	04710-04250		HOSE VM400	ﾎｰｽ	1	
-	04710-04260		HOSE VM425	ﾎｰｽ	1	
-	04710-04275		HOSE VM450	ﾎｰｽ	1	
-	04710-04285		HOSE VM475	ﾎｰｽ	1	
-	04710-04300		HOSE VM500	ﾎｰｽ	1	

FIG.158 MAST PIPING [VM2N9]

(M7028440) マストパイピング

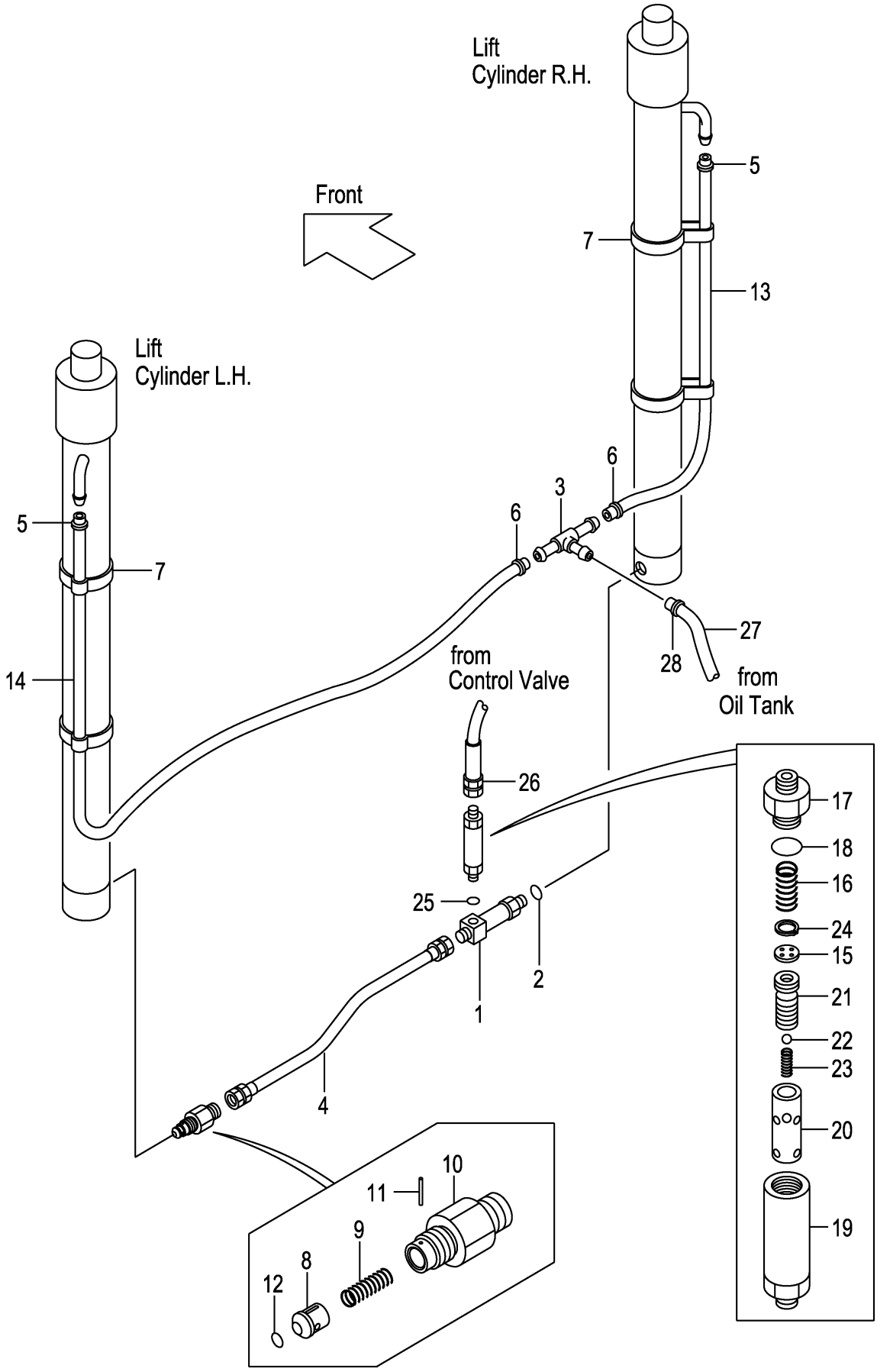

A:VM2N9(3T)

Item No	Part No.	Mark	Description		Req'd	Remarks : Serial No.
-	04710-04330		HOSE VM550	ﾎｰｽ	1	
-	04710-04355		HOSE VM600	ﾎｰｽ	1	
A3	234F8-41001		REGULATOR-ASSY	ﾚｷﾞｭﾚｰﾀｱｯｾﾝ	1	INC.15-24
15	NO PART NO.	#	PLATE	ﾌﾟﾚｰﾄ	1	
16	27979-43101		SPRING	ｽﾌﾟﾘﾝｸﾞ	1	
17	NO PART NO.	#	NIPPLE	ﾆｯﾌﾟﾙ	1	
18	03320-00280		O-RING	Oﾘﾝｸﾞ	1	
19	NO PART NO.	#	CASE	ｹｰｽ	1	
20	NO PART NO.	#	SLEEVE	ｽﾘｰﾌﾞ	1	
21	NO PART NO.	#	PISTON	ﾋﾟｽﾄﾝ	1	
22	24459-42951		BALL,NYLON	ﾎﾞｰﾙ	1	
23	214A8-44151		SPRING	ｽﾌﾟﾘﾝｸﾞ	1	
24	02110-00018		RING,SNAP	ｽﾅｯﾌﾟﾘﾝｸﾞ	1	
25	03320-00180		O-RING	Oﾘﾝｸﾞ	1	
26	277N0-82021		HOSE	ﾎｰｽ	1	
27	04710-04130		HOSE	ﾎｰｽ	1	
28	04911-00021		CLIP	ｸﾘｯﾌﾟ	2	

M E M O

M E M O

FIG.159 FORK [VFM2N9]

(M7028150) フォーク

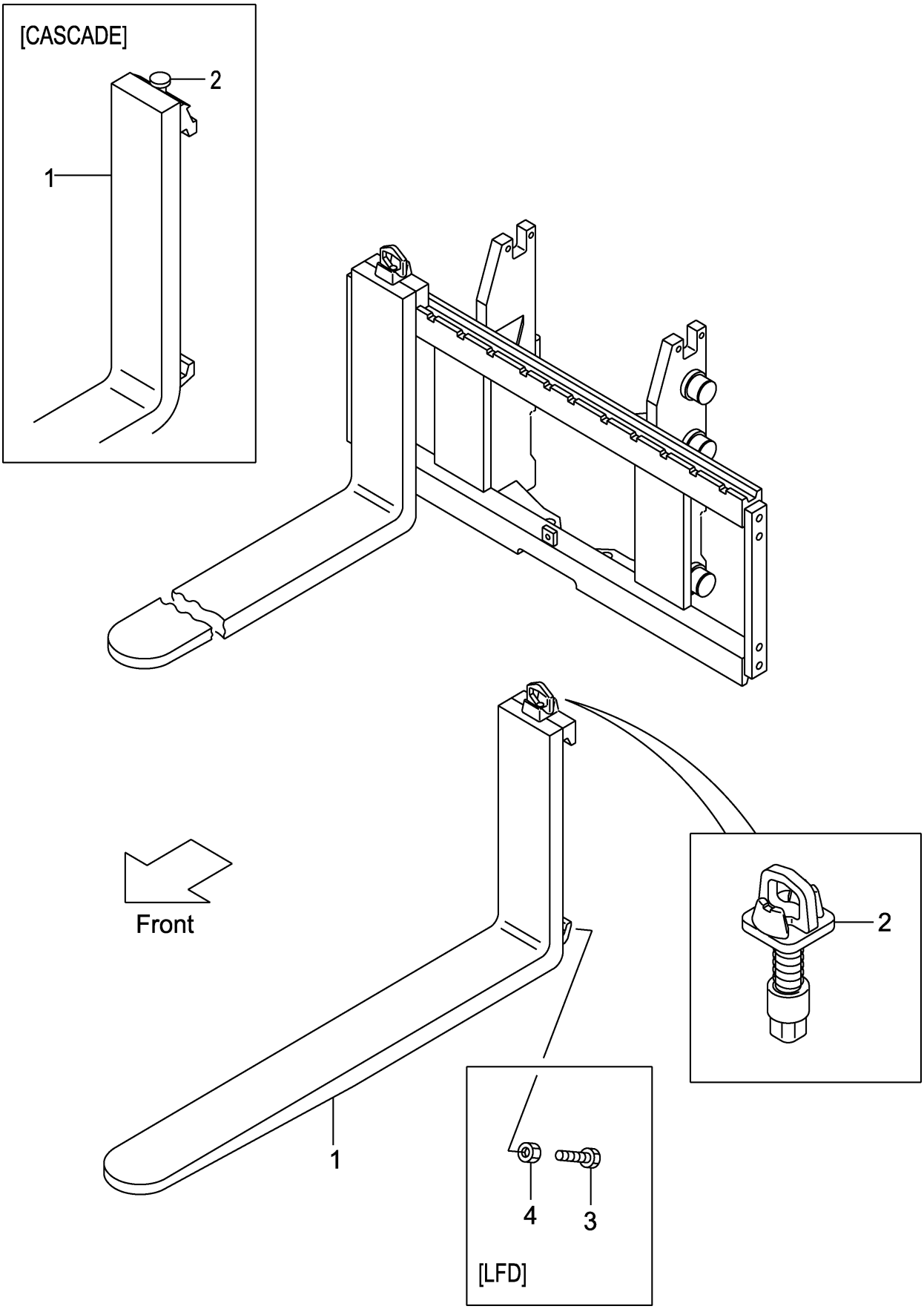

A:VFM2N9(3T)

Item No	Part No.	Mark	Description		Req'd	Remarks : Serial No.
1	214J8-10501		FORK	ﾌｫｰｸ	2	(L=1070) INC.2
-	214J8-10581		FORK	ﾌｫｰｸ	2	[LF100] INC.2
-	214J8-10501		FORK	ﾌｫｰｸ	2	[LF107] INC.2
-	214J8-10591		FORK	ﾌｫｰｸ	2	[LF110] INC.2
-	214J8-10601		FORK	ﾌｫｰｸ	2	[LF120] INC.2
-	214J8-10511		FORK	ﾌｫｰｸ	2	[LF122] INC.2
-	214J8-10611		FORK	ﾌｫｰｸ	2	[LF130] INC.2
-	214J8-10521		FORK	ﾌｫｰｸ	2	[LF137] INC.2
-	214J8-10621		FORK	ﾌｫｰｸ	2	[LF140] INC.2
-	214J8-10631		FORK	ﾌｫｰｸ	2	[LF150] INC.2
-	214J8-10531		FORK	ﾌｫｰｸ	2	[LF152] INC.2
-	214J8-10641		FORK	ﾌｫｰｸ	2	[LF160] INC.2
-	214J8-10541		FORK	ﾌｫｰｸ	2	[LF167] INC.2
-	214J8-10651		FORK	ﾌｫｰｸ	2	[LF170] INC.2
-	214J8-10661		FORK	ﾌｫｰｸ	2	[LF180] INC.2
-	214J8-10551		FORK	ﾌｫｰｸ	2	[LF182] INC.2
-	214J8-10671		FORK	ﾌｫｰｸ	2	[LF190] INC.2
-	214J8-10561		FORK	ﾌｫｰｸ	2	[LF197] INC.2
-	214J8-10681		FORK	ﾌｫｰｸ	2	[LF200] INC.2
-	214J8-10571		FORK	ﾌｫｰｸ	2	[LF212] INC.2
-	234F8-10581		FORK	ﾌｫｰｸ	2	[LFD100] INC.2
-	234F8-10501		FORK	ﾌｫｰｸ	2	[LFD107] INC.2
-	234F8-10591		FORK	ﾌｫｰｸ	2	[LFD110] INC.2
-	234F8-10601		FORK	ﾌｫｰｸ	2	[LFD120] INC.2
-	234F8-10511		FORK	ﾌｫｰｸ	2	[LFD122] INC.2
-	234F8-10611		FORK	ﾌｫｰｸ	2	[LFD130] INC.2
-	234F8-10521		FORK	ﾌｫｰｸ	2	[LFD137] INC.2
-	234F8-10621		FORK	ﾌｫｰｸ	2	[LFD140] INC.2
-	234F8-10631		FORK	ﾌｫｰｸ	2	[LFD150] INC.2
-	234F8-10531		FORK	ﾌｫｰｸ	2	[LFD152] INC.2
-	234F8-10641		FORK	ﾌｫｰｸ	2	[LFD160] INC.2
-	234F8-10541		FORK	ﾌｫｰｸ	2	[LFD167] INC.2
-	234F8-10651		FORK	ﾌｫｰｸ	2	[LFD170] INC.2
-	234F8-10661		FORK	ﾌｫｰｸ	2	[LFD180] INC.2
-	234F8-10551		FORK	ﾌｫｰｸ	2	[LFD182] INC.2
-	234F8-10671		FORK	ﾌｫｰｸ	2	[LFD190] INC.2
-	234F8-10561		FORK	ﾌｫｰｸ	2	[LFD197] INC.2
-	234F8-10681		FORK	ﾌｫｰｸ	2	[LFD200] INC.2
-	234F8-10571		FORK	ﾌｫｰｸ	2	[LFD212] INC.2
-	22N98-10501		FORK	ﾌｫｰｸ	2	[LF107/CASCADE] INC.2
-	22N98-10511		FORK	ﾌｫｰｸ	2	[LF122/CASCADE] INC.2
2	214J8-11002		STOPPER,FORK	ｽﾄｯﾊﾟ	2	
-	W-K3PK-M		KIT,PIN,STOPPER	ｽﾄｯﾊﾟｷｯﾄ	2	[CASCADE]
3	234F8-12101		BOLT	ﾎﾞﾙﾄ	4	[LFD]
4	01402-00010		NUT	ﾅｯﾄ	4	[LFD]

FIG.160 LIFT BRACKET [VFM2N9]

(M7020620) ﾘﾌﾄﾌﾞﾗｹｯﾄ

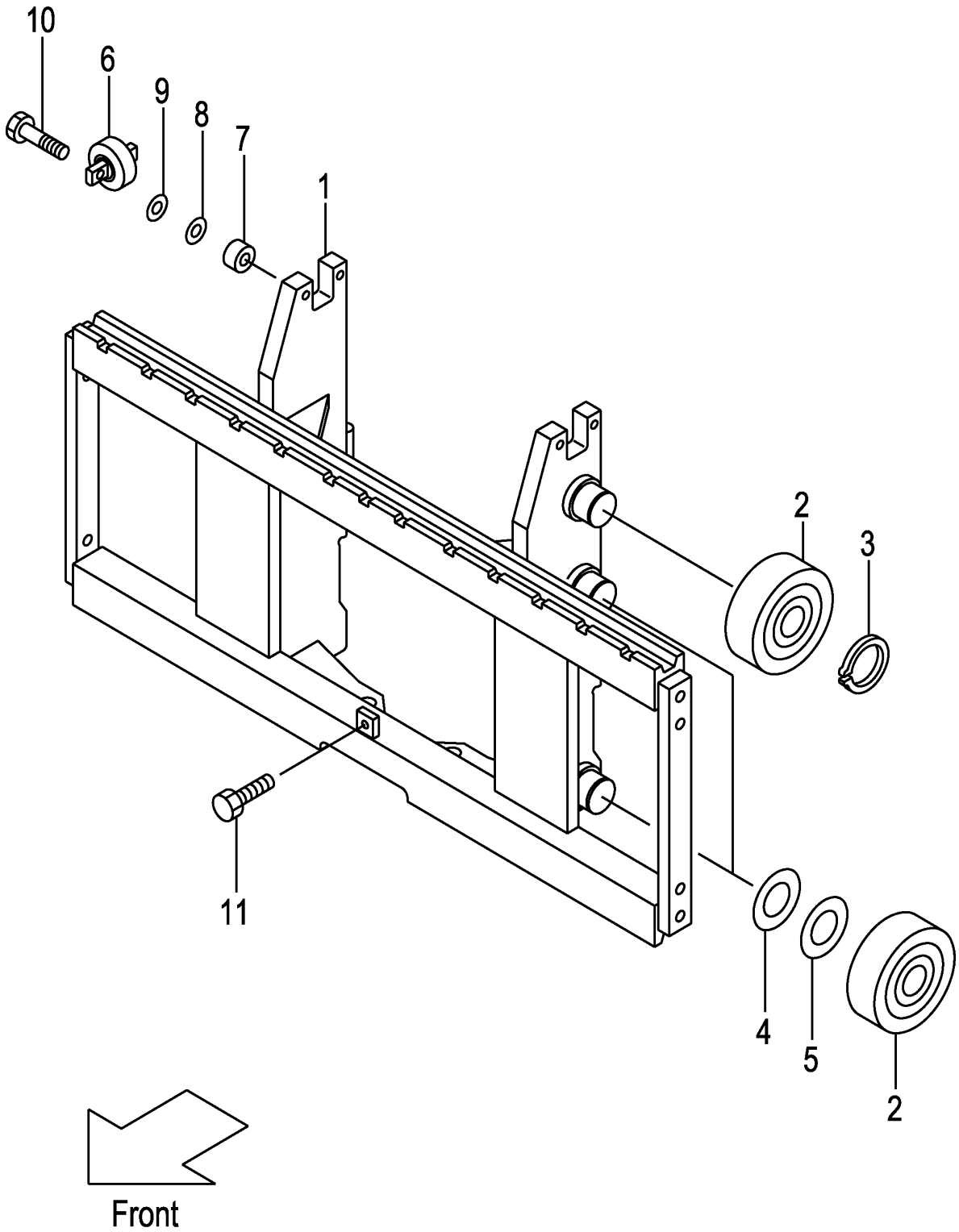

A:VFM2N9(3T)

Item No	Part No.	Mark	Description		Req'd	Remarks : Serial No.
1	22N90-60201		BRACKET,LIFT	ﾌﾞﾗｹｯﾄ	1	
-	52N91-61201		BRACKET,LIFT	ﾌﾞﾗｹｯﾄ	1	[WFX110][WFX114][WFX127] [WFX135][WFX138]
-	52N91-61211		BRACKET,LIFT	ﾌﾞﾗｹｯﾄ	1	[WFX135][WFX138][WFX145] [WFX146][WFX154][WFX180]
2	277P8-22051		ROLLER,END,119.0	ﾛｰﾗ	6	
-	577P3-74001		ROLLER,END,119.0	ﾛｰﾗ	6	[FC][CS35][FCS35][FCS45] [FCS55]
-	277P8-22061		ROLLER,END,119.5	ﾛｰﾗ	(6)	
-	577P3-74011		ROLLER,END,119.5	ﾛｰﾗ	(6)	[FC][CS35][FCS35][FCS45] [FCS55]
3	02100-00045		RING,SNAP	ｽﾅｯﾌﾟﾘﾝｸﾞ	2	
4	277P8-22071		SHIM,T-0.5	ｼﾑ	5	
5	277P8-22081		SHIM,T-1.0	ｼﾑ	5	
6	22N58-32701		ROLLER,SIDE	ﾛｰﾗ	2	
-	52N53-74001		ROLLER,SIDE	ﾛｰﾗ	2	[CS][FC][CS35][FCS35][FCS45] [FCS55]
7	22N58-32711		SPACER	ｽﾍﾟｰｻ	4	
8	22018-30261		SHIM,T-0.5	ｼﾑ	5	
9	22018-30121		SHIM,T-1.0	ｼﾑ	5	
10	01103-10045		BOLT	ﾎﾞﾙﾄ	4	
11	01184-12025		BOLT	ﾎﾞﾙﾄ	1	

FIG.161 BACKREST [VFM2N9]

(M7028260) ﾊﾞｯｸﾚｽﾄ

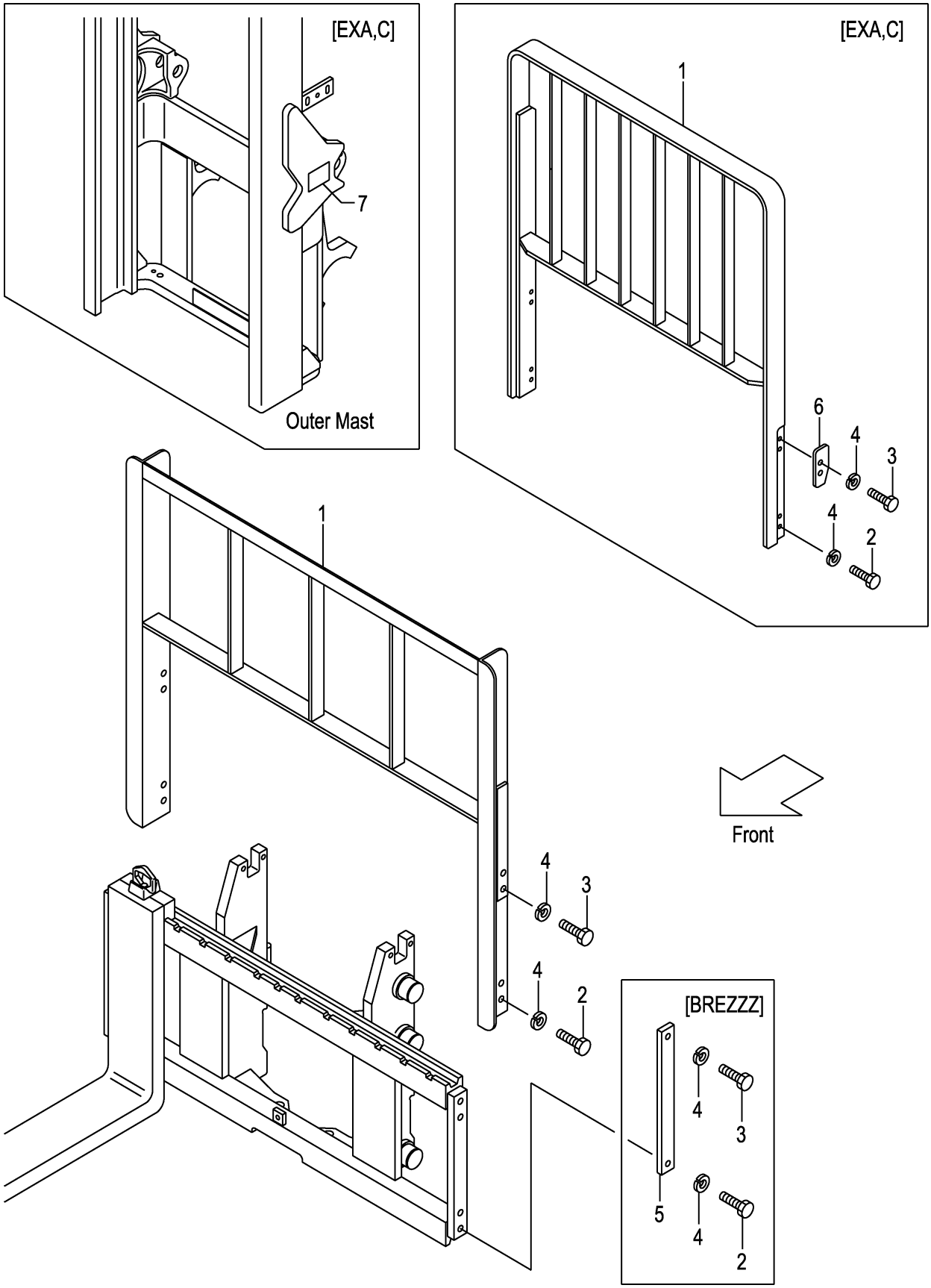

A:VFM2N9(3T)

Item No	Part No.	Mark	Description		Req'd	Remarks : Serial No.
1	234F8-22201		BACKREST	ﾊﾞｯｸﾚｽﾄ	1	
-	234F8-22101		BACKREST	ﾊﾞｯｸﾚｽﾄ	1	[HBR130]
-	234F8-22111		BACKREST	ﾊﾞｯｸﾚｽﾄ	1	[HBR140]
-	234F8-22121		BACKREST	ﾊﾞｯｸﾚｽﾄ	1	[HBR150]
-	534F1-64401		BACKREST	ﾊﾞｯｸﾚｽﾄ	1	[WFX138][EXA/WFX138] [EXC/WFX138]
-	534F1-64411		BACKREST	ﾊﾞｯｸﾚｽﾄ	1	[WFX154][EXA/WFX154] [EXC/WFX154]
-	534F2-74001		BACKREST	ﾊﾞｯｸﾚｽﾄ	1	[EXA][EXC]
2	01100-14025		BOLT	ﾎﾞﾙﾄ	4	
-	01100-14030		BOLT	ﾎﾞﾙﾄ	4	[HBR]
-	01100-14025		BOLT	ﾎﾞﾙﾄ	4	[EXA][EXC]
-	01100-14025		BOLT	ﾎﾞﾙﾄ	2	[BREZZZ]
3	01100-14030		BOLT	ﾎﾞﾙﾄ	4	
-	01100-14030		BOLT	ﾎﾞﾙﾄ	4	[HBR]
-	01100-14035		BOLT	ﾎﾞﾙﾄ	4	[EXA][EXC]
-	01100-14025		BOLT	ﾎﾞﾙﾄ	2	[BREZZZ]
4	02010-00014		WASHER	ﾜｯｼｬ	8	
5	24450-92021		PLATE,SIDE	ﾌﾟﾚｰﾄ	2	[BREZZZ]
6	534A2-74051		PLATE,STOPPER	ﾌﾟﾚｰﾄ	2	[EXA][EXC]
7	534A2-74301		DECAL,CAUTION	ﾃﾞｶﾙ	1	[EXA][EXC]

FIG.162 MAST [VFM2N9]

(M7020430) マスト

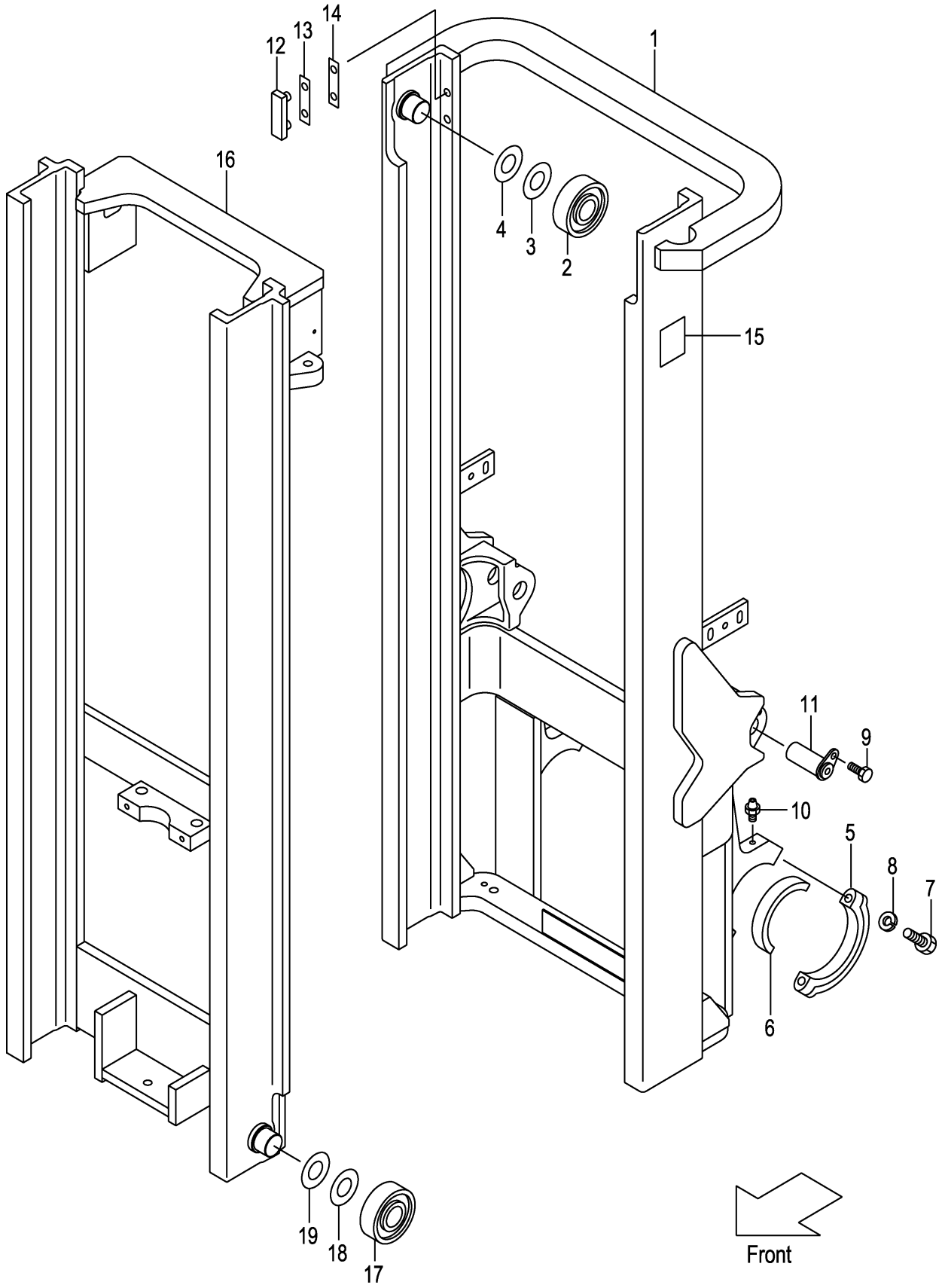

A:VFM2N9(3T)

Item No	Part No.	Mark	Description		Req'd	Remarks : Serial No.
1	22N90-40211		MAST,OUTER VFM200	ｱｳﾀﾏｽﾄ	1	
-	22N90-40221		MAST,OUTER VFM225	ｱｳﾀﾏｽﾄ	1	
-	22N90-40231		MAST,OUTER VFM250	ｱｳﾀﾏｽﾄ	1	
-	22N90-40241		MAST,OUTER VFM270	ｱｳﾀﾏｽﾄ	1	
-	22N90-40251		MAST,OUTER VFM275	ｱｳﾀﾏｽﾄ	1	
-	22N90-40201		MAST,OUTER VFM300	ｱｳﾀﾏｽﾄ	1	
-	22N90-40261		MAST,OUTER VFM325	ｱｳﾀﾏｽﾄ	1	
-	22N90-40271		MAST,OUTER VFM330	ｱｳﾀﾏｽﾄ	1	
-	22N90-40281		MAST,OUTER VFM350	ｱｳﾀﾏｽﾄ	1	
-	22N90-40291		MAST,OUTER VFM366	ｱｳﾀﾏｽﾄ	1	
-	22N90-40301		MAST,OUTER VFM370	ｱｳﾀﾏｽﾄ	1	
-	22N90-40311		MAST,OUTER VFM375	ｱｳﾀﾏｽﾄ	1	
-	22N90-40321		MAST,OUTER VFM400	ｱｳﾀﾏｽﾄ	1	
-	22N90-40331		MAST,OUTER VFM425	ｱｳﾀﾏｽﾄ	1	
-	22N90-40341		MAST,OUTER VFM450	ｱｳﾀﾏｽﾄ	1	
-	22N90-40351		MAST,OUTER VFM475	ｱｳﾀﾏｽﾄ	1	
-	22N90-40361		MAST,OUTER VFM500	ｱｳﾀﾏｽﾄ	1	
-	22N90-40371		MAST,OUTER VFM550	ｱｳﾀﾏｽﾄ	1	
-	22N90-40381		MAST,OUTER VFM600	ｱｳﾀﾏｽﾄ	1	
2	277P8-22051		ROLLER,END,119.0	ﾛｰﾗ	2	
-	577P8-74001		ROLLER,END,119.0	ﾛｰﾗ	2	[FC][CS35][FCS35][FCS45] [FCS55]
3	277P8-22071		SHIM,T-0.5	ｼﾑ	12	
4	277P8-22081		SHIM,T-1.0	ｼﾑ	12	
5	277P8-32701		CAP	ｷｬｯﾌﾟ	2	
6	214A8-02201		BUSHING	ﾌﾞｯｼﾝｸﾞ	2	
7	01103-16065		BOLT	ﾎﾞﾙﾄ	4	
8	02011-00016		WASHER	ﾜｯｼｬ	4	
9	216G8-52301		BOLT	ﾎﾞﾙﾄ	2	
10	04901-00100		FITTING	ﾌｨｯﾃｨﾝｸﾞ	2	
11	272K8-52201		PIN	ﾋﾟﾝ	2	
12	216G8-33401		SLIPPER	ｽﾘｯﾊﾟ	2	
13	216G8-33361		SHIM,T-0.5	ｼﾑ	8	
14	216G8-33371		SHIM,T-1.0	ｼﾑ	4	
15	23678-06002		PLATE,NAME	ﾌﾟﾚｰﾄ	1	
16	22N90-40411		MAST,INNER VFM200	ｲﾝﾅﾏｽﾄ	1	
-	22N90-40421		MAST,INNER VFM225	ｲﾝﾅﾏｽﾄ	1	
-	22N90-40431		MAST,INNER VFM250	ｲﾝﾅﾏｽﾄ	1	
-	22N90-40441		MAST,INNER VFM270	ｲﾝﾅﾏｽﾄ	1	
-	22N90-40451		MAST,INNER VFM275	ｲﾝﾅﾏｽﾄ	1	
-	22N90-40401		MAST,INNER VFM300	ｲﾝﾅﾏｽﾄ	1	
-	22N90-40461		MAST,INNER VFM325	ｲﾝﾅﾏｽﾄ	1	
-	22N90-40471		MAST,INNER VFM330	ｲﾝﾅﾏｽﾄ	1	
-	22N90-40481		MAST,INNER VFM350	ｲﾝﾅﾏｽﾄ	1	
-	22N90-40491		MAST,INNER VFM366	ｲﾝﾅﾏｽﾄ	1	
-	22N90-40501		MAST,INNER VFM370	ｲﾝﾅﾏｽﾄ	1	
-	22N90-40511		MAST,INNER VFM375	ｲﾝﾅﾏｽﾄ	1	
-	22N90-40521		MAST,INNER VFM400	ｲﾝﾅﾏｽﾄ	1	
-	22N90-40531		MAST,INNER VFM425	ｲﾝﾅﾏｽﾄ	1	
-	22N90-40541		MAST,INNER VFM450	ｲﾝﾅﾏｽﾄ	1	

FIG.162 MAST [VFM2N9]

(M7020430) マスト

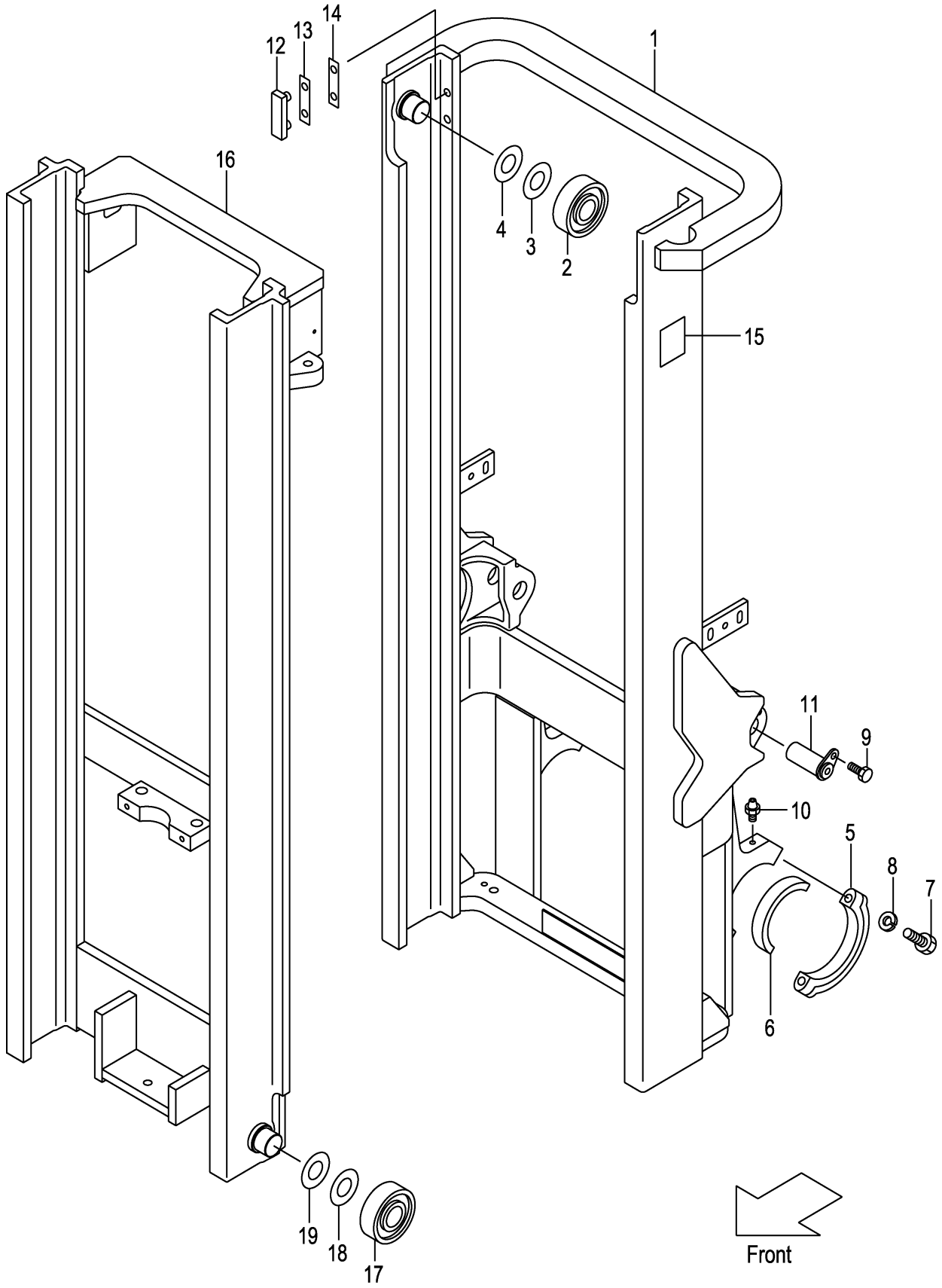

A:VFM2N9(3T)

Item No	Part No.	Mark	Description		Req'd	Remarks : Serial No.
-	22N90-40551		MAST,INNER VFM475	ｲﾝﾅﾏｽﾄ	1	
-	22N90-40561		MAST,INNER VFM500	ｲﾝﾅﾏｽﾄ	1	
-	22N90-40571		MAST,INNER VFM550	ｲﾝﾅﾏｽﾄ	1	
17	277P8-22051		ROLLER,END,119.0	ﾛｰﾗ	2	
-	277P8-22061		ROLLER,END,119.5	ﾛｰﾗ	(2)	
-	577P3-74001		ROLLER,END,119.0	ﾛｰﾗ	2	[FC][CS35][FCS35][FCS45] [FCS55]
-	577P3-74011		ROLLER,END,119.5	ﾛｰﾗ	(2)	[FC][CS35][FCS35][FCS45] [FCS55]
18	277P8-22071		SHIM,T-0.5	ｼﾑ	12	
19	277P8-22081		SHIM,T-1.0	ｼﾑ	12	

M E M O

M E M O

FIG.163 TILT GAUGE [VFM2N9/(TG,PPC,PR,PRC,MPC)]

(M7020440) ﾃｨﾙﾄｹﾞｰｼﾞ

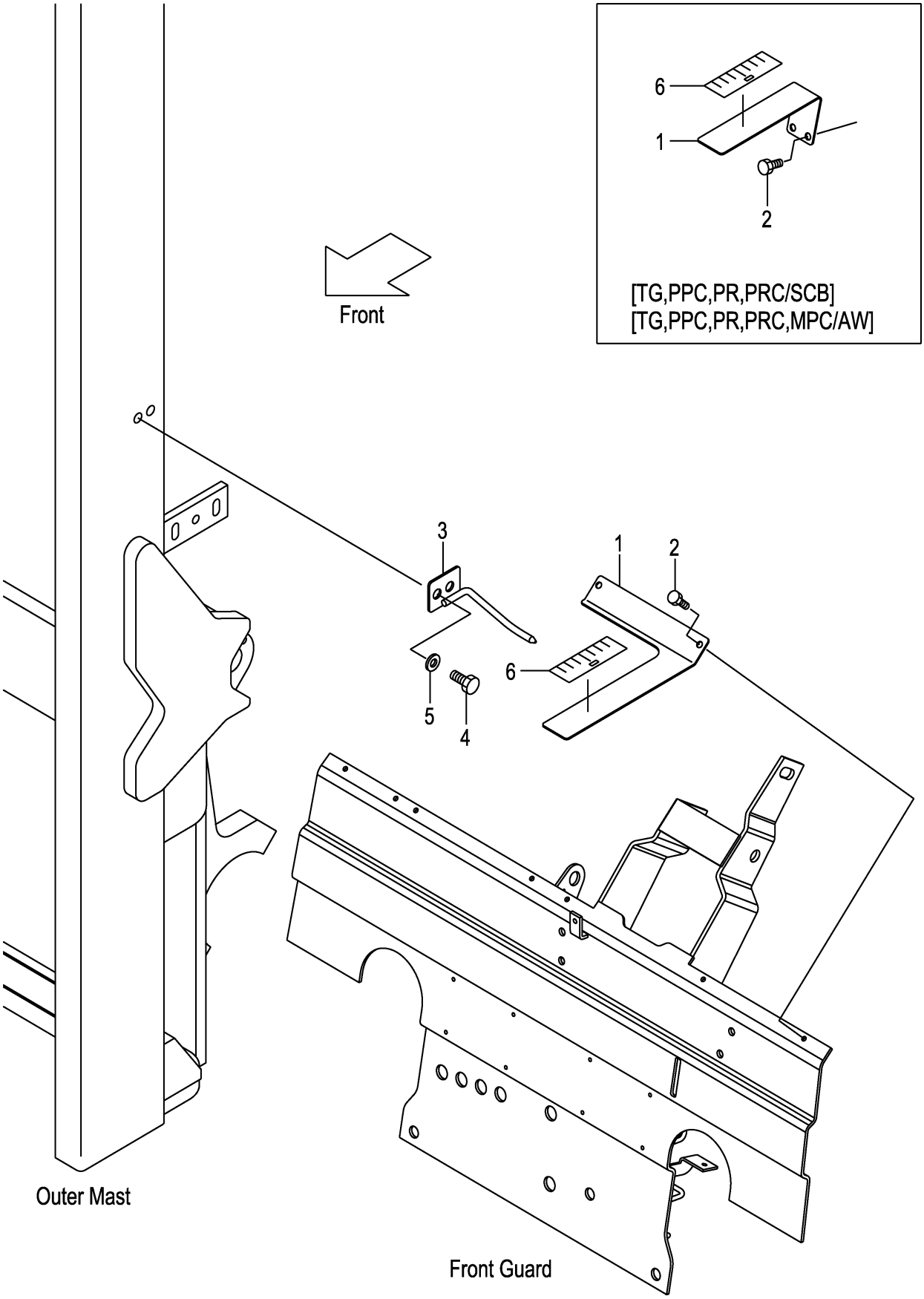

A:VFM2N9(3T)

Item No	Part No.	Mark	Description		Req'd	Remarks : Serial No.
1	62A89-21811		GAUGE,TILT	ｹﾞｰｼﾞ	1	[VFM250-600/ (TG,PRC,PPC,MPC,PR)]
-	62A89-21831		GAUGE,TILT	ｹﾞｰｼﾞ	1	[VFM250-600/SCB/ (TG,PR,PPC,PRC)]
-	62A89-21831		GAUGE,TILT	ｹﾞｰｼﾞ	1	[VFM250-600/AW/ (TG,PR,PPC,PRC,MPC)]
2	01183-06020		BOLT	ﾎﾞﾙﾄ	2	[VFM250-600/] (TG,PRC,PPC,MPC,PR)]
-	01183-06020		BOLT	ﾎﾞﾙﾄ	2	[VFM250-600/SCB/ (TG,PR,PPC,PRC)]
-	01183-06020		BOLT	ﾎﾞﾙﾄ	2	[VFM250-600/AW/ (TG,PR,PPC,PRC,MPC)]
3	62A89-21851		INDICATOR	ｲﾝｼﾞｹｰﾀ	1	[VFM250-600/ (TG,PRC,PPC,MPC,PR)]
-	62A89-21851		INDICATOR	ｲﾝｼﾞｹｰﾀ	1	[VFM250-600/SCB/ (TG,PR,PPC,PRC)]
-	62A89-21851		INDICATOR	ｲﾝｼﾞｹｰﾀ	1	[VFM250-600/AW/ (TG,PR,PPC,PRC,MPC)]
4	01184-12025		BOLT	ﾎﾞﾙﾄ	2	[VFM250-600/ (TG,PRC,PPC,MPC,PR)]
-	01184-12025		BOLT	ﾎﾞﾙﾄ	2	[VFM250-600/SCB/ (TG,PR,PPC,PRC)]
-	01184-12025		BOLT	ﾎﾞﾙﾄ	2	[VFM250-600/AW/ (TG,PR,PPC,PRC,MPC)]
5	02000-00012		WASHER	ﾜｯｼｬ	2	[VFM250-600/ (TG,PRC,PPC,MPC,PR)]
-	02000-00012		WASHER	ﾜｯｼｬ	2	[VFM250-600/SCB/ (TG,PR,PPC,PRC)]
-	02000-00012		WASHER	ﾜｯｼｬ	2	[VFM250-600/AW/ (TG,PR,PPC,PRC,MPC)]
6	62459-23371		SEAL,GAUGE	ｼｰﾙ	1	[VFM250-600/ (TG,PRC,PPC,MPC,PR)]
-	62459-23371		SEAL,GAUGE	ｼｰﾙ	1	[VFM250-600/SCB/ (TG,PR,PPC,PRC)]
-	62459-23371		SEAL,GAUGE	ｼｰﾙ	1	[VFM250-600/AW/ (TG,PR,PPC,PRC,MPC)]

FIG.164 LIFT CYLINDER (FRONT) [VFM2N9]

(M7020540) リフトシリンダ(フロント)

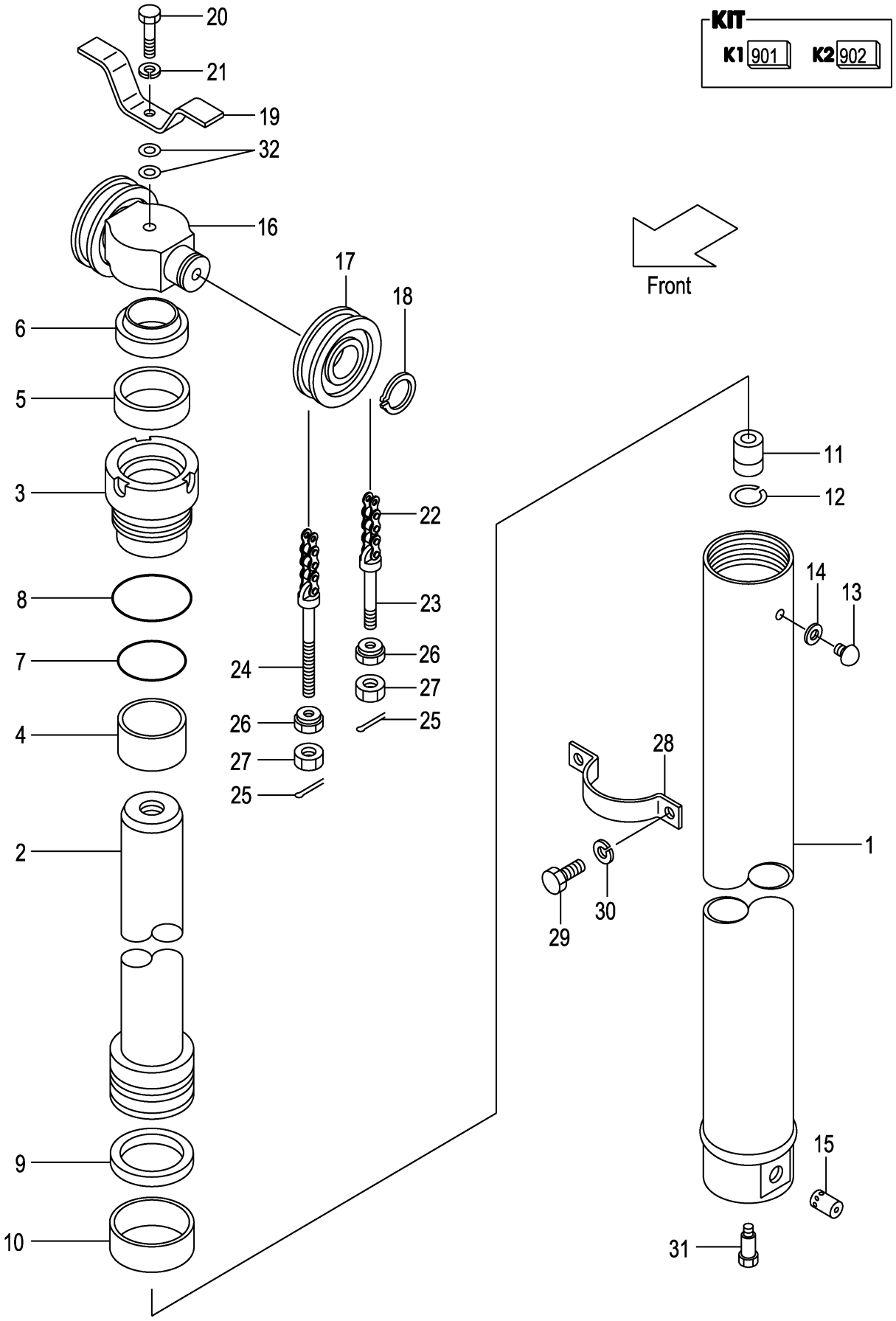

A:VFM2N9(3T)

Item No	Part No.	Mark	Description		Req'd	Remarks : Serial No.
A1	22N90-50511		CYL-ASSY,LIFT VFM200	ﾘﾌﾄｼﾘﾝﾀﾞｱｯｾﾝ	1	INC.1-15
-	22N90-50521		CYL-ASSY,LIFT VFM225	ﾘﾌﾄｼﾘﾝﾀﾞｱｯｾﾝ	1	INC.1-15
-	22N90-50531		CYL-ASSY,LIFT VFM250	ﾘﾌﾄｼﾘﾝﾀﾞｱｯｾﾝ	1	INC.1-15
-	212Y0-50511		CYL-ASSY,LIFT VFM270	ﾘﾌﾄｼﾘﾝﾀﾞｱｯｾﾝ	1	INC.1-15
-	212Y0-50521		CYL-ASSY,LIFT VFM275	ﾘﾌﾄｼﾘﾝﾀﾞｱｯｾﾝ	1	INC.1-15
-	212Y0-50501		CYL-ASSY,LIFT VFM300	ﾘﾌﾄｼﾘﾝﾀﾞｱｯｾﾝ	1	INC.1-15
-	212Y0-50531		CYL-ASSY,LIFT VFM325	ﾘﾌﾄｼﾘﾝﾀﾞｱｯｾﾝ	1	INC.1-15
-	212Y0-50541		CYL-ASSY,LIFT VFM330	ﾘﾌﾄｼﾘﾝﾀﾞｱｯｾﾝ	1	INC.1-15
-	212Y0-50551		CYL-ASSY,LIFT VFM350	ﾘﾌﾄｼﾘﾝﾀﾞｱｯｾﾝ	1	INC.1-15
-	212Y0-50561		CYL-ASSY,LIFT VFM366	ﾘﾌﾄｼﾘﾝﾀﾞｱｯｾﾝ	1	INC.1-15
-	212Y0-50571		CYL-ASSY,LIFT VFM370	ﾘﾌﾄｼﾘﾝﾀﾞｱｯｾﾝ	1	INC.1-15
-	212Y0-50581		CYL-ASSY,LIFT VFM375	ﾘﾌﾄｼﾘﾝﾀﾞｱｯｾﾝ	1	INC.1-15
-	212Y0-50591		CYL-ASSY,LIFT VFM400	ﾘﾌﾄｼﾘﾝﾀﾞｱｯｾﾝ	1	INC.1-15
-	212Y0-50601		CYL-ASSY,LIFT VFM425	ﾘﾌﾄｼﾘﾝﾀﾞｱｯｾﾝ	1	INC.1-15
-	212Y0-50611		CYL-ASSY,LIFT VFM450	ﾘﾌﾄｼﾘﾝﾀﾞｱｯｾﾝ	1	INC.1-15
-	212Y0-50621		CYL-ASSY,LIFT VFM475	ﾘﾌﾄｼﾘﾝﾀﾞｱｯｾﾝ	1	INC.1-15
-	212Y0-50631		CYL-ASSY,LIFT VFM500	ﾘﾌﾄｼﾘﾝﾀﾞｱｯｾﾝ	1	INC.1-15
-	212Y0-50641		CYL-ASSY,LIFT VFM550	ﾘﾌﾄｼﾘﾝﾀﾞｱｯｾﾝ	1	INC.1-15
-	212Y0-50651		CYL-ASSY,LIFT VFM600	ﾘﾌﾄｼﾘﾝﾀﾞｱｯｾﾝ	1	INC.1-15
901	B-B685B-00005	K1	KIT,HEAD	ﾍｯﾄﾞｷｯﾄ	1	INC.3,4
902	B-B685A-00007	K2	KIT,REPAIR	ﾘﾍﾟｱｷｯﾄ	1	INC.5-10,14
1	B-B6727-18201		BODY,CYL VFM200	ﾎﾞﾃﾞｨ	1	
-	B-B6727-18301		BODY,CYL VFM225	ﾎﾞﾃﾞｨ	1	
-	B-B6727-18401		BODY,CYL VFM250	ﾎﾞﾃﾞｨ	1	
-	B-B6727-04601		BODY,CYL VFM270	ﾎﾞﾃﾞｨ	1	
-	B-B6727-04701		BODY,CYL VFM275	ﾎﾞﾃﾞｨ	1	
-	B-B6727-04801		BODY,CYL VFM300	ﾎﾞﾃﾞｨ	1	
-	B-B6727-04901		BODY,CYL VFM325	ﾎﾞﾃﾞｨ	1	
-	B-B6727-05001		BODY,CYL VFM330	ﾎﾞﾃﾞｨ	1	
-	B-B6727-05101		BODY,CYL VFM350	ﾎﾞﾃﾞｨ	1	
-	B-B6727-05201		BODY,CYL VFM366	ﾎﾞﾃﾞｨ	1	
-	B-B6727-05301		BODY,CYL VFM370	ﾎﾞﾃﾞｨ	1	
-	B-B6727-05401		BODY,CYL VFM375	ﾎﾞﾃﾞｨ	1	
-	B-B6727-05501		BODY,CYL VFM400	ﾎﾞﾃﾞｨ	1	
-	B-B6727-05601		BODY,CYL VFM425	ﾎﾞﾃﾞｨ	1	
-	B-B6727-05701		BODY,CYL VFM450	ﾎﾞﾃﾞｨ	1	
-	B-B6727-05801		BODY,CYL VFM475	ﾎﾞﾃﾞｨ	1	
-	B-B6727-05901		BODY,CYL VFM500	ﾎﾞﾃﾞｨ	1	
-	B-B6727-06001		BODY,CYL VFM550	ﾎﾞﾃﾞｨ	1	
-	B-B6727-18101		BODY,CYL VFM600	ﾎﾞﾃﾞｨ	1	
2	B-B6727-18202		ROD VFM200	ﾛｯﾄﾞ	1	
-	B-B6727-18302		ROD VFM225	ﾛｯﾄﾞ	1	
-	B-B6727-18402		ROD VFM250	ﾛｯﾄﾞ	1	
-	B-B6727-04602		ROD VFM270	ﾛｯﾄﾞ	1	
-	B-B6727-04702		ROD VFM275	ﾛｯﾄﾞ	1	
-	B-B6727-04802		ROD VFM300	ﾛｯﾄﾞ	1	
-	B-B6727-04902		ROD VFM325	ﾛｯﾄﾞ	1	
-	B-B6727-05002		ROD VFM330	ﾛｯﾄﾞ	1	
-	B-B6727-05102		ROD VFM350	ﾛｯﾄﾞ	1	
-	B-B6727-05202		ROD VFM366	ﾛｯﾄﾞ	1	

FIG.164 LIFT CYLINDER (FRONT) [VFM2N9]

(M7020540) リフトシリンダ(フロント)

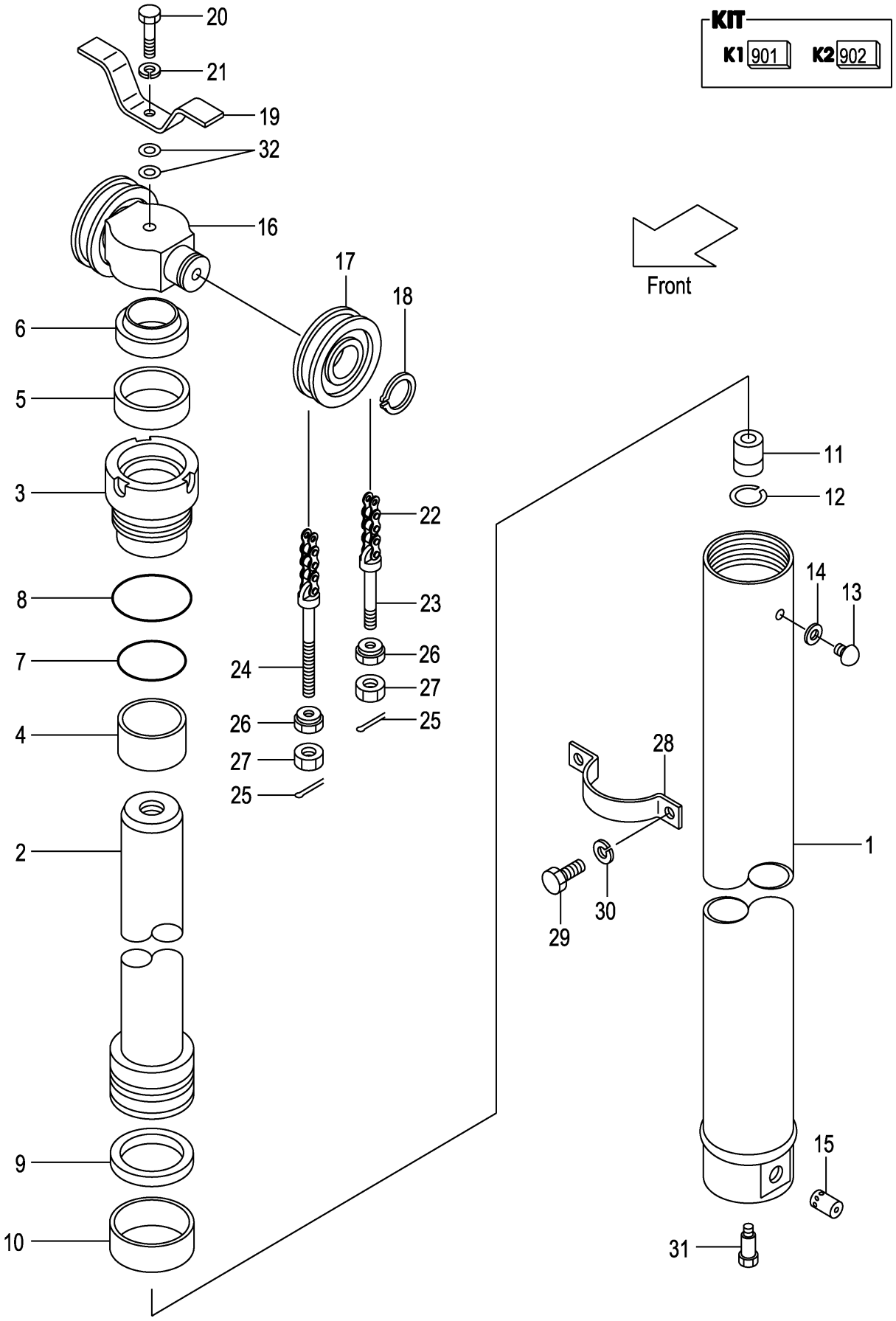

A:VFM2N9(3T)

Item No	Part No.	Mark	Description		Req'd	Remarks : Serial No.
-	B-B6727-05302		ROD VFM370	ﾛｯﾄﾞ	1	
-	B-B6727-05402		ROD VFM375	ﾛｯﾄﾞ	1	
-	B-B6727-05502		ROD VFM400	ﾛｯﾄﾞ	1	
-	B-B6727-05602		ROD VFM425	ﾛｯﾄﾞ	1	
-	B-B6727-05702		ROD VFM450	ﾛｯﾄﾞ	1	
-	B-B6727-05802		ROD VFM475	ﾛｯﾄﾞ	1	
-	B-B6727-05902		ROD VFM500	ﾛｯﾄﾞ	1	
-	B-B6727-06002		ROD VFM550	ﾛｯﾄﾞ	1	
-	B-B6727-18102		ROD VFM600	ﾛｯﾄﾞ	1	
3	B-B6121-85007	*	HEAD	ﾍｯﾄﾞ	1	
4	B-30131-65012	*	BUSHING	ﾌﾞｯｼﾝｸﾞ	1	
5	B-30961-65013	*	U-RING	Uﾘﾝｸﾞ	1	
6	B-30191-65050	*	RING,WIPER	ﾘﾝｸﾞ	1	
7	B-95123-08000	*	O-RING	Oﾘﾝｸﾞ	1	
8	B-95151-08500	*	O-RING	Oﾘﾝｸﾞ	1	
9	B-B6983-85007	*	RING,SEAL	ﾘﾝｸﾞ	1	
10	B-30181-85002	*	RING,SLIDE	ﾘﾝｸﾞ	1	
11	B-C4300-22001		VALVE,CHECK	ﾊﾞﾙﾌﾞ	1	
12	B-94721-22101		RING,SNAP	ｽﾅｯﾌﾟﾘﾝｸﾞ	1	
13	B-B6521-90004		PLUG	ﾌﾟﾗｸﾞ	1	
14	B-B6711-00001	*	GASKET	ｶﾞｽｹｯﾄ	1	
15	B-26570-30125		VALVE	ﾊﾞﾙﾌﾞ	1	
16	212Y0-82001		HEAD,PISTON	ﾍｯﾄﾞ	1	
17	234A8-43501		SHEAVE	ｼｰﾌﾞ	2	
-	22208-40031		SHEAVE	ｼｰﾌﾞ	2	[FC][FCS35][FCS45][FCS55]
18	02100-00040		RING,SNAP	ｽﾅｯﾌﾟﾘﾝｸﾞ	2	
19	214A0-82681		STOPPER,CHAIN	ｽﾄｯﾊﾟ	1	
20	01100-16075		BOLT	ﾎﾞﾙﾄ	1	
21	02010-00016		WASHER	ﾜｯｼｬ	1	
22	22438-45431		CHAIN,LEAF VFM200	ﾁｪｰﾝ	2	
-	22438-45491		CHAIN,LEAF VFM225	ﾁｪｰﾝ	2	
-	22438-45511		CHAIN,LEAF VFM250	ﾁｪｰﾝ	2	
-	22438-45551		CHAIN,LEAF VFM270	ﾁｪｰﾝ	2	
-	22438-45571		CHAIN,LEAF VFM275	ﾁｪｰﾝ	2	
-	22438-45591		CHAIN,LEAF VFM300	ﾁｪｰﾝ	2	
-	22438-45631		CHAIN,LEAF VFM325	ﾁｪｰﾝ	2	
-	22438-45651		CHAIN,LEAF VFM330	ﾁｪｰﾝ	2	
-	22438-45691		CHAIN,LEAF VFM350	ﾁｪｰﾝ	2	
-	22438-45731		CHAIN,LEAF VFM366	ﾁｪｰﾝ	2	
-	22438-45731		CHAIN,LEAF VFM370	ﾁｪｰﾝ	2	
-	22438-45731		CHAIN,LEAF VFM375	ﾁｪｰﾝ	2	
-	22438-45811		CHAIN,LEAF VFM400	ﾁｪｰﾝ	2	
-	22438-45851		CHAIN,LEAF VFM425	ﾁｪｰﾝ	2	
-	22438-45911		CHAIN,LEAF VFM450	ﾁｪｰﾝ	2	
-	22438-45951		CHAIN,LEAF VFM475	ﾁｪｰﾝ	1	
-	22438-46011		CHAIN,LEAF VFM500	ﾁｪｰﾝ	1	
-	22438-46131		CHAIN,LEAF VFM550	ﾁｪｰﾝ	1	
-	22438-46231		CHAIN,LEAF VFM600	ﾁｪｰﾝ	1	
-	09001-10035		CHAIN,ROLLER VFM200	ﾁｪｰﾝ	2	[FC][FCS35][FCS45][FCS55]
-	09001-10039		CHAIN,ROLLER VFM225	ﾁｪｰﾝ	2	[FC][FCS35][FCS45][FCS55]

FIG.164 LIFT CYLINDER (FRONT) [VFM2N9]

(M7020540) リフトシリンダ(フロント)

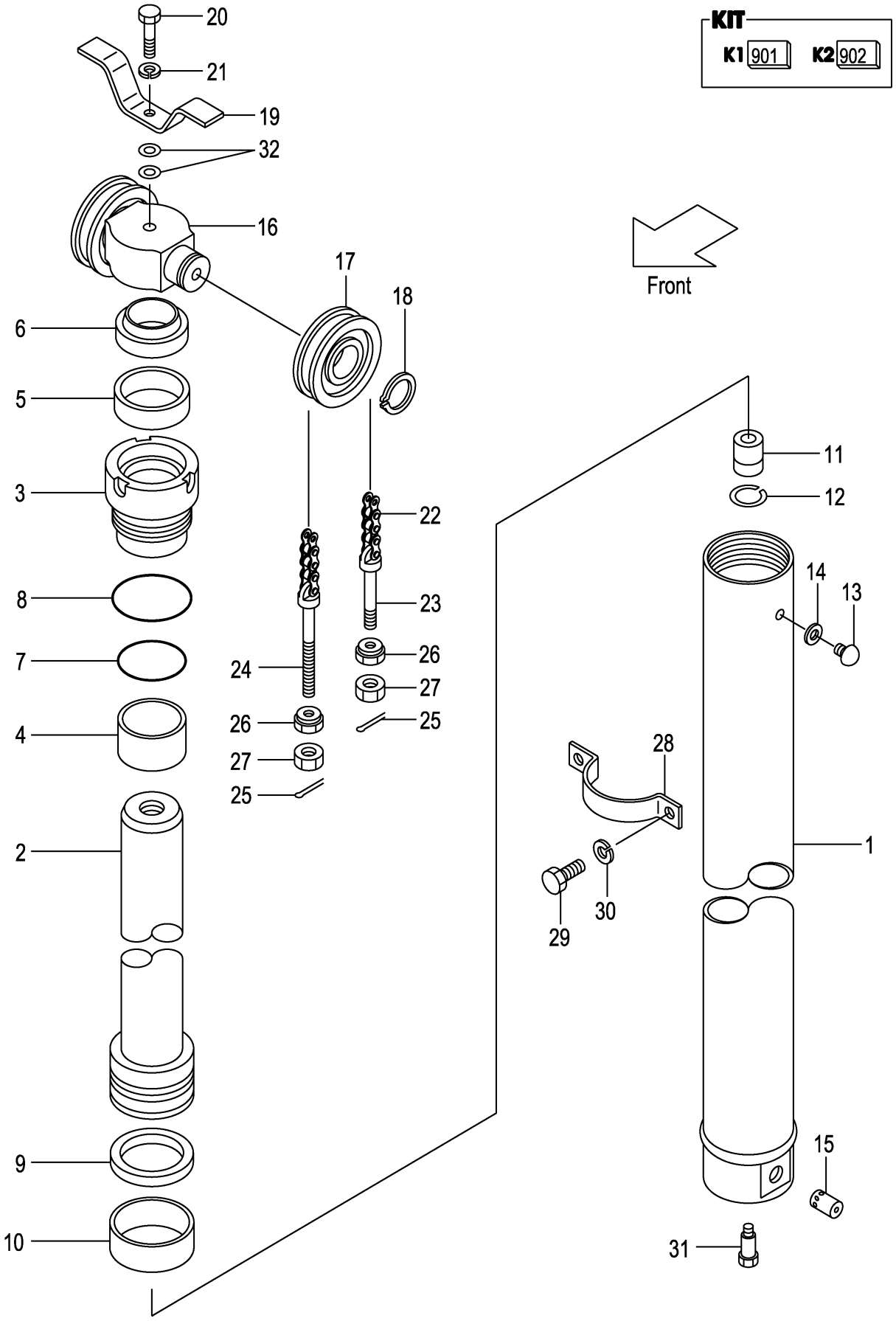

A:VFM2N9(3T)

Item No	Part No.	Mark	Description	Req'd	Remarks : Serial No.
-	09001-10041		CHAIN,ROLLER VFM250 ﾁｪｰﾝ	2	[FC][FCS35][FCS45][FCS55]
-	09001-10045		CHAIN,ROLLER VFM270 ﾁｪｰﾝ	2	[FC][FCS35][FCS45][FCS55]
-	09001-10045		CHAIN,ROLLER VFM275 ﾁｪｰﾝ	2	[FC][FCS35][FCS45][FCS55]
-	09001-10047		CHAIN,ROLLER VFM300 ﾁｪｰﾝ	2	[FC][FCS35][FCS45][FCS55]
-	09001-10051		CHAIN,ROLLER VFM325 ﾁｪｰﾝ	2	[FC][FCS35][FCS45][FCS55]
-	09001-10053		CHAIN,ROLLER VFM330 ﾁｪｰﾝ	2	[FC][FCS35][FCS45][FCS55]
-	09001-10055		CHAIN,ROLLER VFM350 ﾁｪｰﾝ	2	[FC][FCS35][FCS45][FCS55]
-	09001-10057		CHAIN,ROLLER VFM366 ﾁｪｰﾝ	2	[FC][FCS35][FCS45][FCS55]
-	09001-10059		CHAIN,ROLLER VFM370 ﾁｪｰﾝ	2	[FC][FCS35][FCS45][FCS55]
-	09001-10059		CHAIN,ROLLER VFM375 ﾁｪｰﾝ	2	[FC][FCS35][FCS45][FCS55]
-	09001-10065		CHAIN,ROLLER VFM400 ﾁｪｰﾝ	2	[FC][FCS35][FCS45][FCS55]
-	09001-10069		CHAIN,ROLLER VFM425 ﾁｪｰﾝ	2	[FC][FCS35][FCS45][FCS55]
-	09001-10073		CHAIN,ROLLER VFM450 ﾁｪｰﾝ	2	[FC][FCS35][FCS45][FCS55]
-	09001-10077		CHAIN,ROLLER VFM475 ﾁｪｰﾝ	2	[FC][FCS35][FCS45][FCS55]
-	09001-10081		CHAIN,ROLLER VFM500 ﾁｪｰﾝ	2	[FC][FCS35][FCS45][FCS55]
-	09001-10089		CHAIN,ROLLER VFM550 ﾁｪｰﾝ	2	[FC][FCS35][FCS45][FCS55]
-	09001-10097		CHAIN,ROLLER VFM600 ﾁｪｰﾝ	2	[FC][FCS35][FCS45][FCS55]
23	24459-42381		PIN,ANCHOR ﾋﾟﾝ	2	
-	231A0-82001		PIN,ANCHOR ﾋﾟﾝ	2	[FC][FCS35][FCS45][FCS55]
24	24459-42391		PIN,ANCHOR ﾋﾟﾝ	2	
-	22218-42111		PIN,ANCHOR ﾋﾟﾝ	2	[FC][FCS35][FCS45][FCS55]
25	02200-03030		PIN,COTTER ﾋﾟﾝ	4	
26	22218-40191		NUT ﾅｯﾄ	4	
27	01402-00018		NUT ﾅｯﾄ	4	
-	01400-00018		NUT ﾅｯﾄ	4	[FC][FCS35][FCS45][FCS55]
28	212Y0-82101		SUPPORT,CYLINDER ｻﾎﾟｰﾄ	1	
29	01103-10018		BOLT ﾎﾞﾙﾄ	2	
30	02011-00010		WASHER ﾜｯｼｬ	2	
31	214A0-82831		BOLT ﾎﾞﾙﾄ	1	
32	02000-20016		WASHER ﾜｯｼｬ	2	

FIG.165 LIFT CYLINDER (REAR) [VFM2N9]

(M7020550) リフトシリンダ(リヤー)

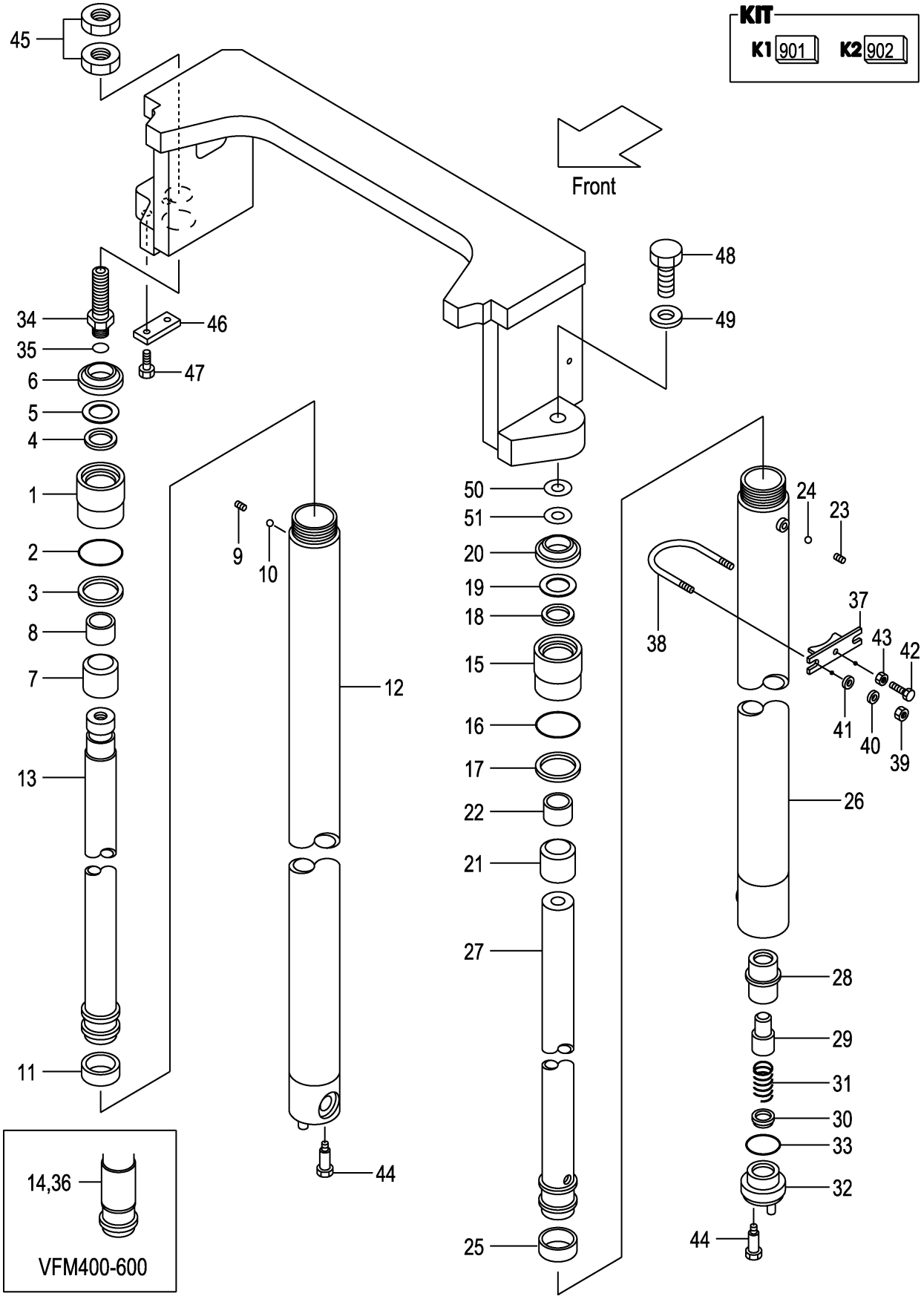

A:VFM2N9(3T)

Item No	Part No.	Mark	Description		Req'd	Remarks : Serial No.
A1	277T0-51611		CYL-ASSY,LIFT,RH VFM200	ﾘﾌﾄｼﾘﾝﾀﾞｱｯｾﾝ	1	INC.1-13,34,35
-	277T0-51621		CYL-ASSY,LIFT,RH VFM225	ﾘﾌﾄｼﾘﾝﾀﾞｱｯｾﾝ	1	INC.1-13,34,35
-	277T0-51631		CYL-ASSY,LIFT,RH VFM250	ﾘﾌﾄｼﾘﾝﾀﾞｱｯｾﾝ	1	INC.1-13,34,35
-	277T0-51641		CYL-ASSY,LIFT,RH VFM270	ﾘﾌﾄｼﾘﾝﾀﾞｱｯｾﾝ	1	INC.1-13,34,35
-	277T0-51651		CYL-ASSY,LIFT,RH VFM275	ﾘﾌﾄｼﾘﾝﾀﾞｱｯｾﾝ	1	INC.1-13,34,35
-	277T0-51601		CYL-ASSY,LIFT,RH VFM300	ﾘﾌﾄｼﾘﾝﾀﾞｱｯｾﾝ	1	INC.1-13,34,35
-	277T0-51661		CYL-ASSY,LIFT,RH VFM325	ﾘﾌﾄｼﾘﾝﾀﾞｱｯｾﾝ	1	INC.1-13,34,35
-	277T0-51671		CYL-ASSY,LIFT,RH VFM330	ﾘﾌﾄｼﾘﾝﾀﾞｱｯｾﾝ	1	INC.1-13,34,35
-	277T0-51681		CYL-ASSY,LIFT,RH VFM350	ﾘﾌﾄｼﾘﾝﾀﾞｱｯｾﾝ	1	INC.1-13,34,35
-	277T0-51691		CYL-ASSY,LIFT,RH VFM366	ﾘﾌﾄｼﾘﾝﾀﾞｱｯｾﾝ	1	INC.1-13,34,35
-	277T0-51701		CYL-ASSY,LIFT,RH VFM370	ﾘﾌﾄｼﾘﾝﾀﾞｱｯｾﾝ	1	INC.1-13,34,35
-	277T0-51711		CYL-ASSY,LIFT,RH VFM375	ﾘﾌﾄｼﾘﾝﾀﾞｱｯｾﾝ	1	INC.1-13,34,35
-	277T0-51721		CYL-ASSY,LIFT,RH VFM400	ﾘﾌﾄｼﾘﾝﾀﾞｱｯｾﾝ	1	INC.1-13,34,35
-	277T0-51731		CYL-ASSY,LIFT,RH VFM425	ﾘﾌﾄｼﾘﾝﾀﾞｱｯｾﾝ	1	INC.1-13,34,35
-	277T0-51741		CYL-ASSY,LIFT,RH VFM450	ﾘﾌﾄｼﾘﾝﾀﾞｱｯｾﾝ	1	INC.1-13,34,35
-	277T0-51751		CYL-ASSY,LIFT,RH VFM475	ﾘﾌﾄｼﾘﾝﾀﾞｱｯｾﾝ	1	INC.1-13,34,35
-	277T0-51761		CYL-ASSY,LIFT,RH VFM500	ﾘﾌﾄｼﾘﾝﾀﾞｱｯｾﾝ	1	INC.1-13,34,35
-	277T0-51771		CYL-ASSY,LIFT,RH VFM550	ﾘﾌﾄｼﾘﾝﾀﾞｱｯｾﾝ	1	INC.1-13,34,35
-	277T0-51781		CYL-ASSY,LIFT,RH VFM600	ﾘﾌﾄｼﾘﾝﾀﾞｱｯｾﾝ	1	INC.1-13,34,35
901	234F0-59801	K1	KIT,OVERHAUL	ｵｰﾊﾞﾎｰﾙｷｯﾄ	1	INC.2-6,11
1	234F0-52501		CAP,CYL	ｷｬｯﾌﾟ	1	
2	214A8-42571	*	O-RING	Oﾘﾝｸﾞ	1	
3	214J0-53681	*	RING,BACK-UP	ﾘﾝｸﾞ	1	
4	23918-52161	*	PACKING	ﾊﾟｯｷﾝｸﾞ	1	
5	23918-52171	*	RING,BACK-UP	ﾘﾝｸﾞ	1	
6	214A8-46001	*	SEAL,DUST	ｼｰﾙ	1	
A2	234A8-40611		SLEEVE-ASSY	ｽﾘｰﾌﾞｱｯｾﾝ	1	INC.7,8
7	234A8-42511		SLEEVE	ｽﾘｰﾌﾞ	1	
8	23678-42301		BUSHING	ﾌﾞｯｼﾝｸﾞ	1	
9	234A0-52611		PLUG	ﾌﾟﾗｸﾞ	1	
10	03190-00006		BALL	ﾎﾞｰﾙ	1	

FIG.165 LIFT CYLINDER (REAR) [VFM2N9]

(M7020550) リフトシリンダ(リヤー)

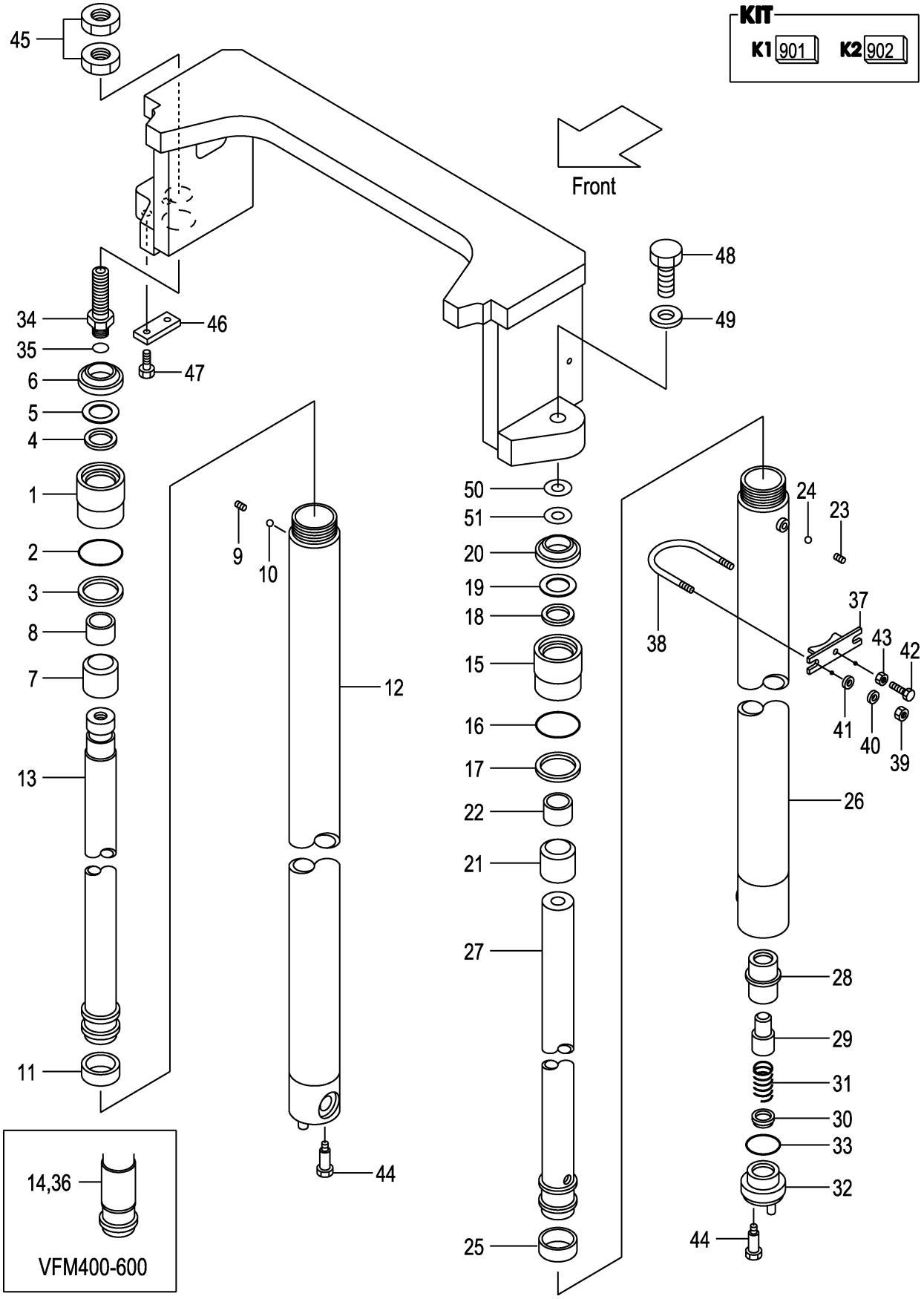

A:VFM2N9(3T)

Item No	Part No.	Mark	Description		Req'd	Remarks : Serial No.
11	27970-53141	*	WEARING	ｳｪｱﾘﾝｸﾞ	1	
12	277T0-51211		BODY,CYL,RH VFM200	ﾎﾞﾃﾞｨ	1	
-	277T0-51221		BODY,CYL,RH VFM225	ﾎﾞﾃﾞｨ	1	
-	277T0-51231		BODY,CYL,RH VFM250	ﾎﾞﾃﾞｨ	1	
-	277T0-51241		BODY,CYL,RH VFM270	ﾎﾞﾃﾞｨ	1	
-	277T0-51251		BODY,CYL,RH VFM275	ﾎﾞﾃﾞｨ	1	
-	277T0-51201		BODY,CYL,RH VFM300	ﾎﾞﾃﾞｨ	1	
-	277T0-51261		BODY,CYL,RH VFM325	ﾎﾞﾃﾞｨ	1	
-	277T0-51271		BODY,CYL,RH VFM330	ﾎﾞﾃﾞｨ	1	
-	277T0-51281		BODY,CYL,RH VFM350	ﾎﾞﾃﾞｨ	1	
-	277T0-51291		BODY,CYL,RH VFM366	ﾎﾞﾃﾞｨ	1	
-	277T0-51301		BODY,CYL,RH VFM370	ﾎﾞﾃﾞｨ	1	
-	277T0-51311		BODY,CYL,RH VFM375	ﾎﾞﾃﾞｨ	1	
-	277T0-51321		BODY,CYL,RH VFM400	ﾎﾞﾃﾞｨ	1	
-	277T0-51331		BODY,CYL,RH VFM425	ﾎﾞﾃﾞｨ	1	
-	277T0-51341		BODY,CYL,RH VFM450	ﾎﾞﾃﾞｨ	1	
-	277T0-51351		BODY,CYL,RH VFM475	ﾎﾞﾃﾞｨ	1	
-	277T0-51361		BODY,CYL,RH VFM500	ﾎﾞﾃﾞｨ	1	
-	277T0-51371		BODY,CYL,RH VFM550	ﾎﾞﾃﾞｨ	1	
-	277T0-51381		BODY,CYL,RH VFM600	ﾎﾞﾃﾞｨ	1	
13	214J0-51711		ROD,PISTON VFM200	ﾛｯﾄﾞ	1	
-	214J0-51721		ROD,PISTON VFM225	ﾛｯﾄﾞ	1	
-	214J0-51731		ROD,PISTON VFM250	ﾛｯﾄﾞ	1	
-	214J0-51741		ROD,PISTON VFM270	ﾛｯﾄﾞ	1	
-	214J0-51751		ROD,PISTON VFM275	ﾛｯﾄﾞ	1	
-	214J0-51701		ROD,PISTON VFM300	ﾛｯﾄﾞ	1	
-	214J0-51761		ROD,PISTON VFM325	ﾛｯﾄﾞ	1	
-	214J0-51771		ROD,PISTON VFM330	ﾛｯﾄﾞ	1	
-	214J0-51781		ROD,PISTON VFM350	ﾛｯﾄﾞ	1	
-	214J0-51791		ROD,PISTON VFM366	ﾛｯﾄﾞ	1	
-	214J0-51801		ROD,PISTON VFM370	ﾛｯﾄﾞ	1	
-	214J0-51811		ROD,PISTON VFM375	ﾛｯﾄﾞ	1	
-	214J0-51821		ROD,PISTON,RH VFM400	ﾛｯﾄﾞ	1	
-	214J0-51831		ROD,PISTON,RH VFM425	ﾛｯﾄﾞ	1	
-	214J0-51841		ROD,PISTON,RH VFM450	ﾛｯﾄﾞ	1	
-	214J0-51851		ROD,PISTON,RH VFM475	ﾛｯﾄﾞ	1	
-	214J0-51861		ROD,PISTON,RH VFM500	ﾛｯﾄﾞ	1	
-	214J0-51871		ROD,PISTON,RH VFM550	ﾛｯﾄﾞ	1	
-	214J0-51881		ROD,PISTON,RH VFM600	ﾛｯﾄﾞ	1	
14	24450-52571		SPACER	ｽﾍﾟｰｻ	1	(VFM400-500)
-	24450-52571		SPACER	ｽﾍﾟｰｻ	2	(VFM550-600)
A3	277T0-51411		CYL-ASSY,LIFT,LH VFM200	ﾘﾌﾄｼﾘﾝﾀﾞｱｯｾﾝ	1	INC.15-33
-	277T0-51421		CYL-ASSY,LIFT,LH VFM225	ﾘﾌﾄｼﾘﾝﾀﾞｱｯｾﾝ	1	INC.15-33
-	277T0-51431		CYL-ASSY,LIFT,LH VFM250	ﾘﾌﾄｼﾘﾝﾀﾞｱｯｾﾝ	1	INC.15-33
-	277T0-51441		CYL-ASSY,LIFT,LH VFM270	ﾘﾌﾄｼﾘﾝﾀﾞｱｯｾﾝ	1	INC.15-33

FIG.165 LIFT CYLINDER (REAR) [VFM2N9]

(M7020550) リフトシリンダ(リヤー)

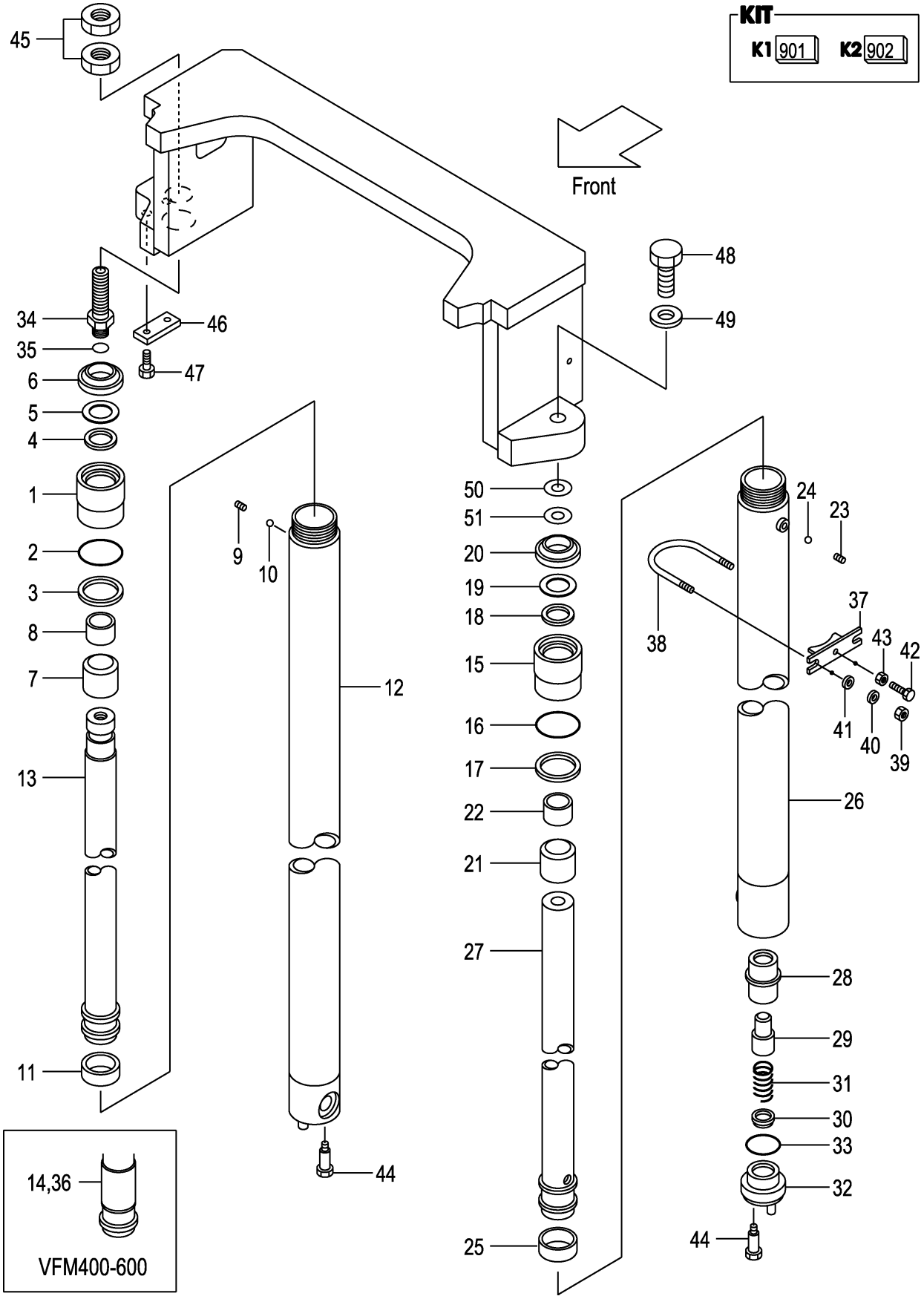

A:VFM2N9(3T)

Item No	Part No.	Mark	Description		Req'd	Remarks : Serial No.
-	277T0-51451		CYL-ASSY,LIFT,LH VFM275	ﾘﾌﾄｼﾘﾝﾀﾞｱｯｾﾝ	1	INC.15-33
-	277T0-51401		CYL-ASSY,LIFT,LH VFM300	ﾘﾌﾄｼﾘﾝﾀﾞｱｯｾﾝ	1	INC.15-33
-	277T0-51461		CYL-ASSY,LIFT,LH VFM325	ﾘﾌﾄｼﾘﾝﾀﾞｱｯｾﾝ	1	INC.15-33
-	277T0-51471		CYL-ASSY,LIFT,LH VFM330	ﾘﾌﾄｼﾘﾝﾀﾞｱｯｾﾝ	1	INC.15-33
-	277T0-51481		CYL-ASSY,LIFT,LH VFM350	ﾘﾌﾄｼﾘﾝﾀﾞｱｯｾﾝ	1	INC.15-33
-	277T0-51491		CYL-ASSY,LIFT,LH VFM366	ﾘﾌﾄｼﾘﾝﾀﾞｱｯｾﾝ	1	INC.15-33
-	277T0-51501		CYL-ASSY,LIFT,LH VFM370	ﾘﾌﾄｼﾘﾝﾀﾞｱｯｾﾝ	1	INC.15-33
-	277T0-51511		CYL-ASSY,LIFT,LH VFM375	ﾘﾌﾄｼﾘﾝﾀﾞｱｯｾﾝ	1	INC.15-33
-	277T0-51521		CYL-ASSY,LIFT,LH VFM400	ﾘﾌﾄｼﾘﾝﾀﾞｱｯｾﾝ	1	INC.15-33,36
-	277T0-51531		CYL-ASSY,LIFT,LH VFM425	ﾘﾌﾄｼﾘﾝﾀﾞｱｯｾﾝ	1	INC.15-33,36
-	277T0-51541		CYL-ASSY,LIFT,LH VFM450	ﾘﾌﾄｼﾘﾝﾀﾞｱｯｾﾝ	1	INC.15-33,36
-	277T0-51551		CYL-ASSY,LIFT,LH VFM475	ﾘﾌﾄｼﾘﾝﾀﾞｱｯｾﾝ	1	INC.15-33,36
-	277T0-51561		CYL-ASSY,LIFT,LH VFM500	ﾘﾌﾄｼﾘﾝﾀﾞｱｯｾﾝ	1	INC.15-33,36
-	277T0-51571		CYL-ASSY,LIFT,LH VFM550	ﾘﾌﾄｼﾘﾝﾀﾞｱｯｾﾝ	1	INC.15-33,36
-	277T0-51581		CYL-ASSY,LIFT,LH VFM600	ﾘﾌﾄｼﾘﾝﾀﾞｱｯｾﾝ	1	INC.15-33,36
902	234F0-59801	K2	KIT,OVERHAUL	ｵｰﾊﾞﾎｰﾙｷｯﾄ	1	INC.16-20,25,33
15	234F0-52501		CAP	ｷｬｯﾌﾟ	1	
16	214A8-42571	*	O-RING	Oﾘﾝｸﾞ	1	
17	214J0-53681	*	RING,BACK-UP	ﾘﾝｸﾞ	1	
18	23918-52161	*	PACKING	ﾊﾟｯｷﾝｸﾞ	1	
19	23918-52171	*	RING,BACK-UP	ﾘﾝｸﾞ	1	
20	214A8-46001	*	SEAL,DUST	ｼｰﾙ	1	
A4	234A8-40611		SLEEVE-ASSY	ｽﾘｰﾌﾞｱｯｾﾝ	1	INC.21,22
21	234A8-42511		SLEEVE	ｽﾘｰﾌﾞ	1	
22	23678-42301		BUSHING	ﾌﾞｯｼﾝｸﾞ	1	
23	234A0-52611		PLUG	ﾌﾟﾗｸﾞ	1	
24	03190-00006		BALL	ﾎﾞｰﾙ	1	
25	27970-53141	*	WEARING	ｳｪｱﾘﾝｸﾞ	1	
26	277T0-51011		BODY,CYL,LH VFM200	ﾎﾞﾃﾞｨ	1	
-	277T0-51021		BODY,CYL,LH VFM225	ﾎﾞﾃﾞｨ	1	
-	277T0-51031		BODY,CYL,LH VFM250	ﾎﾞﾃﾞｨ	1	
-	277T0-51041		BODY,CYL,LH VFM270	ﾎﾞﾃﾞｨ	1	
-	277T0-51051		BODY,CYL,LH VFM275	ﾎﾞﾃﾞｨ	1	
-	277T0-51001		BODY,CYL,LH VFM300	ﾎﾞﾃﾞｨ	1	
-	277T0-51061		BODY,CYL,LH VFM325	ﾎﾞﾃﾞｨ	1	

FIG.165 LIFT CYLINDER (REAR) [VFM2N9]

(M7020550) リフトシリンダ(リヤー)

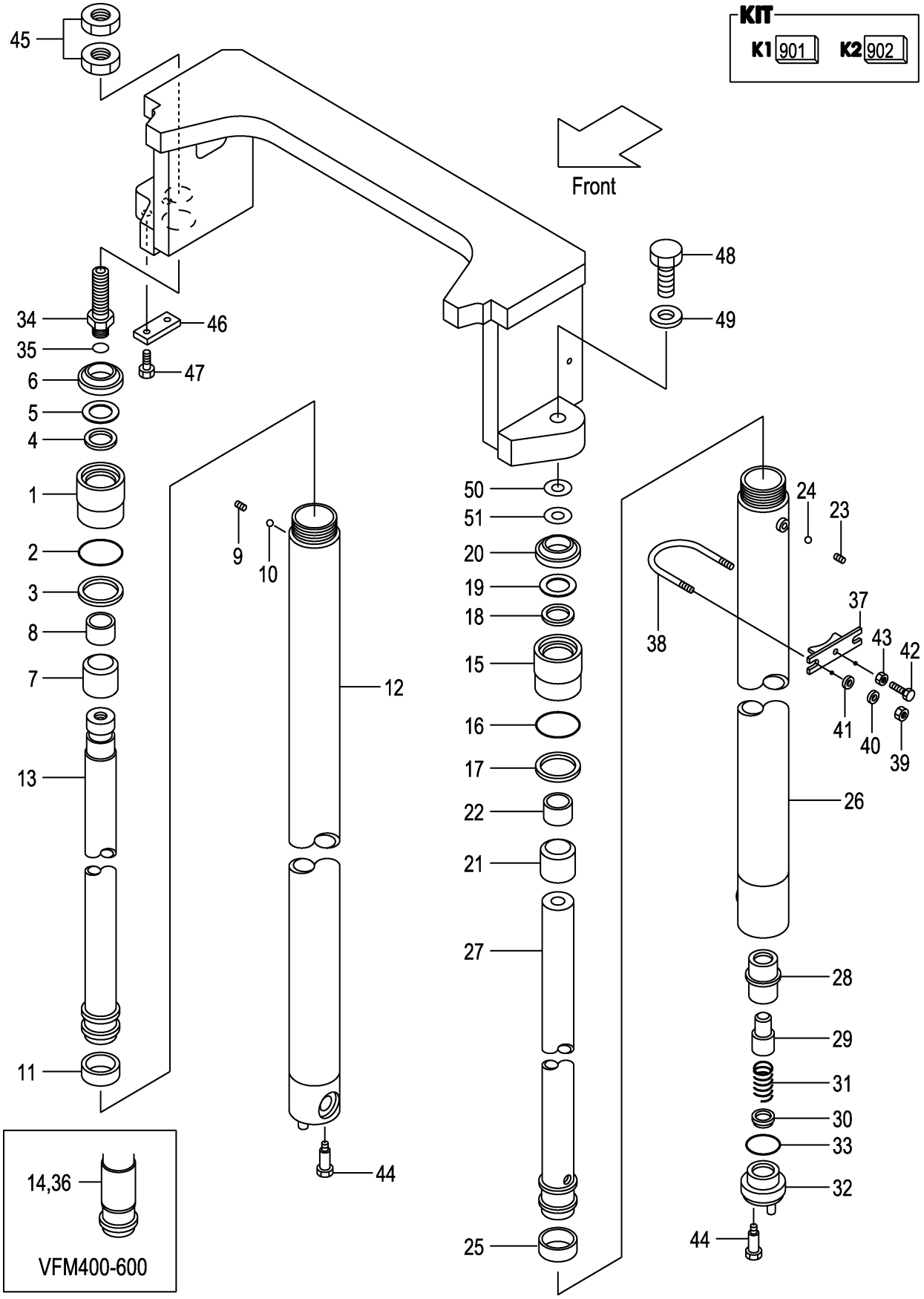

A:VFM2N9(3T)

Item No	Part No.	Mark	Description		Req'd	Remarks : Serial No.
-	277T0-51071		BODY,CYL,LH VFM330	ﾎﾞﾃﾞｨ	1	
-	277T0-51081		BODY,CYL,LH VFM350	ﾎﾞﾃﾞｨ	1	
-	277T0-51091		BODY,CYL,LH VFM366	ﾎﾞﾃﾞｨ	1	
-	277T0-51101		BODY,CYL,LH VFM370	ﾎﾞﾃﾞｨ	1	
-	277T0-51111		BODY,CYL,LH VFM375	ﾎﾞﾃﾞｨ	1	
-	277T0-51121		BODY,CYL,LH VFM400	ﾎﾞﾃﾞｨ	1	
-	277T0-51131		BODY,CYL,LH VFM425	ﾎﾞﾃﾞｨ	1	
-	277T0-51141		BODY,CYL,LH VFM450	ﾎﾞﾃﾞｨ	1	
-	277T0-51151		BODY,CYL,LH VFM475	ﾎﾞﾃﾞｨ	1	
-	277T0-51161		BODY,CYL,LH VFM500	ﾎﾞﾃﾞｨ	1	
-	277T0-51171		BODY,CYL,LH VFM550	ﾎﾞﾃﾞｨ	1	
-	277T0-51181		BODY,CYL,LH VFM600	ﾎﾞﾃﾞｨ	1	
27	229L0-51211		ROD,PISTON,LH VFM200	ﾛｯﾄﾞ	1	
-	229L0-51221		ROD,PISTON,LH VFM225	ﾛｯﾄﾞ	1	
-	229L0-51231		ROD,PISTON,LH VFM250	ﾛｯﾄﾞ	1	
-	229L0-51241		ROD,PISTON,LH VFM270	ﾛｯﾄﾞ	1	
-	229L0-51251		ROD,PISTON,LH VFM275	ﾛｯﾄﾞ	1	
-	229L0-51201		ROD,PISTON,LH VFM300	ﾛｯﾄﾞ	1	
-	229L0-51261		ROD,PISTON,LH VFM325	ﾛｯﾄﾞ	1	
-	229L0-51271		ROD,PISTON,LH VFM330	ﾛｯﾄﾞ	1	
-	229L0-51281		ROD,PISTON,LH VFM350	ﾛｯﾄﾞ	1	
-	229L0-51291		ROD,PISTON,LH VFM366	ﾛｯﾄﾞ	1	
-	229L0-51301		ROD,PISTON,LH VFM370	ﾛｯﾄﾞ	1	
-	229L0-51311		ROD,PISTON,LH VFM375	ﾛｯﾄﾞ	1	
-	229L0-51321		ROD,PISTON,LH VFM400	ﾛｯﾄﾞ	1	
-	229L0-51331		ROD,PISTON,LH VFM425	ﾛｯﾄﾞ	1	
-	229L0-51341		ROD,PISTON,LH VFM450	ﾛｯﾄﾞ	1	
-	229L0-51351		ROD,PISTON,LH VFM475	ﾛｯﾄﾞ	1	
-	229L0-51361		ROD,PISTON,LH VFM500	ﾛｯﾄﾞ	1	
-	229L0-51371		ROD,PISTON,LH VFM550	ﾛｯﾄﾞ	1	
-	229L0-51381		ROD,PISTON,LH VFM600	ﾛｯﾄﾞ	1	
28	53658-43021		SLEEVE	ｽﾘｰﾌﾞ	1	
29	53658-43011		PISTON	ﾋﾟｽﾄﾝ	1	
30	53658-43001		VALVE,CHECK	ﾊﾞﾙﾌﾞ	1	
31	53658-43031		SPRING	ｽﾌﾟﾘﾝｸﾞ	1	
32	53658-43041		PLUG	ﾌﾟﾗｸﾞ	1	
33	03320-00340	*	O-RING	Oﾘﾝｸﾞ	1	
34	214J0-53781		NIPPLE	ﾆｯﾌﾟﾙ	1	
35	03320-00240		O-RING	Oﾘﾝｸﾞ	1	
36	24450-52571		SPACER	ｽﾍﾟｰｻ	1	(VFM400-500)
-	24450-52571		SPACER	ｽﾍﾟｰｻ	2	(VFM550-600)
37	22N58-43011		SUPPORT	ｻﾎﾟｰﾄ	2	(VFM200-375)
-	22N58-43011		SUPPORT	ｻﾎﾟｰﾄ	4	(VFM400-600)
38	234A8-42551		U-BOLT	Uﾎﾞﾙﾄ	2	(VFM200-375)
-	234A8-42551		U-BOLT	Uﾎﾞﾙﾄ	4	(VFM400-600)
39	234A8-42561		NUT	ﾅｯﾄ	4	(VFM200-375)
-	234A8-42561		NUT	ﾅｯﾄ	8	(VFM400-600)
40	02010-20010		WASHER	ﾜｯｼｬ	4	(VFM200-375)
-	02010-20010		WASHER	ﾜｯｼｬ	8	(VFM400-600)
41	02000-20010		WASHER	ﾜｯｼｬ	4	(VFM200-375)

FIG.165 LIFT CYLINDER (REAR) [VFM2N9]

(M7020550) リフトシリンダ(リヤー)

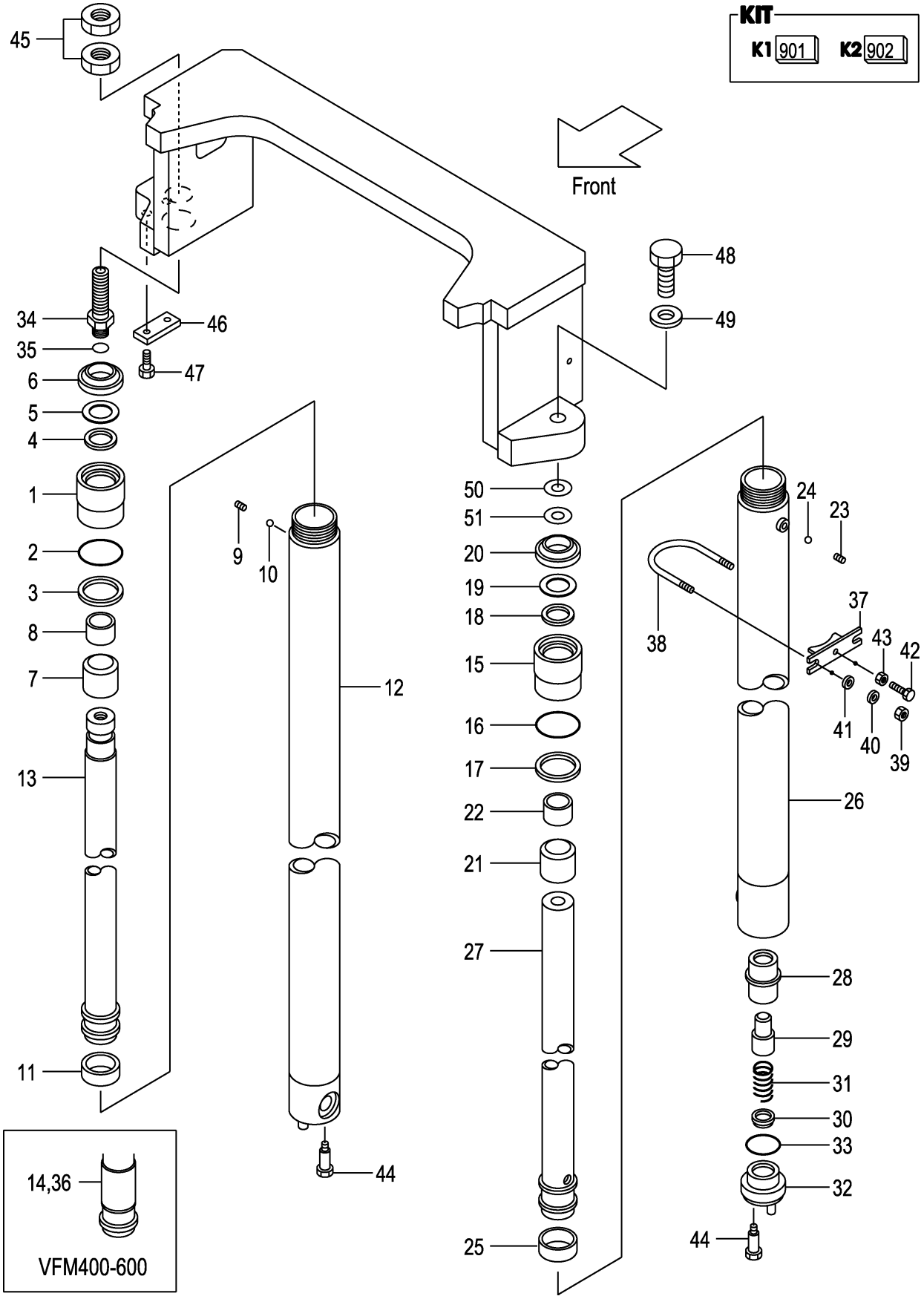

A:VFM2N9(3T)

Item No	Part No.	Mark	Description		Req'd	Remarks : Serial No.
-	02000-20010		WASHER	ﾜｯｼｬ	8	(VFM400-600)
42	232A8-42201		BOLT	ﾎﾞﾙﾄ	2	(VFM200-375)
-	232A8-42201		BOLT	ﾎﾞﾙﾄ	4	(VFM400-600)
43	234A8-42571		NUT	ﾅｯﾄ	2	(VFM200-375)
-	234A8-42571		NUT	ﾅｯﾄ	4	(VFM400-600)
44	214A8-42661		BOLT	ﾎﾞﾙﾄ	2	
45	24320-52001		NUT	ﾅｯﾄ	2	
46	282M8-32501		PLATE,KEY	ﾌﾟﾚｰﾄ	1	
47	01184-10020		BOLT	ﾎﾞﾙﾄ	2	
48	01103-14040		BOLT	ﾎﾞﾙﾄ	1	
49	02011-00014		WASHER	ﾜｯｼｬ	1	
50	23917-42191		SHIM,T-1.0	ｼﾑ	5	
51	22679-43831		SHIM,T-0.2	ｼﾑ	5	

FIG.166 MAST PIPING [VFM2N9]

(M7020560) マストパイピング

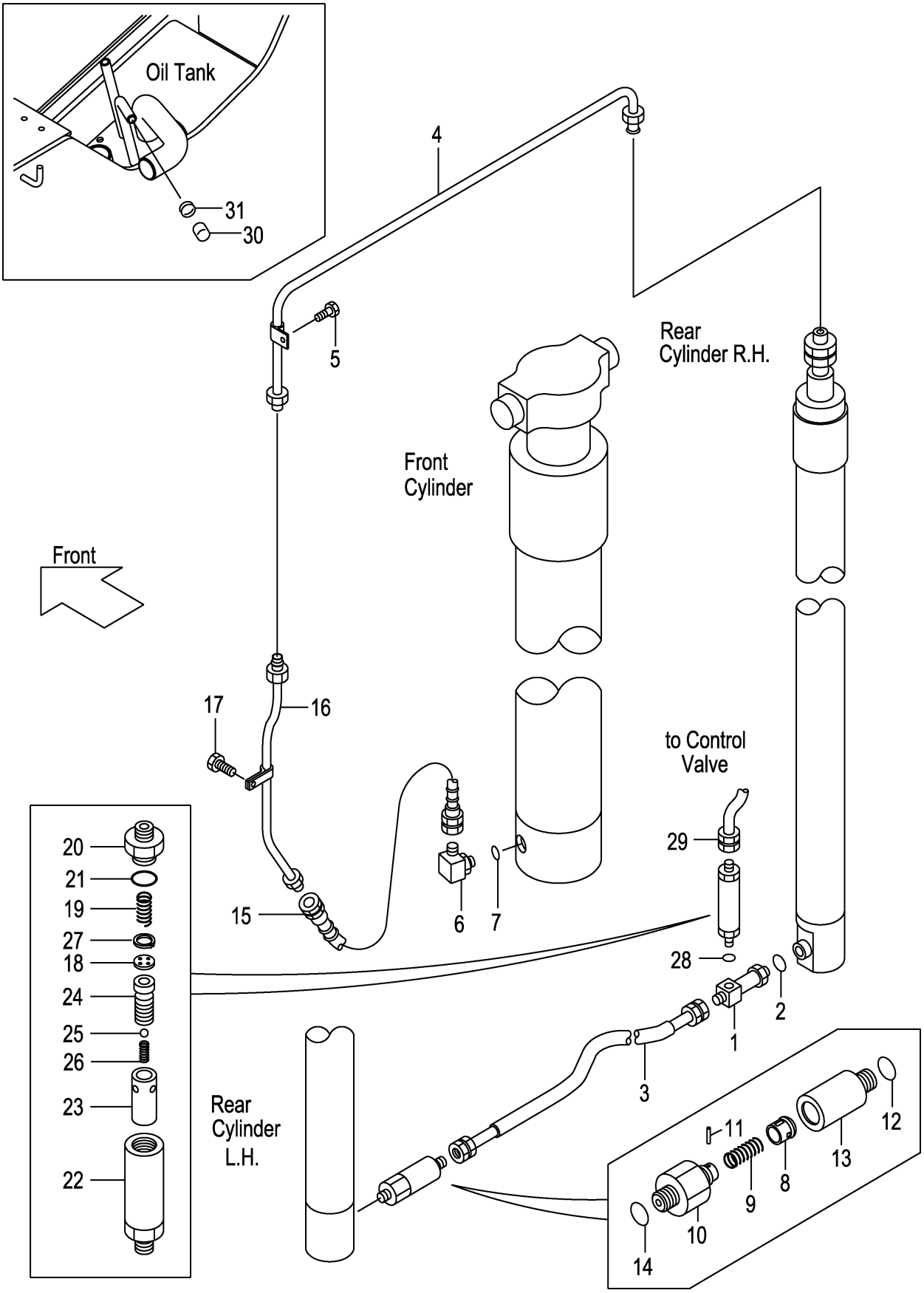

A:VFM2N9(3T)

Item No	Part No.	Mark	Description		Req'd	Remarks : Serial No.
A1	234A8-41101		THREE-WAY-ASSY	ｽﾘｰｳｪｲｱｯｾﾝ	1	INC.1,2
1	NO PART NO.	#	THREE-WAY	ｽﾘｰｳｪｲ	1	
2	03320-00140		O-RING	Oﾘﾝｸﾞ	1	
3	277T0-62071		HOSE	ﾎｰｽ	1	
4	277T0-62051		PIPE	ﾊﾟｲﾌﾟ	1	
5	01183-06016		BOLT	ﾎﾞﾙﾄ	1	
A2	04150-20404		ELBOW-ASSY	ｴﾙﾎﾞｱｯｾﾝ	1	INC.6,7
6	NO PART NO.	#	ELBOW	ｴﾙﾎﾞ	1	
7	03320-00180		O-RING	Oﾘﾝｸﾞ	1	
A3	234A0-62051		VALVE-ASSY,CUT	ｶｯﾄﾊﾞﾙﾌﾞｱｯｾﾝ	1	INC.8-14
A4	234A8-40701		VALVE-SUB-ASSY,CUT	ｶｯﾄﾊﾞﾙﾌﾞｻﾌﾞｱｯｾﾝ	1	INC.8-12
8	234A8-42602		PISTON	ﾋﾟｽﾄﾝ	1	
9	234A8-42611		SPRING	ｽﾌﾟﾘﾝｸﾞ	1	
10	234A8-42622		NIPPLE	ﾆｯﾌﾟﾙ	1	
11	02270-01014		PIN	ﾋﾟﾝ	1	
12	03320-00140		O-RING	Oﾘﾝｸﾞ	1	
13	234A0-62111		ADAPTER	ｱﾀﾞﾌﾟﾀ	1	
14	03320-00140		O-RING	Oﾘﾝｸﾞ	1	
15	214A0-62151		HOSE	ﾎｰｽ	1	
16	277T0-60311		PIPE VFM200	ﾊﾟｲﾌﾟ	1	
-	277T0-60321		PIPE VFM225	ﾊﾟｲﾌﾟ	1	
-	277T0-60331		PIPE VFM250	ﾊﾟｲﾌﾟ	1	
-	277T0-60341		PIPE VFM270	ﾊﾟｲﾌﾟ	1	
-	277T0-60351		PIPE VFM275	ﾊﾟｲﾌﾟ	1	
-	277T0-60301		PIPE VFM300	ﾊﾟｲﾌﾟ	1	
-	277T0-60361		PIPE VFM325	ﾊﾟｲﾌﾟ	1	
-	277T0-60371		PIPE VFM330	ﾊﾟｲﾌﾟ	1	
-	277T0-60381		PIPE VFM350	ﾊﾟｲﾌﾟ	1	
-	277T0-60391		PIPE VFM366	ﾊﾟｲﾌﾟ	1	
-	277T0-60401		PIPE VFM370	ﾊﾟｲﾌﾟ	1	
-	277T0-60411		PIPE VFM375	ﾊﾟｲﾌﾟ	1	
-	277T0-60421		PIPE VFM400	ﾊﾟｲﾌﾟ	1	
-	277T0-60431		PIPE VFM425	ﾊﾟｲﾌﾟ	1	
-	277T0-60441		PIPE VFM450	ﾊﾟｲﾌﾟ	1	
-	277T0-60451		PIPE VFM475	ﾊﾟｲﾌﾟ	1	
-	277T0-60461		PIPE VFM500	ﾊﾟｲﾌﾟ	1	
-	277T0-60471		PIPE VFM550	ﾊﾟｲﾌﾟ	1	
-	277T0-60481		PIPE VFM600	ﾊﾟｲﾌﾟ	1	
17	01183-06016		BOLT	ﾎﾞﾙﾄ	1	
A5	234F8-41001		REGULATOR-ASSY,FLOW	ﾌﾛｰﾚｷﾞｭﾚｰﾀｱｯｾﾝ	1	INC.18-27
18	NO PART NO.	#	PLATE	ﾌﾟﾚｰﾄ	1	
19	27979-43101		SPRING	ｽﾌﾟﾘﾝｸﾞ	1	
20	NO PART NO.	#	NIPPLE	ﾆｯﾌﾟﾙ	1	
21	03320-00280		O-RING	Oﾘﾝｸﾞ	1	
22	NO PART NO.	#	CASE	ｹｰｽ	1	
23	NO PART NO.	#	SLEEVE	ｽﾘｰﾌﾞ	1	
24	NO PART NO.	#	PISTON	ﾋﾟｽﾄﾝ	1	
25	24459-42951		BALL	ﾎﾞｰﾙ	1	
26	214A8-44151		SPRING	ｽﾌﾟﾘﾝｸﾞ	1	
27	02110-00018		RING,SNAP	ｽﾅｯﾌﾟﾘﾝｸﾞ	1	

FIG.166 MAST PIPING [VFM2N9]

(M7020560) マストパイピング

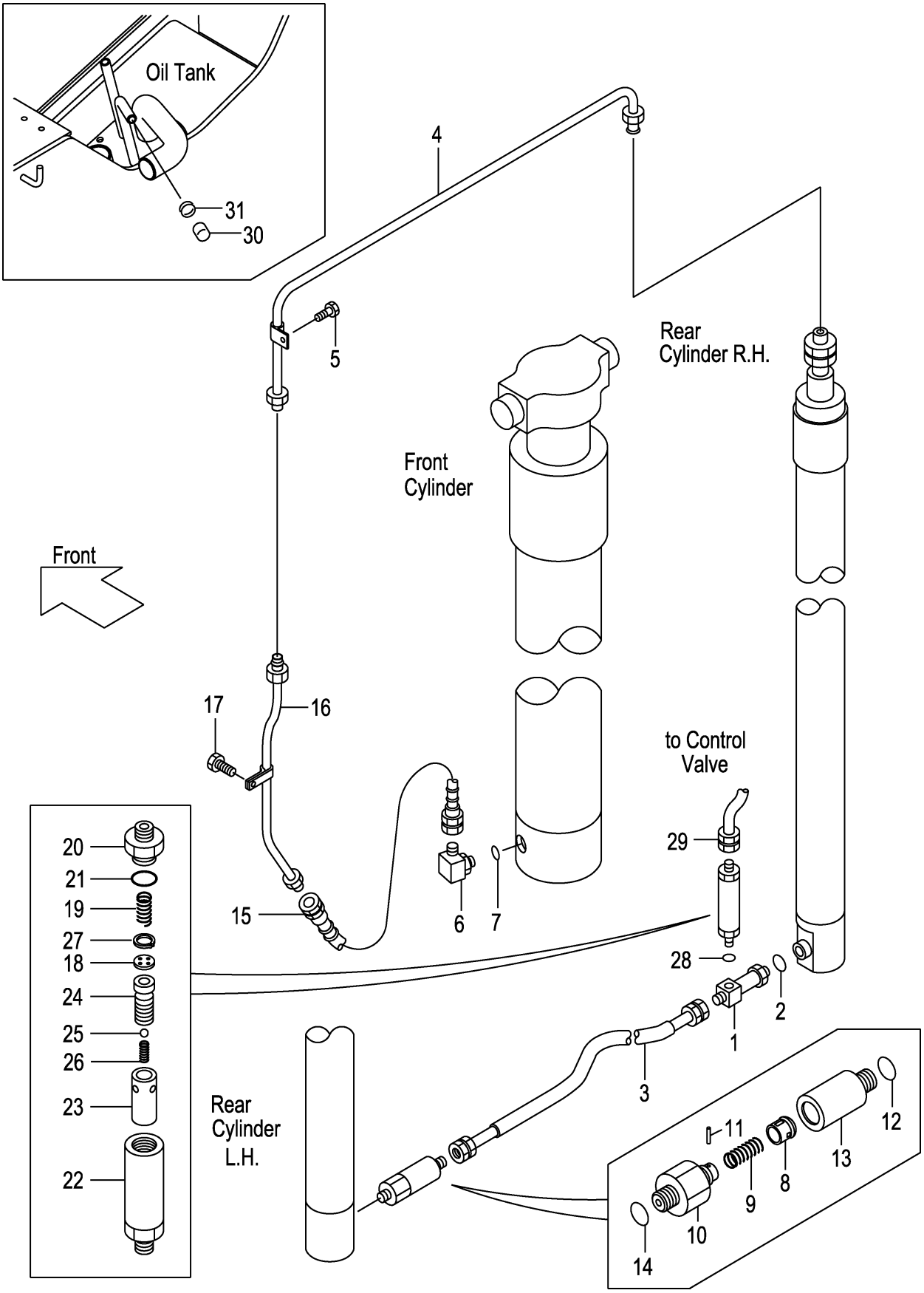

A:VFM2N9(3T)

Item No	Part No.	Mark	Description		Req'd	Remarks : Serial No.
28	03320-00180		O-RING	Oﾘﾝｸﾞ	1	
29	277N0-82021		HOSE	ﾎｰｽ	1	
30	55593-62551		CAP	ｷｬｯﾌﾟ	1	
31	04914-00019		CLIP	ｸﾘｯﾌﾟ	1	

M E M O

M E M O

FIG.167 FORK [VFHM2N9]

(M7028180) フォーク

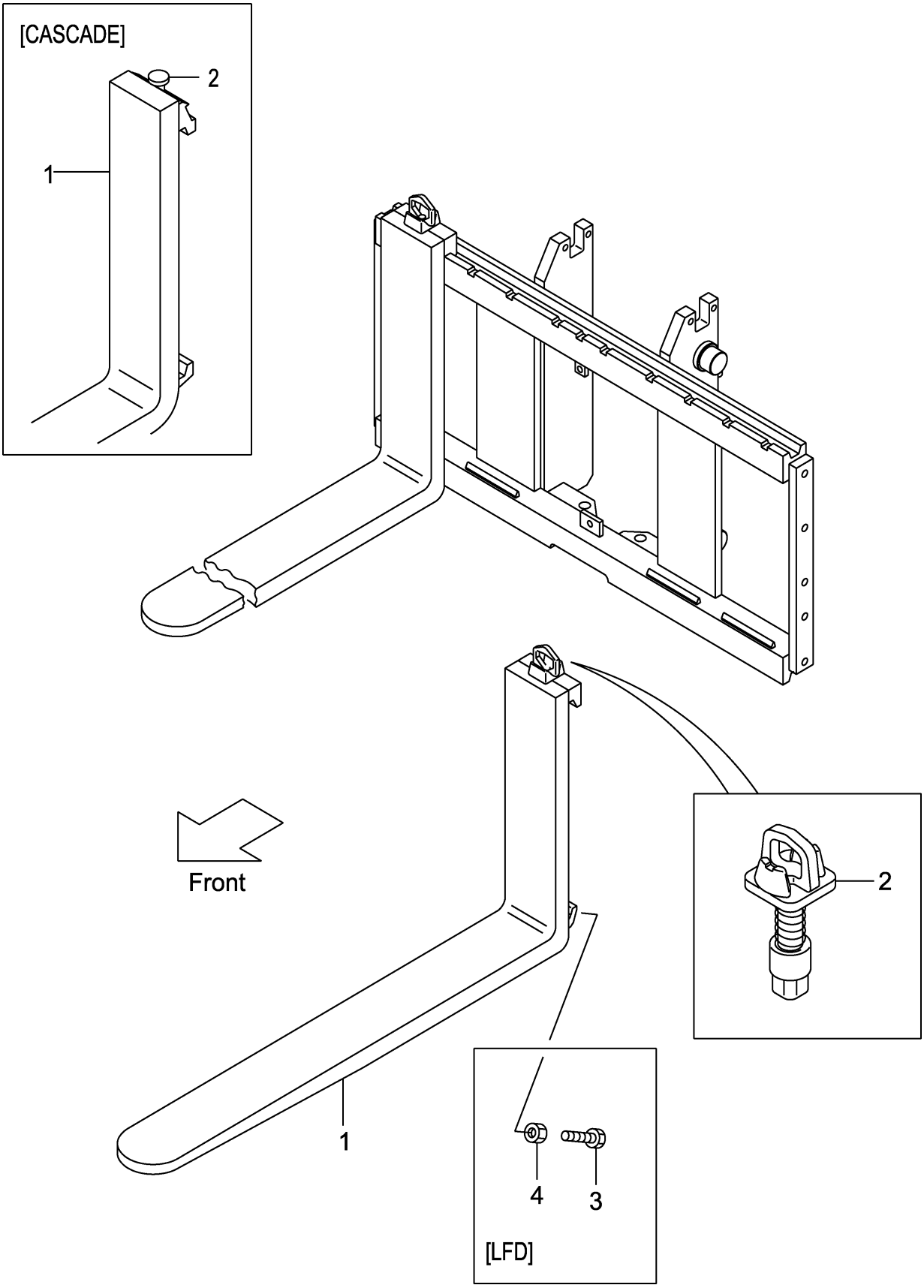

A:VFHM2N9(3T)

Item No	Part No.	Mark	Description		Req'd	Remarks : Serial No.
1	214J8-10501		FORK	ﾌｫｰｸ	2	(L=1070)
-	214J8-10581		FORK	ﾌｫｰｸ	2	[LF100]
-	214J8-10501		FORK	ﾌｫｰｸ	2	[LF107]
-	214J8-10591		FORK	ﾌｫｰｸ	2	[LF110]
-	214J8-10601		FORK	ﾌｫｰｸ	2	[LF120]
-	214J8-10511		FORK	ﾌｫｰｸ	2	[LF122]
-	214J8-10611		FORK	ﾌｫｰｸ	2	[LF130]
-	214J8-10521		FORK	ﾌｫｰｸ	2	[LF137]
-	214J8-10621		FORK	ﾌｫｰｸ	2	[LF140]
-	214J8-10631		FORK	ﾌｫｰｸ	2	[LF150]
-	214J8-10531		FORK	ﾌｫｰｸ	2	[LF152]
-	214J8-10641		FORK	ﾌｫｰｸ	2	[LF160]
-	214J8-10541		FORK	ﾌｫｰｸ	2	[LF167]
-	214J8-10651		FORK	ﾌｫｰｸ	2	[LF170]
-	214J8-10661		FORK	ﾌｫｰｸ	2	[LF180]
-	214J8-10551		FORK	ﾌｫｰｸ	2	[LF182]
-	214J8-10671		FORK	ﾌｫｰｸ	2	[LF190]
-	214J8-10561		FORK	ﾌｫｰｸ	2	[LF197]
-	214J8-10681		FORK	ﾌｫｰｸ	2	[LF200]
-	214J8-10571		FORK	ﾌｫｰｸ	2	[LF212]
-	234F8-10581		FORK	ﾌｫｰｸ	2	[LFD100]
-	234F8-10501		FORK	ﾌｫｰｸ	2	[LFD107]
-	234F8-10591		FORK	ﾌｫｰｸ	2	[LFD110]
-	234F8-10601		FORK	ﾌｫｰｸ	2	[LFD120]
-	234F8-10511		FORK	ﾌｫｰｸ	2	[LFD122]
-	234F8-10611		FORK	ﾌｫｰｸ	2	[LFD130]
-	234F8-10521		FORK	ﾌｫｰｸ	2	[LFD137]
-	234F8-10621		FORK	ﾌｫｰｸ	2	[LFD140]
-	234F8-10631		FORK	ﾌｫｰｸ	2	[LFD150]
-	234F8-10531		FORK	ﾌｫｰｸ	2	[LFD152]
-	234F8-10641		FORK	ﾌｫｰｸ	2	[LFD160]
-	234F8-10541		FORK	ﾌｫｰｸ	2	[LFD167]
-	234F8-10651		FORK	ﾌｫｰｸ	2	[LFD170]
-	234F8-10661		FORK	ﾌｫｰｸ	2	[LFD180]
-	234F8-10551		FORK	ﾌｫｰｸ	2	[LFD182]
-	234F8-10671		FORK	ﾌｫｰｸ	2	[LFD190]
-	234F8-10561		FORK	ﾌｫｰｸ	2	[LFD197]
-	234F8-10681		FORK	ﾌｫｰｸ	2	[LFD200]
-	234F8-10571		FORK	ﾌｫｰｸ	2	[LFD212]
-	22N98-10501		FORK	ﾌｫｰｸ	2	[LF107/CASCADE] INC.2
-	22N98-10511		FORK	ﾌｫｰｸ	2	[LF122/CASCADE] INC.2
2	214J8-11002		STOPPER,FORK	ｽﾄｯﾊﾟ	2	
-	W-K3PK-M		KIT,PIN,STOPPER	ｽﾄｯﾊﾟｷｯﾄ	2	[CASCADE]
3	234F8-12101		BOLT	ﾎﾞﾙﾄ	4	[LFD]
4	01402-00010		NUT	ﾅｯﾄ	4	[LFD]

FIG.168 LIFT BRACKET [VFHM2N9]

(M7020930) ﾘﾌﾄﾌﾞﾗｹｯﾄ

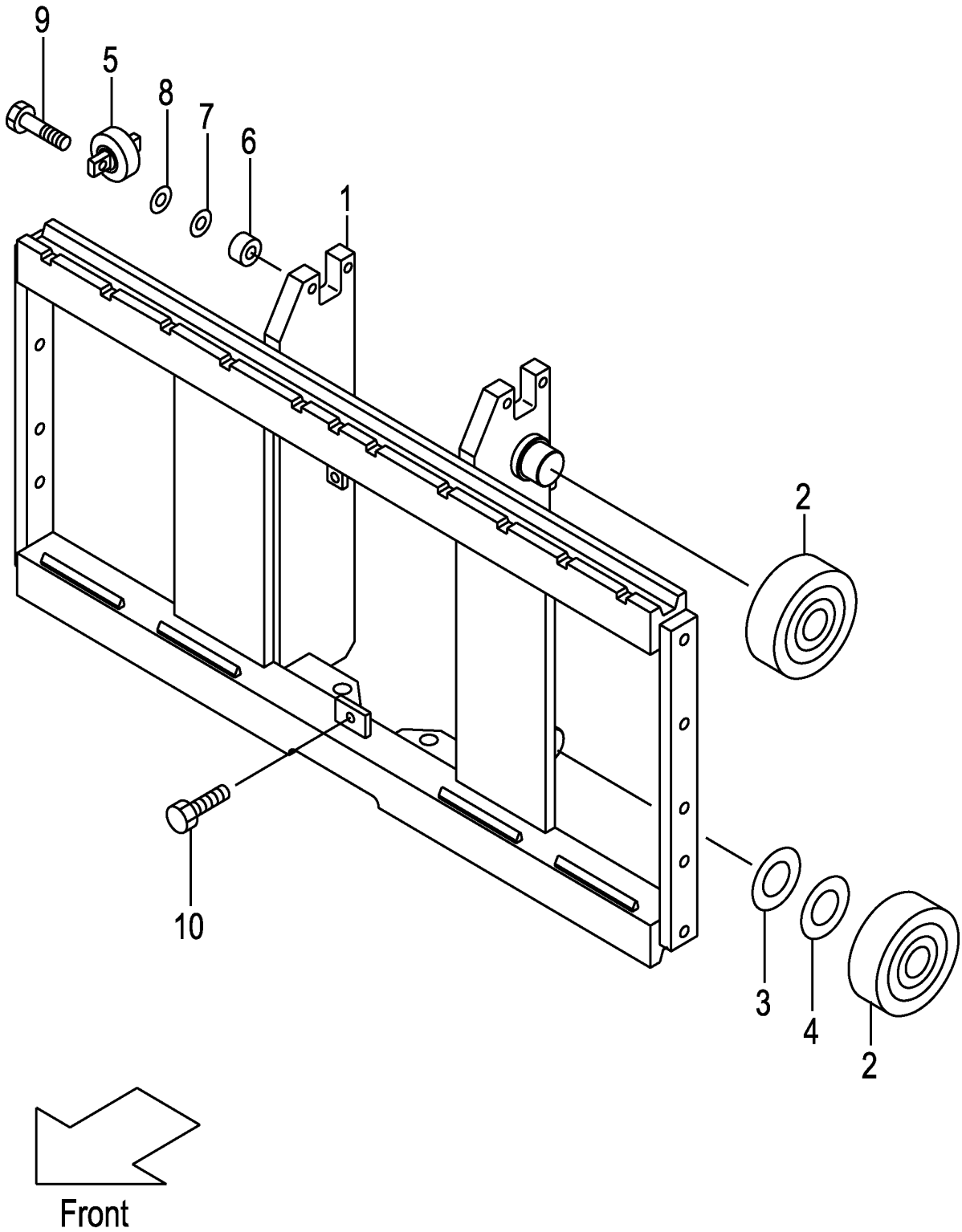

A:VFHM2N9(3T)

Item No	Part No.	Mark	Description		Req'd	Remarks : Serial No.
1	22N90-90101		BRACKET,LIFT	ﾌﾞﾗｹｯﾄ	1	
-	52N91-61301		BRACKET,LIFT	ﾌﾞﾗｹｯﾄ	1	[WFY110][WFY114][WFY127] [WFY135][WFY138]
-	52N91-61311		BRACKET,LIFT (L)	ﾌﾞﾗｹｯﾄ	1	[WFY135][WFY138][WFY145] [WFY146][WFY154][WFY180]
2	277P8-22051		ROLLER,END,119.0	ﾛｰﾗ	4	
-	577P3-74001		ROLLER,END,119.0	ﾛｰﾗ	4	[FC][CS35][FCS35][FCS45] [FCS55]
-	277P8-22061		ROLLER,END,119.5	ﾛｰﾗ	(4)	
-	577P3-74011		ROLLER,END,119.5	ﾛｰﾗ	(4)	[FC][CS35][FCS35][FCS45] [FCS55]
3	277P8-22071		SHIM,T-0.5	ｼﾑ	5	
4	277P8-22081		SHIM,T-1.0	ｼﾑ	5	
5	22N58-32701		ROLLER,SIDE	ﾛｰﾗ	2	
-	52N53-74001		ROLLER,SIDE	ﾛｰﾗ	2	[FC][CS35][FCS35][FCS45] [FCS55]
6	22N58-32711		SPACER	ｽﾍﾟｰｻ	4	
7	22018-30261		SHIM,T-0.5	ｼﾑ	4	
8	22018-30121		SHIM,T-1.0	ｼﾑ	4	
9	01103-10045		BOLT	ﾎﾞﾙﾄ	4	
10	01184-12025		BOLT	ﾎﾞﾙﾄ	1	
11	63110-18901	+	CHART,CAPACITY	ﾁｬｰﾄ	1	
-	63110-18911	+	CHART,CAPACITY	ﾁｬｰﾄ	1	[EXA]
-	524T3-84031	+	CHART,CAPACITY	ﾁｬｰﾄ	1	[EXR]
-	514A3-82301	+	CHART,CAPACITY	ﾁｬｰﾄ	1	[EXB][EXC][EXE][EXN][EXEEC] [EXNEC]
-	529F3-82101	+	CHART,CAPACITY	ﾁｬｰﾄ	1	[EXNEC/FINP]
-	529F3-82111	+	CHART,CAPACITY	ﾁｬｰﾄ	1	[EXNEC/SENP]
-	63110-18921	+	CHART,CAPACITY	ﾁｬｰﾄ	1	[EXB/CNP]
-	514A3-82341	+	CHART,CAPACITY	ﾁｬｰﾄ	1	[EXB/FNP][EXE/FNP][EXEEC/FNP]
-	514A3-82331	+	CHART,CAPACITY	ﾁｬｰﾄ	1	[EXB/SNP][EXE/SNP][EXEEC/SNP]
-	514A3-82361	+	CHART,CAPACITY	ﾁｬｰﾄ	1	[EXEEC/DNP][EXNEC/DNP]
-	514A3-82381	+	CHART,CAPACITY	ﾁｬｰﾄ	1	[EXEEC/GNP]
-	514A3-82371	+	CHART,CAPACITY	ﾁｬｰﾄ	1	[EXEEC/INP]
-	514A3-82351	+	CHART,CAPACITY	ﾁｬｰﾄ	1	[EXEEC/ONP]
-	514A3-82391	+	CHART,CAPACITY	ﾁｬｰﾄ	1	[EXEEC/PNP]
-	514A3-82321	+	CHART,CAPACITY	ﾁｬｰﾄ	1	[EXD][EXDEC]
12	02432-01008	+	RIVET	ﾘﾍﾞｯﾄ	4	

FIG.169 BACKREST [VFHM2N9]

(M7028290) ﾊﾞｯｸﾚｽﾄ

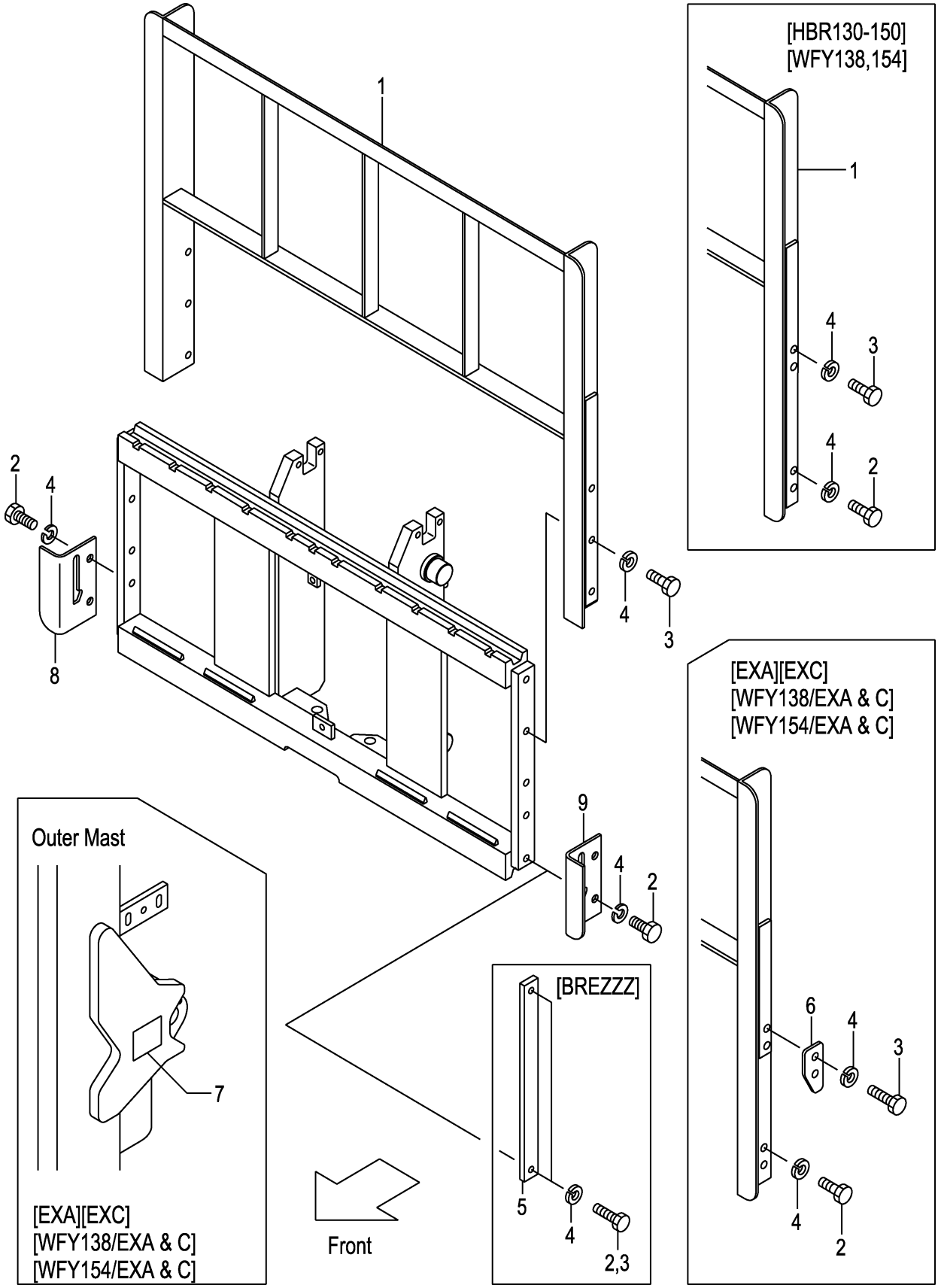

A:VFHM2N9(3T)

Item No	Part No.	Mark	Description		Req'd	Remarks : Serial No.
1	22N98-22001		BACKREST	ﾊﾞｯｸﾚｽﾄ	1	
-	234F8-22101		BACKREST	ﾊﾞｯｸﾚｽﾄ	1	[HBR130]
-	234F8-22111		BACKREST	ﾊﾞｯｸﾚｽﾄ	1	[HBR140]
-	234F8-22121		BACKREST	ﾊﾞｯｸﾚｽﾄ	1	[HBR150]
-	534F1-64401		BACKREST	ﾊﾞｯｸﾚｽﾄ	1	[WFY138]
-	534F1-64411		BACKREST	ﾊﾞｯｸﾚｽﾄ	1	[WFY154]
-	534F2-74001		BACKREST	ﾊﾞｯｸﾚｽﾄ	1	[EXA][EXC]
2	01100-14025		BOLT	ﾎﾞﾙﾄ	4	
-	01100-14030		BOLT	ﾎﾞﾙﾄ	4	[HBR130][HBR140][HBR150]
-	01100-14025		BOLT	ﾎﾞﾙﾄ	4	[WFY138][WFY154]
-	01100-14025		BOLT	ﾎﾞﾙﾄ	4	[EXA][EXC]
-	01100-14025		BOLT	ﾎﾞﾙﾄ	2	[BREZZZ]
3	01100-14030		BOLT	ﾎﾞﾙﾄ	6	
-	01100-14030		BOLT	ﾎﾞﾙﾄ	4	[HBR130][HBR140][HBR150]
-	01100-14030		BOLT	ﾎﾞﾙﾄ	4	[WFY138][WFY154]
-	01100-14035		BOLT	ﾎﾞﾙﾄ	4	[EXA][EXC](WFY138,WFY154)
						(EXA,EXC)
-	01100-14025		BOLT	ﾎﾞﾙﾄ	2	[BREZZZ]
4	02010-00014		WASHER	ﾜｯｼｬ	10	
-	02010-00014		WASHER	ﾜｯｼｬ	8	[EXA][EXC][HBR130-150]
						[WFY138][WFY154]
-	02010-00014		WASHER	ﾜｯｼｬ	8	(WFY138,WFY154)/(EXA,EXC)
-	02010-00014		WASHER	ﾜｯｼｬ	4	[BREZZZ]
5	24450-92021		PLATE	ﾌﾟﾚｰﾄ	2	[BREZZZ]
6	534A2-74051		PLATE,STOPPER	ﾌﾟﾚｰﾄ	2	[EXA][EXC](WFY138,WFY154)
						(EXA,EXC)
7	534A2-74301		DECAL,CAUTION	ﾃﾞｶﾙ	1	[EXA][EXC](WFY138,WFY154)
						(EXA,EXC)
8	22N98-22111		PLATE,UNDER,RH	ﾌﾟﾚｰﾄ	1	
9	22N98-22121		PLATE,UNDER,LH	ﾌﾟﾚｰﾄ	1	

FIG.170 MAST [VFHM2N9]

(M7020740) マスト

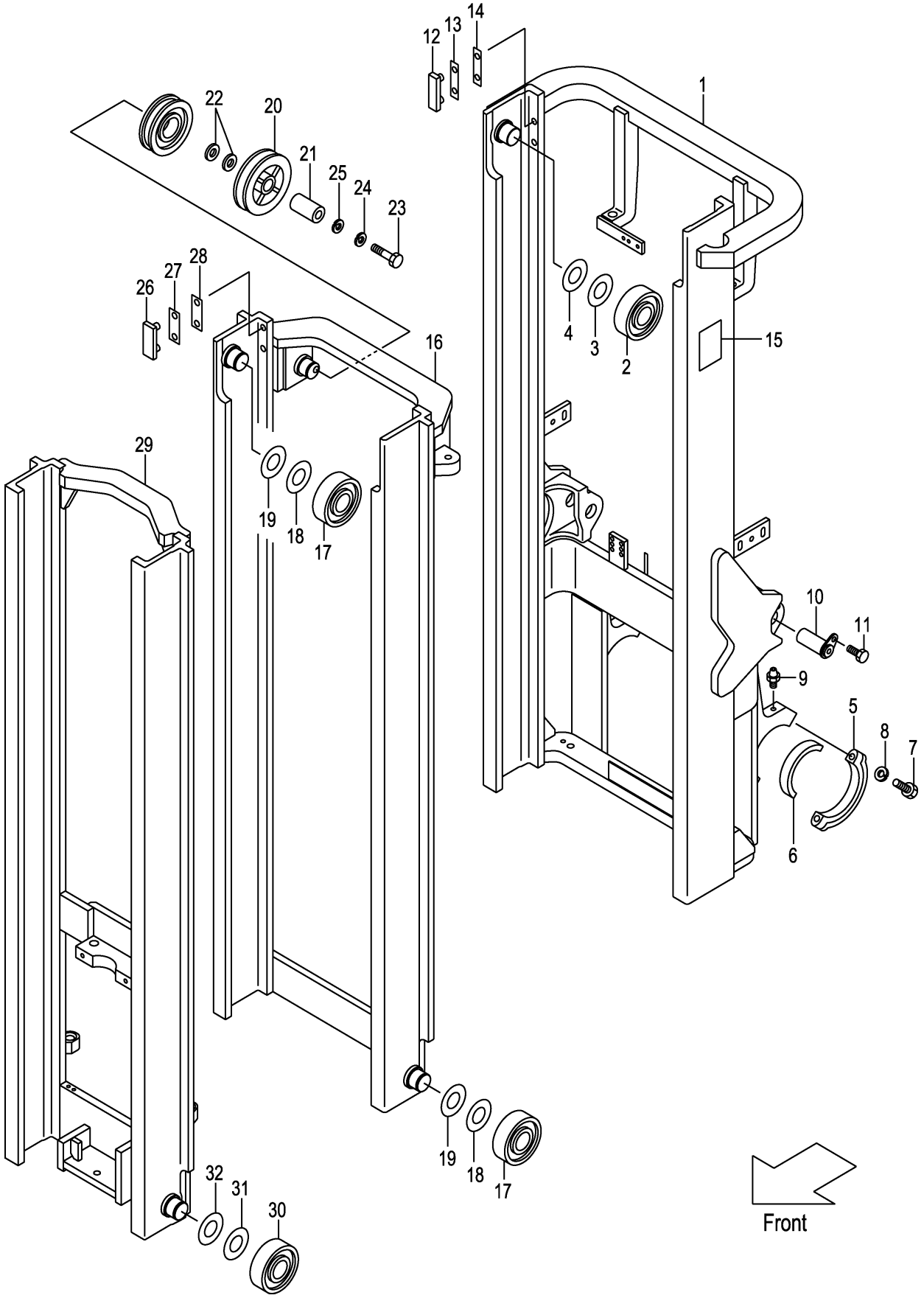

A:VFHM2N9(3T)

Item No	Part No.	Mark	Description		Req'd	Remarks : Serial No.
1	22N90-70211		MAST,OUTER VFHM360	ｱｳﾀﾏｽﾄ	1	
-	22N90-70221		MAST,OUTER VFHM400	ｱｳﾀﾏｽﾄ	1	
-	22N90-70201		MAST,OUTER VFHM435	ｱｳﾀﾏｽﾄ	1	
-	22N90-70231		MAST,OUTER VFHM480	ｱｳﾀﾏｽﾄ	1	
-	22N90-70241		MAST,OUTER VFHM500	ｱｳﾀﾏｽﾄ	1	
-	22N90-70251		MAST,OUTER VFHM540	ｱｳﾀﾏｽﾄ	1	
-	22N90-70261		MAST,OUTER VFHM550	ｱｳﾀﾏｽﾄ	1	
-	22N90-70271		MAST,OUTER VFHM600	ｱｳﾀﾏｽﾄ	1	
-	22N90-70281		MAST,OUTER VFHM650	ｱｳﾀﾏｽﾄ	1	
-	22N90-70291		MAST,OUTER VFHM700	ｱｳﾀﾏｽﾄ	1	
-	22N90-70301		MAST,OUTER VFHM750	ｱｳﾀﾏｽﾄ	1	
2	277P8-22051		ROLLER,END,119.0	ﾛｰﾗ	2	
-	577P3-74001		ROLLER,END,119.0	ﾛｰﾗ	2	[FC][CS35][FCS35][FCS45] [FCS55]
3	277P8-22071		SHIM,T-0.5	ｼﾑ	12	
4	277P8-22081		SHIM,T-1.0	ｼﾑ	12	
5	277P8-32701		CAP	ｷｬｯﾌﾟ	2	
6	214A8-02201		BUSHING	ﾌﾞｯｼﾝｸﾞ	2	
7	01103-16065		BOLT	ﾎﾞﾙﾄ	4	
8	02011-00016		WASHER	ﾜｯｼｬ	4	
9	04901-00100		FITTING	ﾌｨｯﾃｨﾝｸﾞ	2	
10	272K8-52201		PIN	ﾋﾟﾝ	2	
11	216G8-52301		BOLT	ﾎﾞﾙﾄ	2	
12	216G8-33401		SLIPPER	ｽﾘｯﾊﾟ	2	
13	216G8-33361		SHIM,T-0.5	ｼﾑ	8	
14	216G8-33371		SHIM,T-1.0	ｼﾑ	4	
15	23678-06002		PLATE,NAME	ﾌﾟﾚｰﾄ	1	
16	22N90-70411		MAST,MIDDLE VFHM360	ﾐﾄﾞﾙﾏｽﾄ	1	
-	22N90-70421		MAST,MIDDLE VFHM400	ﾐﾄﾞﾙﾏｽﾄ	1	
-	22N90-70401		MAST,MIDDLE VFHM435	ﾐﾄﾞﾙﾏｽﾄ	1	
-	22N90-70431		MAST,MIDDLE VFHM480	ﾐﾄﾞﾙﾏｽﾄ	1	
-	22N90-70441		MAST,MIDDLE VFHM500	ﾐﾄﾞﾙﾏｽﾄ	1	
-	22N90-70451		MAST,MIDDLE VFHM540	ﾐﾄﾞﾙﾏｽﾄ	1	
-	22N90-70461		MAST,MIDDLE VFHM550	ﾐﾄﾞﾙﾏｽﾄ	1	
-	22N90-70471		MAST,MIDDLE VFHM600	ﾐﾄﾞﾙﾏｽﾄ	1	
-	22N90-70481		MAST,MIDDLE VFHM650	ﾐﾄﾞﾙﾏｽﾄ	1	
-	22N90-70491		MAST,MIDDLE VFHM700	ﾐﾄﾞﾙﾏｽﾄ	1	
-	22N90-70501		MAST,MIDDLE VFHM750	ﾐﾄﾞﾙﾏｽﾄ	1	
17	277P8-22051		ROLLER,END,119.0	ﾛｰﾗ	4	
-	577P3-74001		ROLLER,END,119.0	ﾛｰﾗ	4	[FC][CS35][FCS35][FCS45] [FCS55]
-	277P8-22061		ROLLER,END,119.5	ﾛｰﾗ	(2)	
-	577P3-74011		ROLLER,END,119.5	ﾛｰﾗ	(2)	[FC][CS35][FCS35][FCS45] [FCS55]
18	277P8-22071		SHIM,T-0.5	ｼﾑ	15	
19	277P8-22081		SHIM,T-1.0	ｼﾑ	15	
20	63130-15301		PULLEY	ﾌﾟｰﾘ	1	
21	214A0-72701		COLLAR	ｶﾗｰ	1	
22	62050-12331		SPACER	ｽﾍﾟｰｻ	2	
23	01100-16060		BOLT	ﾎﾞﾙﾄ	1	

FIG.170 MAST [VFHM2N9]

(M7020740) マスト

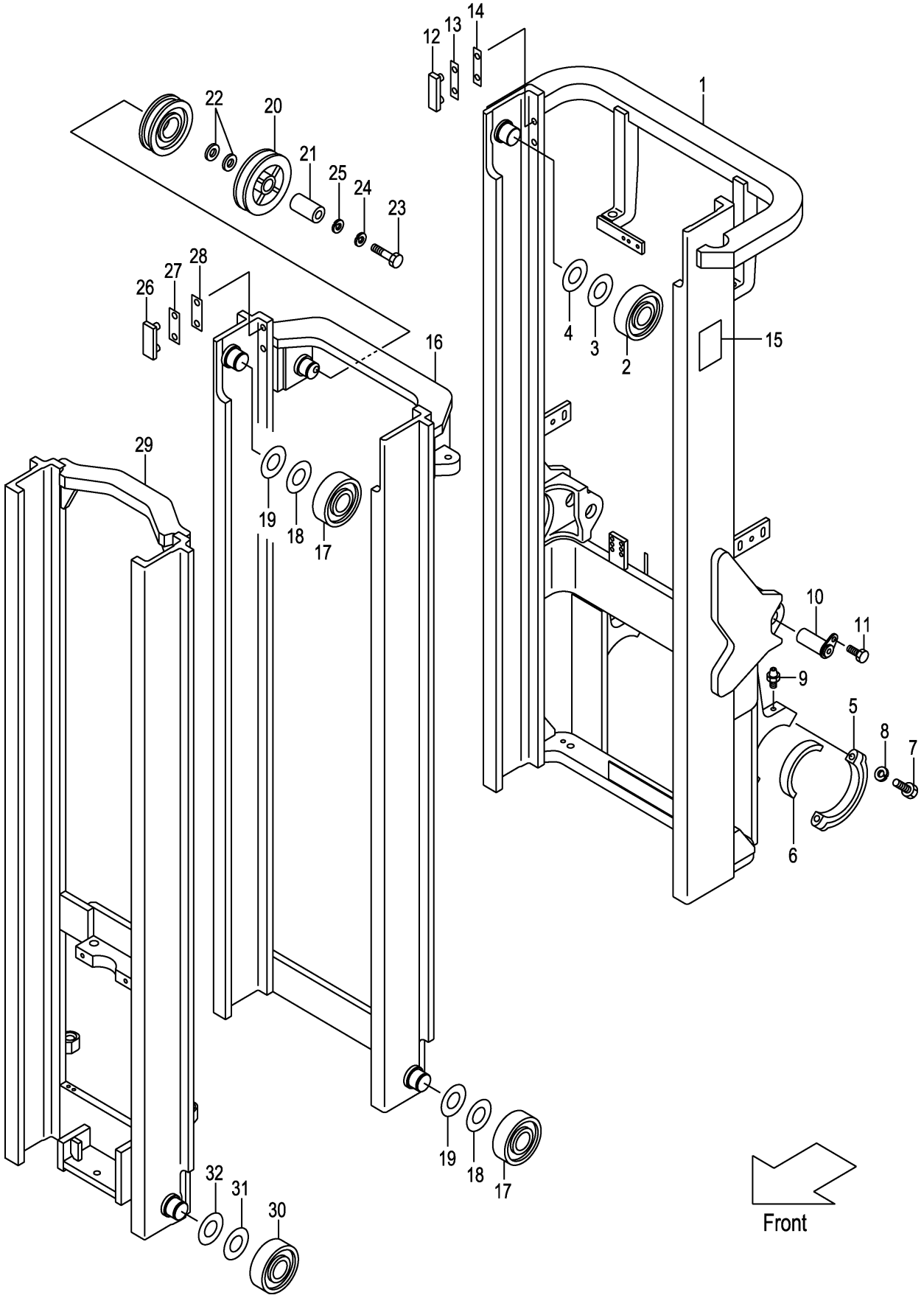

A:VFHM2N9(3T)

Item No	Part No.	Mark	Description		Req'd	Remarks : Serial No.
24	02010-00016		WASHER	ﾜｯｼｬ	1	
25	02000-00016		WASHER	ﾜｯｼｬ	1	
26	216G8-33351		SLIPPER	ｽﾘｯﾊﾟ	2	
27	216G8-33361		SHIM,T-0.5	ｼﾑ	4	
28	216G8-33371		SHIM,T-1.0	ｼﾑ	8	
29	22N90-70611		MAST,INNER VFHM360	ｲﾝﾅﾏｽﾄ	1	
-	22N90-70621		MAST,INNER VFHM400	ｲﾝﾅﾏｽﾄ	1	
-	22N90-70601		MAST,INNER VFHM435	ｲﾝﾅﾏｽﾄ	1	
-	22N90-70631		MAST,INNER VFHM480	ｲﾝﾅﾏｽﾄ	1	
-	22N90-70641		MAST,INNER VFHM500	ｲﾝﾅﾏｽﾄ	1	
-	22N90-70651		MAST,INNER VFHM540	ｲﾝﾅﾏｽﾄ	1	
-	22N90-70661		MAST,INNER VFHM550	ｲﾝﾅﾏｽﾄ	1	
-	22N90-70671		MAST,INNER VFHM600	ｲﾝﾅﾏｽﾄ	1	
-	22N90-70681		MAST,INNER VFHM650	ｲﾝﾅﾏｽﾄ	1	
-	22N90-70691		MAST,INNER VFHM700	ｲﾝﾅﾏｽﾄ	1	
-	22N90-70701		MAST,INNER VFHM750	ｲﾝﾅﾏｽﾄ	1	
30	277P8-22051		ROLLER,END,119.0	ﾛｰﾗ	2	
-	577P3-74001		ROLLER,END,119.0	ﾛｰﾗ	2	[FC][CS35][FCS35][FCS45] [FCS55]
-	277P8-22061		ROLLER,END,119.5	ﾛｰﾗ	(2)	
-	577P3-74011		ROLLER,END,119.5	ﾛｰﾗ	(2)	[FC][CS35][FCS35][FCS45] [FCS55]
31	277P8-22071		SHIM,T-0.5	ｼﾑ	12	
32	277P8-22081		SHIM,T-1.0	ｼﾑ	12	

M E M O

M E M O

FIG.171 TILT GAUGE [VFHM2N9/(TG,PPC,PR,PRC,MPC)]

(M7020750) ﾃｨﾙﾄｹﾞｰｼﾞ

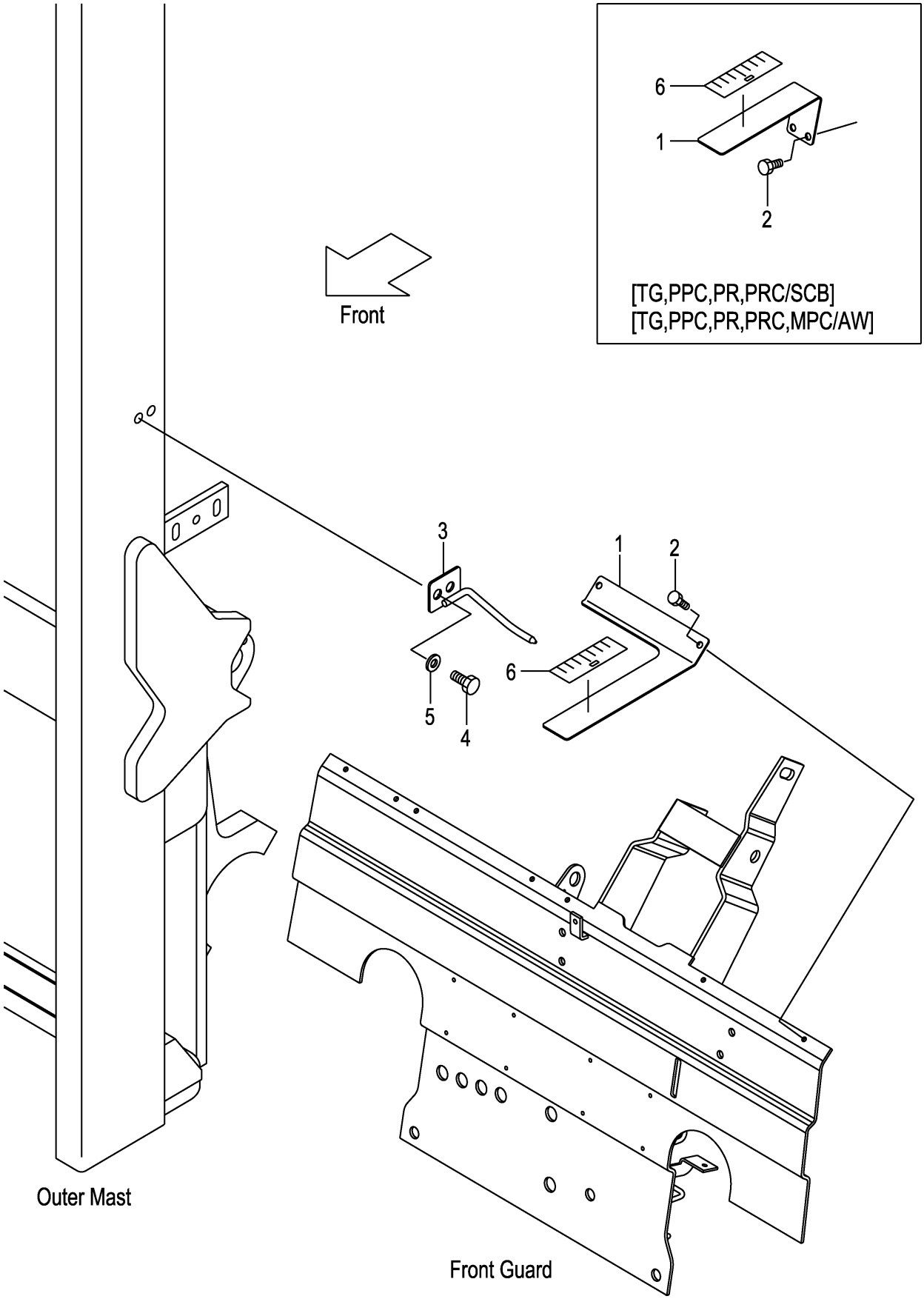

A:VFHM2N9(3T)

Item No	Part No.	Mark	Description		Req'd	Remarks : Serial No.
1	62A89-21811		GAUGE,TILT	ｹﾞｰｼﾞ	1	[TG][PPC][PR][PRC][MPC]
-	62A89-21831		GAUGE,TILT	ｹﾞｰｼﾞ	1	[TG/SCB][PPC/SCB][PR/SCB] [PRC/SCB][MPC/SCB]
-	62A89-21831		GAUGE,TILT	ｹﾞｰｼﾞ	1	[TG/AW][PPC/AW][PR/AW] [PRC/AW][MPC/AW]
2	01183-06020		BOLT	ﾎﾞﾙﾄ	2	
3	62A89-21851		INDICATOR	ｲﾝｼﾞｹｰﾀ	1	
4	01184-12025		BOLT	ﾎﾞﾙﾄ	2	
5	02000-00012		WASHER	ﾜｯｼｬ	2	
6	62459-23371		SEAL,GAUGE	ｼｰﾙ	1	

FIG.172 LIFT CYLINDER (FRONT) [VFHM2N9]

(M7020870) リフトシリンダ(フロント)

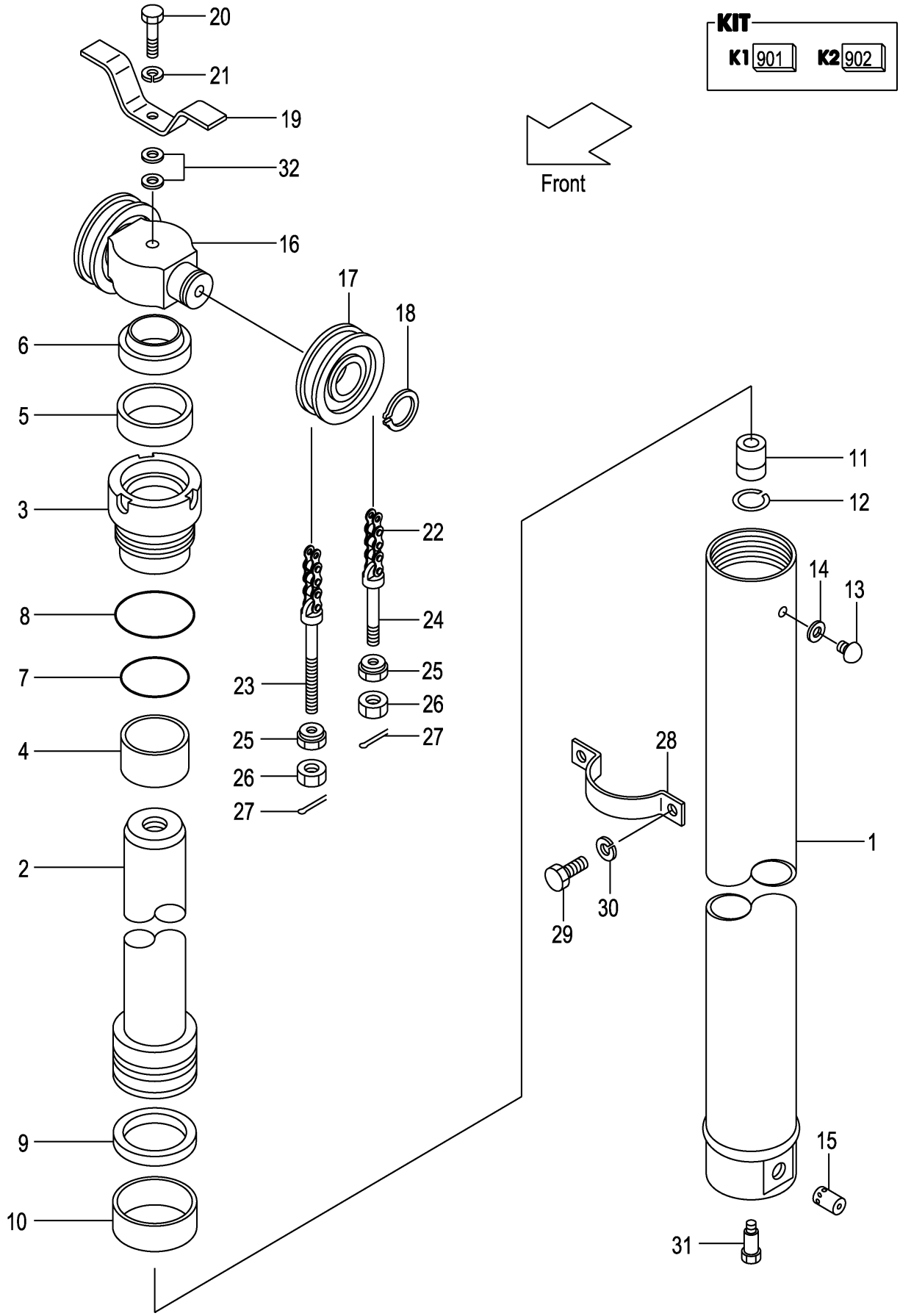

A:VFHM2N9(3T)

Item No	Part No.	Mark	Description		Req'd	Remarks : Serial No.
A1	212Y0-80511		CYL-ASSY,LIFT VFHM360	ﾘﾌﾄｼﾘﾝﾀﾞｱｯｾﾝ	1	INC.1-15
-	212Y0-80521		CYL-ASSY,LIFT VFHM400	ﾘﾌﾄｼﾘﾝﾀﾞｱｯｾﾝ	1	INC.1-15
-	212Y0-80531		CYL-ASSY,LIFT VFHM435	ﾘﾌﾄｼﾘﾝﾀﾞｱｯｾﾝ	1	INC.1-15
-	212Y0-80501		CYL-ASSY,LIFT VFHM480	ﾘﾌﾄｼﾘﾝﾀﾞｱｯｾﾝ	1	INC.1-15
-	212Y0-80541		CYL-ASSY,LIFT VFHM500	ﾘﾌﾄｼﾘﾝﾀﾞｱｯｾﾝ	1	INC.1-15
-	212Y0-80551		CYL-ASSY,LIFT VFHM540	ﾘﾌﾄｼﾘﾝﾀﾞｱｯｾﾝ	1	INC.1-15
-	212Y0-80561		CYL-ASSY,LIFT VFHM550	ﾘﾌﾄｼﾘﾝﾀﾞｱｯｾﾝ	1	INC.1-15
-	212Y0-80571		CYL-ASSY,LIFT VFHM600	ﾘﾌﾄｼﾘﾝﾀﾞｱｯｾﾝ	1	INC.1-15
-	212Y0-80581		CYL-ASSY,LIFT VFHM650	ﾘﾌﾄｼﾘﾝﾀﾞｱｯｾﾝ	1	INC.1-15
-	212Y0-80591		CYL-ASSY,LIFT VFHM700	ﾘﾌﾄｼﾘﾝﾀﾞｱｯｾﾝ	1	INC.1-15
-	212Y0-80601		CYL-ASSY,LIFT VFHM750	ﾘﾌﾄｼﾘﾝﾀﾞｱｯｾﾝ	1	INC.1-15
901	B-B685B-00005	K1	KIT,CYL-HEAD	ﾍｯﾄﾞｷｯﾄ	1	INC.3,4
902	B-B685A-00007	K2	KIT,REPAIR	ﾘﾍﾟｱｷｯﾄ	1	INC.5-10,14
1	B-B6717-89101		BODY,CYL VFHM360	ﾎﾞﾃﾞｨ	1	
-	B-B6717-89201		BODY,CYL VFHM400	ﾎﾞﾃﾞｨ	1	
-	B-B6717-89301		BODY,CYL VFHM435	ﾎﾞﾃﾞｨ	1	
-	B-B6717-89401		BODY,CYL VFHM480	ﾎﾞﾃﾞｨ	1	
-	B-B6717-89501		BODY,CYL VFHM500	ﾎﾞﾃﾞｨ	1	
-	B-B6717-89601		BODY,CYL VFHM540	ﾎﾞﾃﾞｨ	1	
-	B-B6717-89701		BODY,CYL VFHM550	ﾎﾞﾃﾞｨ	1	
-	B-B6717-89801		BODY,CYL VFHM600	ﾎﾞﾃﾞｨ	1	
-	B-B6717-89901		BODY,CYL VFHM650	ﾎﾞﾃﾞｨ	1	
-	B-B6717-90001		BODY,CYL VFHM700	ﾎﾞﾃﾞｨ	1	
-	B-B6717-90101		BODY,CYL VFHM750	ﾎﾞﾃﾞｨ	1	
2	B-B6717-89102		ROD VFHM360	ﾛｯﾄﾞ	1	
-	B-B6717-89202		ROD VFHM400	ﾛｯﾄﾞ	1	
-	B-B6717-89302		ROD VFHM435	ﾛｯﾄﾞ	1	
-	B-B6717-89402		ROD VFHM480	ﾛｯﾄﾞ	1	
-	B-B6717-89502		ROD VFHM500	ﾛｯﾄﾞ	1	
-	B-B6717-89602		ROD VFHM540	ﾛｯﾄﾞ	1	
-	B-B6717-89702		ROD VFHM550	ﾛｯﾄﾞ	1	
-	B-B6717-89802		ROD VFHM600	ﾛｯﾄﾞ	1	
-	B-B6717-89902		ROD VFHM650	ﾛｯﾄﾞ	1	
-	B-B6717-90002		ROD VFHM700	ﾛｯﾄﾞ	1	
-	B-B6717-90102		ROD VFHM750	ﾛｯﾄﾞ	1	
3	B-B6121-85007	*	HEAD	ﾍｯﾄﾞ	1	
4	B-30131-65012	*	BUSHING	ﾌﾞｯｼﾝｸﾞ	1	
5	B-30961-65013	*	U-RING	Uﾘﾝｸﾞ	1	
6	B-30191-65050	*	RING,WIPER	ﾘﾝｸﾞ	1	
7	B-95123-08000	*	O-RING	Oﾘﾝｸﾞ	1	
8	B-95151-08500	*	O-RING	Oﾘﾝｸﾞ	1	
9	B-B6983-85007	*	RING,SEAL	ﾘﾝｸﾞ	1	
10	B-30181-85002	*	RING,SLIDE	ﾘﾝｸﾞ	1	
11	B-C4300-22001		VALVE,CHECK	ﾊﾞﾙﾌﾞ	1	
12	B-94721-22101		RING,SNAP	ｽﾅｯﾌﾟﾘﾝｸﾞ	1	
13	B-B6521-90004		PLUG	ﾌﾟﾗｸﾞ	1	
14	B-B6711-00001	*	GASKET	ｶﾞｽｹｯﾄ	1	
15	B-26570-30125		VALVE	ﾊﾞﾙﾌﾞ	1	
16	212Y0-82001		HEAD,PISTON	ﾍｯﾄﾞ	1	
17	234A8-43501		SHEAVE	ｼｰﾌﾞ	2	

FIG.172 LIFT CYLINDER (FRONT) [VFHM2N9]

(M7020870) リフトシリンダ(フロント)

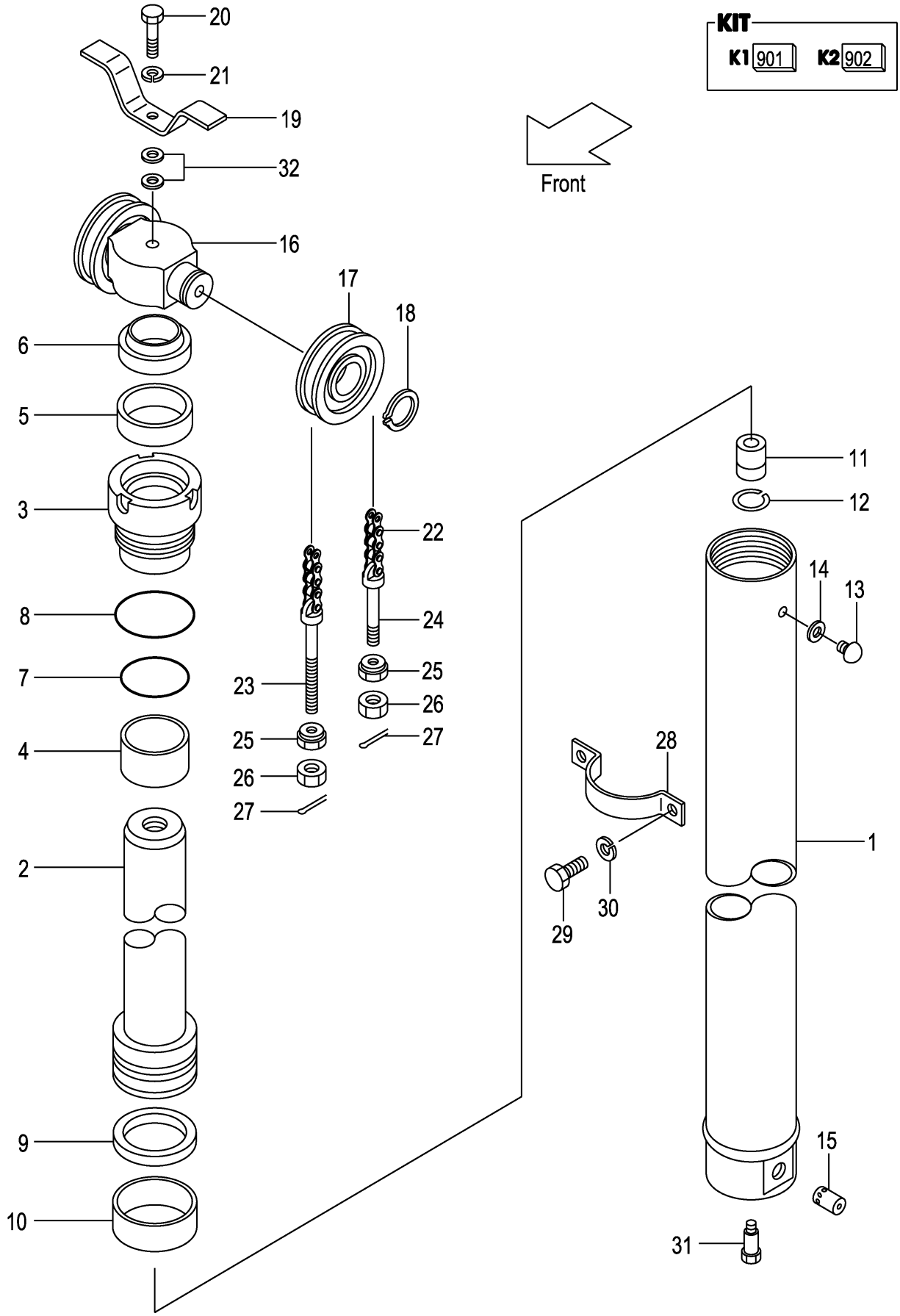

A:VFHM2N9(3T)

Item No	Part No.	Mark	Description		Req'd	Remarks : Serial No.
-	22208-40031		SHEAVE	ｼｰﾌﾞ	2	[FC][FCS35][FCS45][FCS55]
18	02100-00040		RING,SNAP	ｽﾅｯﾌﾟﾘﾝｸﾞ	2	
19	214A0-82681		STOPPER	ｽﾄｯﾊﾟ	1	
20	01100-16075		BOLT	ﾎﾞﾙﾄ	1	
21	02010-00016		WASHER	ﾜｯｼｬ	1	
22	22438-45471		CHAIN,LEAF VFHM360	ﾁｪｰﾝ	2	
-	22438-45531		CHAIN,LEAF VFHM400	ﾁｪｰﾝ	2	
-	22438-45571		CHAIN,LEAF VFHM435	ﾁｪｰﾝ	2	
-	22438-45631		CHAIN,LEAF VFHM480	ﾁｪｰﾝ	2	
-	22438-45671		CHAIN,LEAF VFHM500	ﾁｪｰﾝ	2	
-	22438-45731		CHAIN,LEAF VFHM540	ﾁｪｰﾝ	2	
-	22438-45731		CHAIN,LEAF VFHM550	ﾁｪｰﾝ	2	
-	22438-45811		CHAIN,LEAF VFHM600	ﾁｪｰﾝ	2	
-	22438-45891		CHAIN,LEAF VFHM650	ﾁｪｰﾝ	2	
-	22438-45991		CHAIN,LEAF VFHM700	ﾁｪｰﾝ	2	
-	22438-46051		CHAIN,LEAF VFHM750	ﾁｪｰﾝ	2	
-	09001-10039		CHAIN,LEAF VFHM360	ﾁｪｰﾝ	2	[FC][FCS35][FCS45][FCS55]
-	09001-10043		CHAIN,LEAF VFHM400	ﾁｪｰﾝ	2	[FC][FCS35][FCS45][FCS55]
-	09001-10047		CHAIN,LEAF VFHM435	ﾁｪｰﾝ	2	[FC][FCS35][FCS45][FCS55]
-	09001-10051		CHAIN,LEAF VFHM480	ﾁｪｰﾝ	2	[FC][FCS35][FCS45][FCS55]
-	09001-10053		CHAIN,LEAF VFHM500	ﾁｪｰﾝ	2	[FC][FCS35][FCS45][FCS55]
-	09001-10057		CHAIN,LEAF VFHM540	ﾁｪｰﾝ	2	[FC][FCS35][FCS45][FCS55]
-	09001-10059		CHAIN,LEAF VFHM550	ﾁｪｰﾝ	2	[FC][FCS35][FCS45][FCS55]
-	09001-10065		CHAIN,LEAF VFHM600	ﾁｪｰﾝ	2	[FC][FCS35][FCS45][FCS55]
-	09001-10071		CHAIN,LEAF VFHM650	ﾁｪｰﾝ	2	[FC][FCS35][FCS45][FCS55]
-	09001-10079		CHAIN,LEAF VFHM700	ﾁｪｰﾝ	2	[FC][FCS35][FCS45][FCS55]
-	09001-10083		CHAIN,LEAF VFHM750	ﾁｪｰﾝ	2	[FC][FCS35][FCS45][FCS55]
23	24459-42391		PIN,ANCHOR	ﾋﾟﾝ	2	
-	22218-42111		PIN,ANCHOR	ﾋﾟﾝ	2	[FC][FCS35][FCS45][FCS55]
24	24459-42381		PIN,ANCHOR	ﾋﾟﾝ	2	
-	231A0-82001		PIN,ANCHOR	ﾋﾟﾝ	2	[FC][FCS35][FCS45][FCS55]
25	22218-40191		NUT	ﾅｯﾄ	4	
26	01400-00018		NUT	ﾅｯﾄ	4	
27	02200-03030		PIN,COTTER	ﾋﾟﾝ	4	
28	212Y0-82101		SUPPORT	ｻﾎﾟｰﾄ	1	
29	01103-10018		BOLT	ﾎﾞﾙﾄ	2	
30	02011-00010		WASHER	ﾜｯｼｬ	2	
31	214A0-82831		BOLT	ﾎﾞﾙﾄ	1	
32	02000-20016		WASHER	ﾜｯｼｬ	2	

M E M O

M E M O

FIG.173 LIFT CYLINDER (REAR) [VFHM2N9]

(M7020880) リフトシリンダ(リヤー)

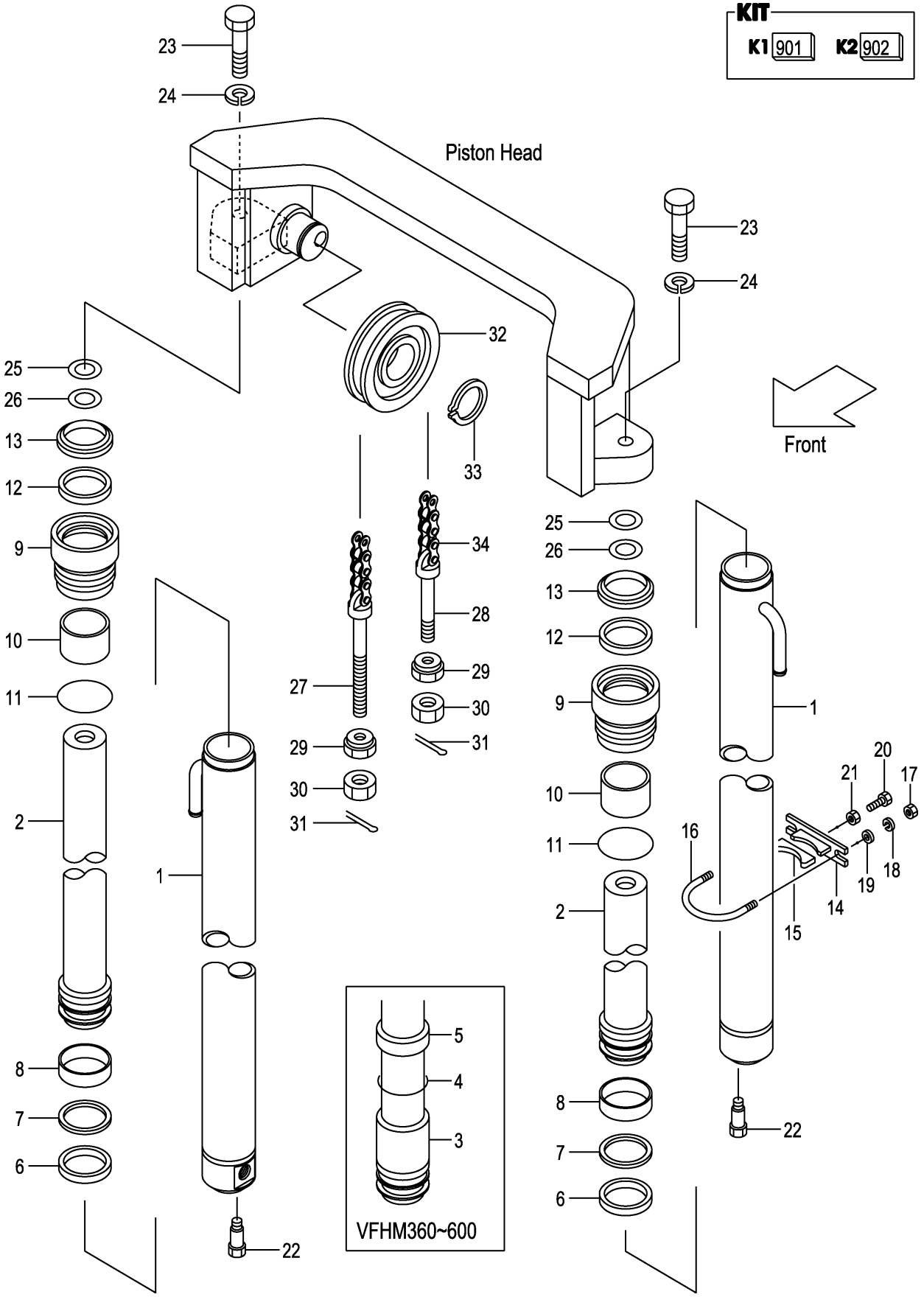

A:VFHM2N9(3T)

Item No	Part No.	Mark	Description		Req'd	Remarks : Serial No.
A1	22N90-81611		CYL-ASSY,LIFT VFHM360	ﾘﾌﾄｼﾘﾝﾀﾞｱｯｾﾝ	2	INC.1-13
-	22N90-81621		CYL-ASSY,LIFT VFHM400	ﾘﾌﾄｼﾘﾝﾀﾞｱｯｾﾝ	2	INC.1-13
-	22N90-81601		CYL-ASSY,LIFT VFHM435	ﾘﾌﾄｼﾘﾝﾀﾞｱｯｾﾝ	2	INC.1-13
-	22N90-81631		CYL-ASSY,LIFT VFHM480	ﾘﾌﾄｼﾘﾝﾀﾞｱｯｾﾝ	2	INC.1-13
-	22N90-81641		CYL-ASSY,LIFT VFHM500	ﾘﾌﾄｼﾘﾝﾀﾞｱｯｾﾝ	2	INC.1-13
-	22N90-81651		CYL-ASSY,LIFT VFHM540	ﾘﾌﾄｼﾘﾝﾀﾞｱｯｾﾝ	2	INC.1-13
-	22N90-81661		CYL-ASSY,LIFT VFHM550	ﾘﾌﾄｼﾘﾝﾀﾞｱｯｾﾝ	2	INC.1-13
-	22N90-81671		CYL-ASSY,LIFT VFHM600	ﾘﾌﾄｼﾘﾝﾀﾞｱｯｾﾝ	2	INC.1-13
-	22N90-81681		CYL-ASSY,LIFT VFHM650	ﾘﾌﾄｼﾘﾝﾀﾞｱｯｾﾝ	2	INC.1,2,6-13
-	22N90-81691		CYL-ASSY,LIFT VFHM700	ﾘﾌﾄｼﾘﾝﾀﾞｱｯｾﾝ	2	INC.1,2,6-13
-	22N90-81701		CYL-ASSY,LIFT VFHM750	ﾘﾌﾄｼﾘﾝﾀﾞｱｯｾﾝ	2	INC.1,2,6-13
901	B-3055B-00097	K1	KIT,CYL-HEAD	ﾍｯﾄﾞｷｯﾄ	2	INC.9,10
902	B-3055A-00058	K2	KIT,REPAIR	ﾘﾍﾟｱｷｯﾄ	2	INC.6,7,11-13
1	B-B6567-14601		BODY,CYL VFHM360	ﾎﾞﾃﾞｨ	2	
-	B-B6567-14701		BODY,CYL VFHM400	ﾎﾞﾃﾞｨ	2	
-	B-B6567-14801		BODY,CYL VFHM435	ﾎﾞﾃﾞｨ	2	
-	B-B6567-14901		BODY,CYL VFHM480	ﾎﾞﾃﾞｨ	2	
-	B-B6567-15001		BODY,CYL VFHM500	ﾎﾞﾃﾞｨ	2	
-	B-B6567-15101		BODY,CYL VFHM540	ﾎﾞﾃﾞｨ	2	
-	B-B6567-15201		BODY,CYL VFHM550	ﾎﾞﾃﾞｨ	2	
-	B-B6567-15301		BODY,CYL VFHM600	ﾎﾞﾃﾞｨ	2	
-	B-B6567-15401		BODY,CYL VFHM650	ﾎﾞﾃﾞｨ	2	
-	B-B6567-15501		BODY,CYL VFHM700	ﾎﾞﾃﾞｨ	2	
-	B-B6567-15601		BODY,CYL VFHM750	ﾎﾞﾃﾞｨ	2	
2	B-B6567-14602		ROD,PISTON VFHM360	ﾛｯﾄﾞ	2	
-	B-B6567-14702		ROD,PISTON VFHM400	ﾛｯﾄﾞ	2	
-	B-B6567-14802		ROD,PISTON VFHM435	ﾛｯﾄﾞ	2	
-	B-B6567-14902		ROD,PISTON VFHM480	ﾛｯﾄﾞ	2	
-	B-B6567-15002		ROD,PISTON VFHM500	ﾛｯﾄﾞ	2	
-	B-B6567-15102		ROD,PISTON VFHM540	ﾛｯﾄﾞ	2	
-	B-B6567-15202		ROD,PISTON VFHM550	ﾛｯﾄﾞ	2	
-	B-B6567-15302		ROD,PISTON VFHM600	ﾛｯﾄﾞ	2	
-	B-B6567-15402		ROD,PISTON VFHM650	ﾛｯﾄﾞ	2	
-	B-B6567-15502		ROD,PISTON VFHM700	ﾛｯﾄﾞ	2	
-	B-B6567-15602		ROD,PISTON VFHM750	ﾛｯﾄﾞ	2	
3	B-B6111-45079		SPACER	ｽﾍﾟｰｻ	2	(VFHM360-480)
-	B-B6111-45080		SPACER	ｽﾍﾟｰｻ	2	(VFHM500)
-	B-B6111-45081		SPACER	ｽﾍﾟｰｻ	2	(VFHM540)
-	B-B6111-45080		SPACER	ｽﾍﾟｰｻ	2	(VFHM550)
-	B-B6111-45075		SPACER	ｽﾍﾟｰｻ	2	(VFHM600)
4	B-95151-04500		O-RING	Oﾘﾝｸﾞ	2	(VFHM360-600)
5	B-30656-55008		WEARING	ｳｪｱﾘﾝｸﾞ	2	(VFHM360-600)
6	B-30161-55046	*	U-RING	Uﾘﾝｸﾞ	2	
7	B-30461-55039	*	RING,BACK-UP	ﾘﾝｸﾞ	2	
8	B-30131-55018		WEARING	ｳｪｱﾘﾝｸﾞ	2	
9	B-30121-55043	*	CAP,CYL	ｷｬｯﾌﾟ	2	
10	B-30131-45017	*	BUSHING	ﾌﾞｯｼﾝｸﾞ	2	
11	B-30161-91775	*	O-RING	Oﾘﾝｸﾞ	2	
12	B-30961-04512	*	PACKING	ﾊﾟｯｷﾝｸﾞ	2	
13	B-30191-45025	*	SEAL,DUST	ｼｰﾙ	2	

FIG.173 LIFT CYLINDER (REAR) [VFHM2N9]

(M7020880) リフトシリンダ(リヤー)

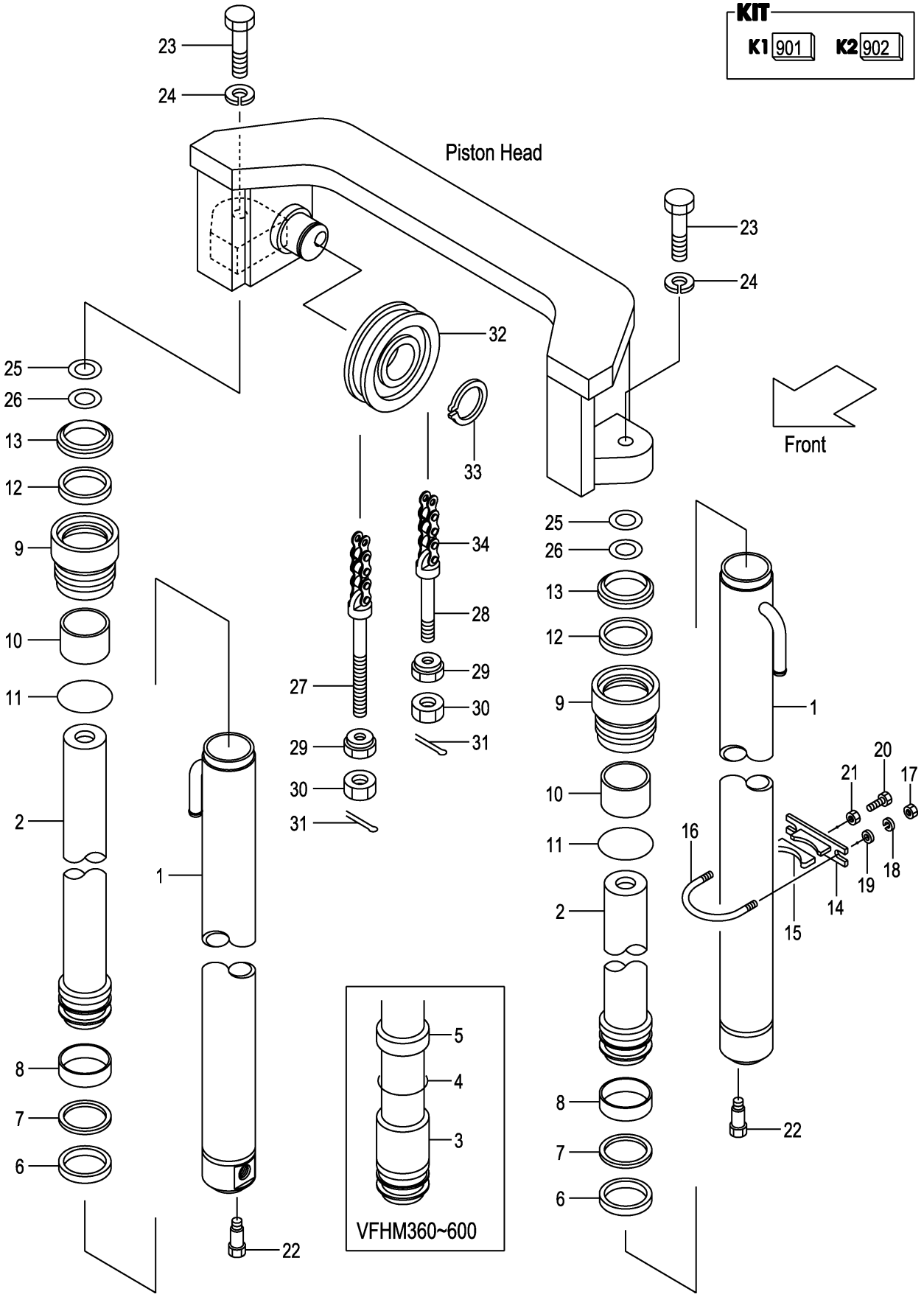

A:VFHM2N9(3T)

Item No	Part No.	Mark	Description		Req'd	Remarks : Serial No.
A2	215E8-42171		SUPPORT-ASSY	ｻﾎﾟｰﾄｱｯｾﾝ	2	(VFHM360-550) INC.14,15
-	215E8-42171		SUPPORT-ASSY	ｻﾎﾟｰﾄｱｯｾﾝ	4	(VFHM600-750) INC.14,15
14	215E8-42181		SUPPORT	ｻﾎﾟｰﾄ	2	(VFHM360-550)
-	215E8-42181		SUPPORT	ｻﾎﾟｰﾄ	4	(VFHM600-750)
15	24868-42111		RUBBER	ﾗﾊﾞｰ	2	(VFHM360-550)
-	24868-42111		RUBBER	ﾗﾊﾞｰ	4	(VFHM600-750)
16	234A8-42551		U-BOLT	Uﾎﾞﾙﾄ	2	(VFHM360-550)
-	234A8-42551		U-BOLT	Uﾎﾞﾙﾄ	4	(VFHM600-750)
17	234A8-42561		NUT	ﾅｯﾄ	4	(VFHM360-550)
-	234A8-42561		NUT	ﾅｯﾄ	8	(VFHM600-750)
18	02010-20010		WASHER	ﾜｯｼｬ	4	(VFHM360-550)
-	02010-20010		WASHER	ﾜｯｼｬ	8	(VFHM600-750)
19	02000-20010		WASHER	ﾜｯｼｬ	4	(VFHM360-550)
-	02000-20010		WASHER	ﾜｯｼｬ	8	(VFHM600-750)
20	232A8-42201		BOLT	ﾎﾞﾙﾄ	2	(VFHM360-550)
-	232A8-42201		BOLT	ﾎﾞﾙﾄ	4	(VFHM600-750)
21	234A8-42571		NUT	ﾅｯﾄ	2	(VFHM360-550)
-	234A8-42571		NUT	ﾅｯﾄ	4	(VFHM600-750)
22	214A8-42661		BOLT	ﾎﾞﾙﾄ	2	
23	01103-14040		BOLT	ﾎﾞﾙﾄ	2	
24	02011-00014		WASHER	ﾜｯｼｬ	2	
25	22517-40051		SHIM,T-1.0	ｼﾑ	10	
26	22717-40081		SHIM,T-0.5	ｼﾑ	10	
27	24459-42391		PIN,ANCHOR	ﾋﾟﾝ	2	
-	22218-42111		PIN,ANCHOR	ﾋﾟﾝ	2	[FC][FCS35][FCS45][FCS55]
28	215K0-82701		PIN,ANCHOR	ﾋﾟﾝ	2	
-	23658-42531		PIN,ANCHOR	ﾋﾟﾝ	2	[FC][FCS35][FCS45][FCS55]
29	22218-40191		NUT	ﾅｯﾄ	4	
30	01400-00018		NUT	ﾅｯﾄ	4	
31	02200-03030		PIN,COTTER	ﾋﾟﾝ	4	
32	234A8-43501		SHEAVE	ｼｰﾌﾞ	2	
-	22208-40031		SHEAVE	ｼｰﾌﾞ	2	[FC][FCS35][FCS45][FCS55]
33	02100-00040		RING,SNAP	ｽﾅｯﾌﾟﾘﾝｸﾞ	2	
34	22438-45631		CHAIN,LEAF VFHM360	ﾁｪｰﾝ	2	
-	22438-45691		CHAIN,LEAF VFHM400	ﾁｪｰﾝ	2	
-	22438-45731		CHAIN,LEAF VFHM435	ﾁｪｰﾝ	2	
-	22438-45791		CHAIN,LEAF VFHM480	ﾁｪｰﾝ	2	
-	22438-45831		CHAIN,LEAF VFHM500	ﾁｪｰﾝ	2	
-	22438-45891		CHAIN,LEAF VFHM540	ﾁｪｰﾝ	2	
-	22438-45891		CHAIN,LEAF VFHM550	ﾁｪｰﾝ	2	
-	22438-45971		CHAIN,LEAF VFHM600	ﾁｪｰﾝ	2	
-	22438-46051		CHAIN,LEAF VFHM650	ﾁｪｰﾝ	2	
-	22438-46151		CHAIN,LEAF VFHM700	ﾁｪｰﾝ	2	
-	22438-46211		CHAIN,LEAF VFHM750	ﾁｪｰﾝ	2	
-	09001-10051		CHAIN,ROLLER VFHM360	ﾁｪｰﾝ	2	[FC][FCS35][FCS45][FCS55]
-	09001-10055		CHAIN,ROLLER VFHM400	ﾁｪｰﾝ	2	[FC][FCS35][FCS45][FCS55]
-	09001-10059		CHAIN,ROLLER VFHM435	ﾁｪｰﾝ	2	[FC][FCS35][FCS45][FCS55]
-	09001-10063		CHAIN,ROLLER VFHM480	ﾁｪｰﾝ	2	[FC][FCS35][FCS45][FCS55]
-	09001-10067		CHAIN,ROLLER VFHM500	ﾁｪｰﾝ	2	[FC][FCS35][FCS45][FCS55]
-	09001-10071		CHAIN,ROLLER VFHM540	ﾁｪｰﾝ	2	[FC][FCS35][FCS45][FCS55]

FIG.173 LIFT CYLINDER (REAR) [VFHM2N9]

(M7020880) リフトシリンダ(リヤー)

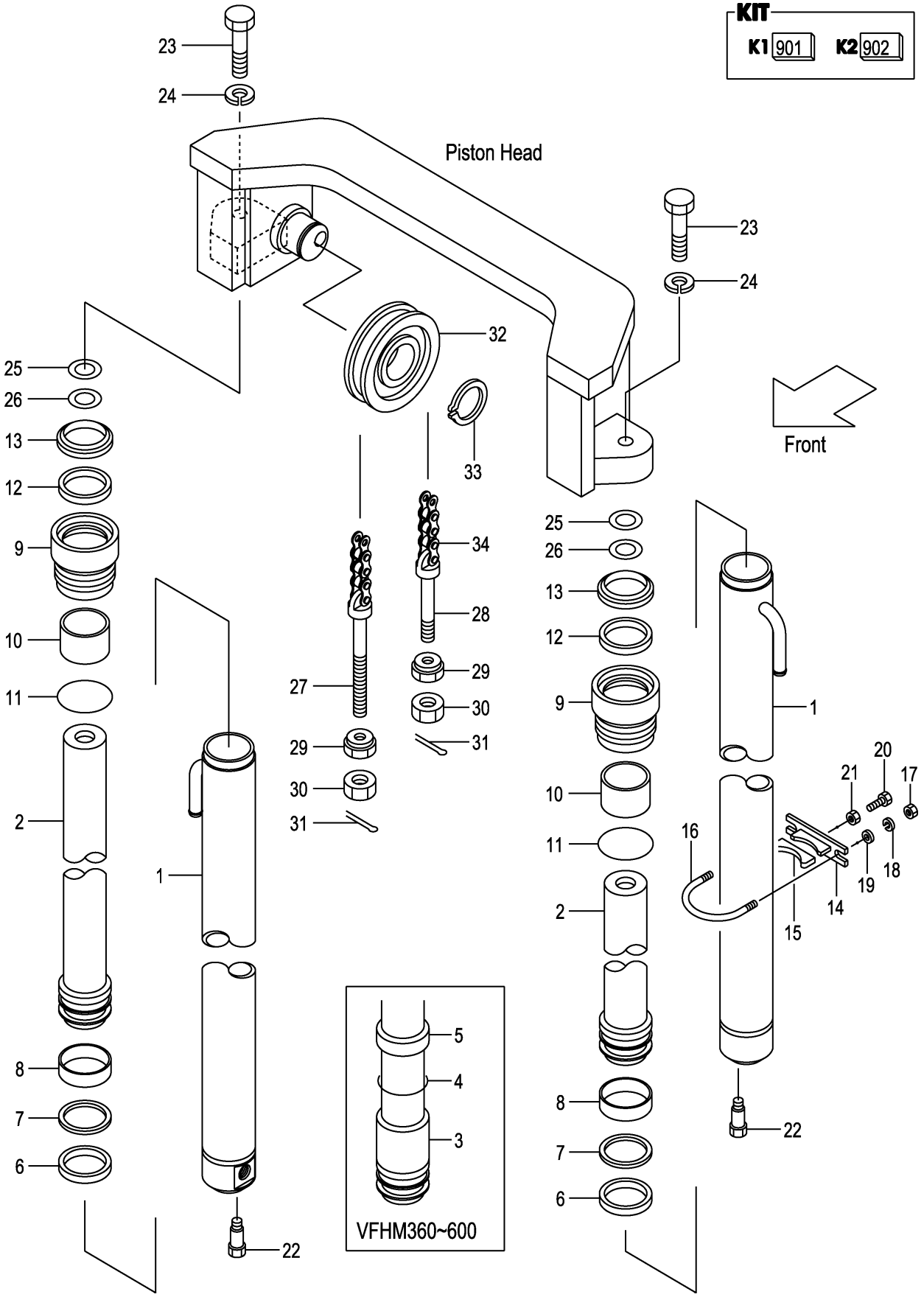

A:VFHM2N9(3T)

Item No	Part No.	Mark	Description	Req'd	Remarks : Serial No.
-	09001-10071		CHAIN,ROLLER VFHM550 ﾁｪｰﾝ	2	[FC][FCS35][FCS45][FCS55]
-	09001-10077		CHAIN,ROLLER VFHM600 ﾁｪｰﾝ	2	[FC][FCS35][FCS45][FCS55]
-	09001-10085		CHAIN,ROLLER VFHM650 ﾁｪｰﾝ	2	[FC][FCS35][FCS45][FCS55]
-	09001-10091		CHAIN,ROLLER VFHM700 ﾁｪｰﾝ	2	[FC][FCS35][FCS45][FCS55]
-	09001-10097		CHAIN,ROLLER VFHM750 ﾁｪｰﾝ	2	[FC][FCS35][FCS45][FCS55]

FIG.174 MAST PIPING [VFHM2N9]

(M7020890) マストパイピング

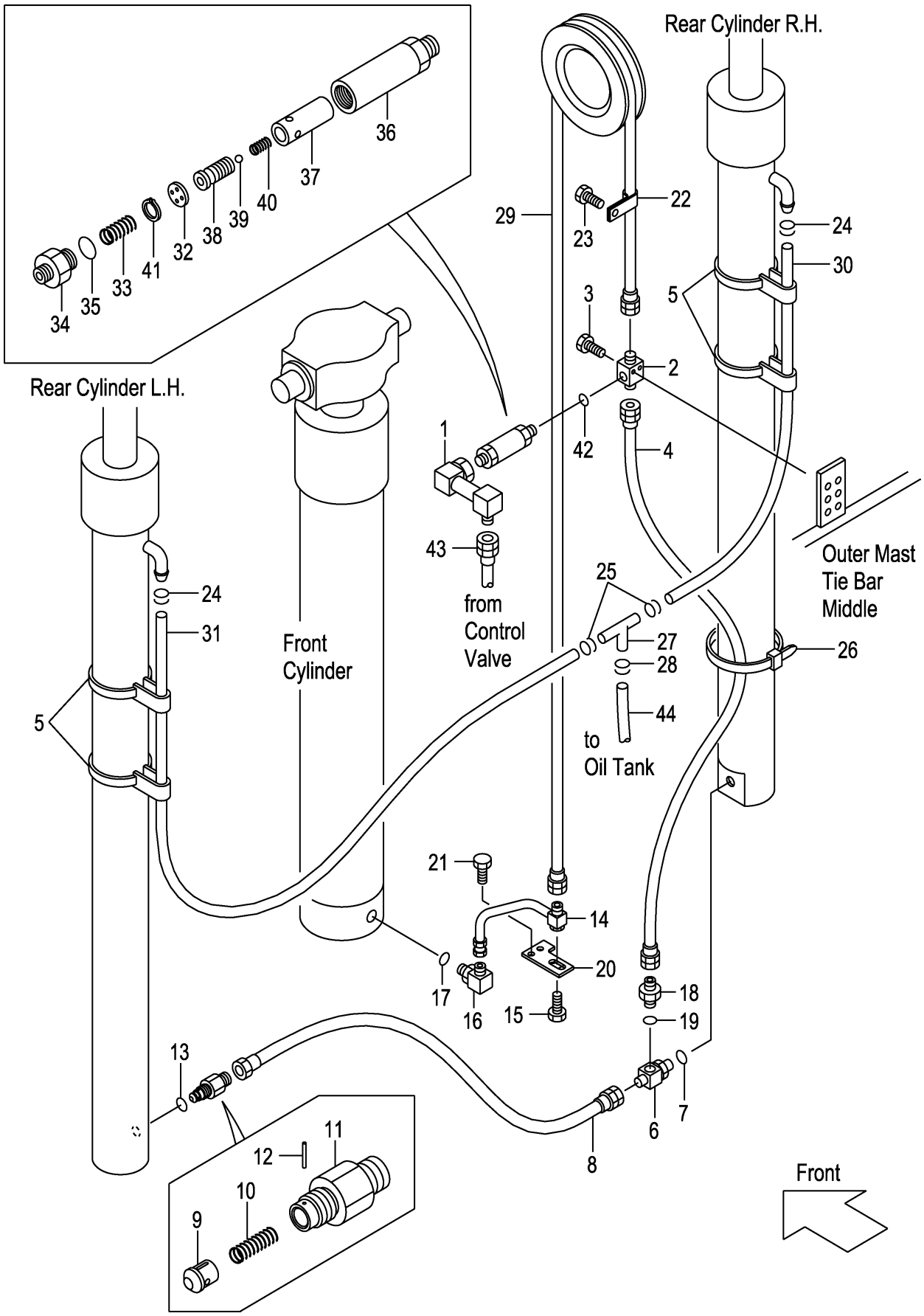

A:VFHM2N9(3T)

Item No	Part No.	Mark	Description		Req'd	Remarks : Serial No.
1	22N90-90161		PIPE	ﾊﾟｲﾌﾟ	1	
2	229F0-94101		THREE-WAY	ｽﾘｰｳｪｲ	1	
3	01184-10040		BOLT	ﾎﾞﾙﾄ	2	
4	216G0-93151		HOSE	ﾎｰｽ	1	
5	22N58-45001		BAND	ﾊﾞﾝﾄﾞ	4	
A1	216G0-93101		THREE-WAY-ASSY	ｽﾘｰｳｪｲｱｯｾﾝ	1	INC.6,7
6	NO PART NO.	#	THREE-WAY	ｽﾘｰｳｪｲ	1	
7	03320-00140		O-RING	Oﾘﾝｸﾞ	1	
8	22N50-92101		HOSE	ﾎｰｽ	1	
A2	234A8-40701		VALVE-ASSY,CUT	ｶｯﾄﾊﾞﾙﾌﾞｱｯｾﾝ	1	INC.9-13
9	234A8-42602		PISTON	ﾋﾟｽﾄﾝ	1	
10	234A8-42611		SPRING	ｽﾌﾟﾘﾝｸﾞ	1	
11	234A8-42622		NIPPLE	ﾆｯﾌﾟﾙ	1	
12	02270-01014		PIN	ﾋﾟﾝ	1	
13	03320-00140		O-RING	Oﾘﾝｸﾞ	1	
14	22N90-90152		PIPE	ﾊﾟｲﾌﾟ	1	
15	01186-10020		BOLT	ﾎﾞﾙﾄ	1	
A3	04150-20404		ELBOW-ASSY	ｴﾙﾎﾞｱｯｾﾝ	1	INC.16,17
16	NO PART NO.	#	ELBOW	ｴﾙﾎﾞ	1	
17	03320-00180		O-RING	Oﾘﾝｸﾞ	1	
A4	04134-20404		NIPPLE-ASSY	ﾆｯﾌﾟﾙｱｯｾﾝ	1	INC.18,19
18	NO PART NO.	#	NIPPLE	ﾆｯﾌﾟﾙ	1	
19	03320-00180		O-RING	Oﾘﾝｸﾞ	1	
20	22N50-73191		PLATE	ﾌﾟﾚｰﾄ	1	
21	01185-08020		BOLT	ﾎﾞﾙﾄ	2	
22	26602-42101		CLIP	ｸﾘｯﾌﾟ	1	
23	01184-10012		BOLT	ﾎﾞﾙﾄ	1	
24	24329-46201		CLIP	ｸﾘｯﾌﾟ	2	
25	04911-00021		CLIP	ｸﾘｯﾌﾟ	2	
26	25790-94021		BAND,HOSE	ﾊﾞﾝﾄﾞ	1	
27	53675-55051		THREE-WAY	ｽﾘｰｳｪｲ	1	
28	04911-00021		CLIP	ｸﾘｯﾌﾟ	2	
29	04601-44241		HOSE,HP VFHM360	ﾎｰｽ	1	
-	04601-44266		HOSE,HP VFHM400	ﾎｰｽ	1	
-	04601-44290		HOSE,HP VFHM435	ﾎｰｽ	1	
-	04601-44320		HOSE,HP VFHM480	ﾎｰｽ	1	
-	04601-44339		HOSE,HP VFHM500	ﾎｰｽ	1	
-	04601-44364		HOSE,HP VFHM540	ﾎｰｽ	1	
-	04601-44371		HOSE,HP VFHM550	ﾎｰｽ	1	
-	04601-44408		HOSE,HP VFHM600	ﾎｰｽ	1	
-	04601-44450		HOSE,HP VFHM650	ﾎｰｽ	1	
-	04601-44493		HOSE,HP VFHM700	ﾎｰｽ	1	
-	04601-44525		HOSE,HP VFHM750	ﾎｰｽ	1	
30	04710-04150		HOSE,RH VFHM360	ﾎｰｽ	1	
-	04710-04165		HOSE,RH VFHM400	ﾎｰｽ	1	
-	04710-04175		HOSE,RH VFHM435	ﾎｰｽ	1	
-	04710-04190		HOSE,RH VFHM480	ﾎｰｽ	1	
-	04710-04200		HOSE,RH VFHM500	ﾎｰｽ	1	
-	04710-04215		HOSE,RH VFHM540	ﾎｰｽ	1	
-	04710-04200		HOSE,RH VFHM550	ﾎｰｽ	1	

FIG.174 MAST PIPING [VFHM2N9]

(M7020890) マストパイピング

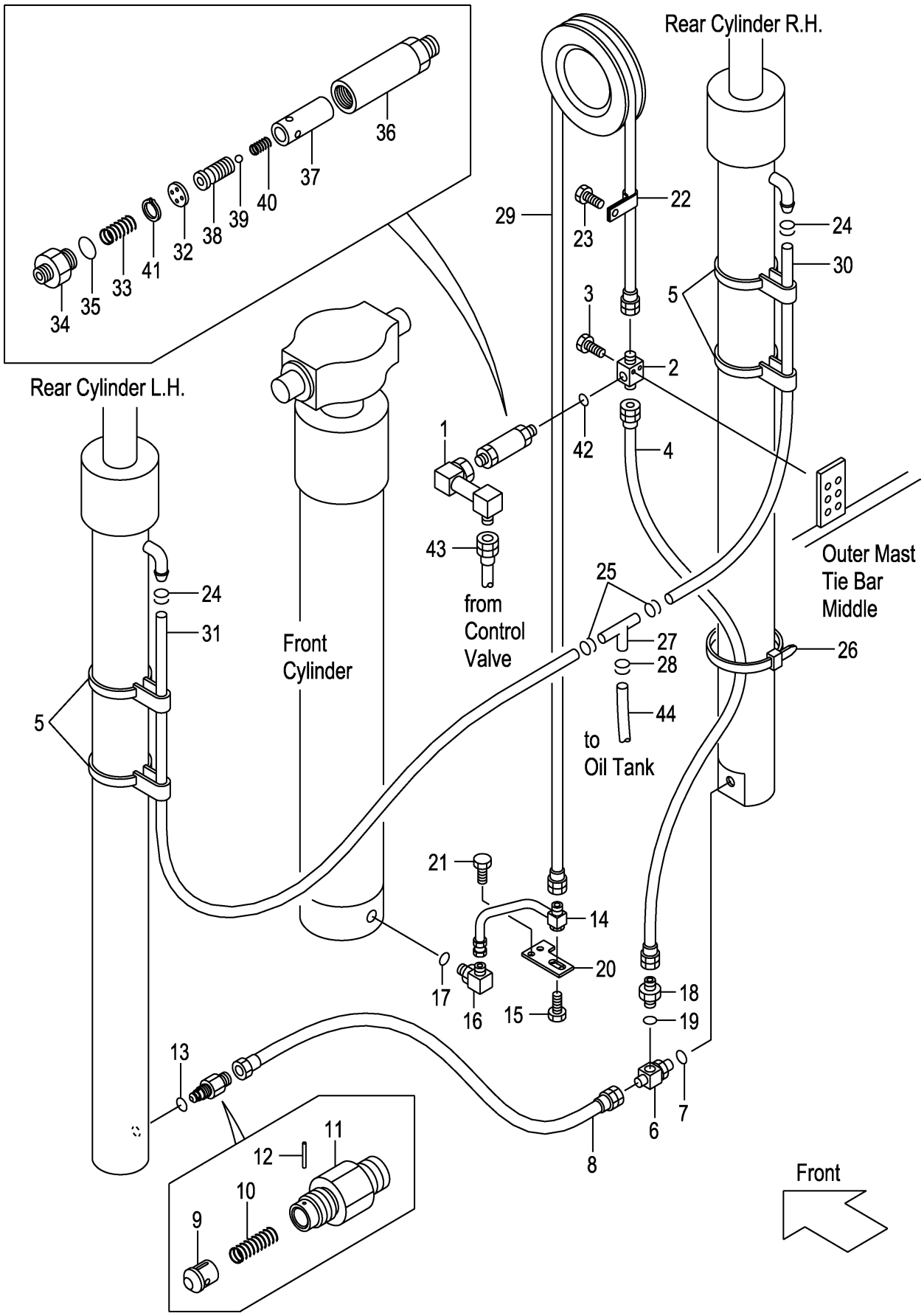

A:VFHM2N9(3T)

Item No	Part No.	Mark	Description		Req'd	Remarks : Serial No.
-	04710-04235		HOSE,RH VFHM600	ﾎｰｽ	1	
-	04710-04260		HOSE,RH VFHM650	ﾎｰｽ	1	
-	04710-04280		HOSE,RH VFHM700	ﾎｰｽ	1	
-	04710-04295		HOSE,RH VFHM750	ﾎｰｽ	1	
31	04710-04155		HOSE,LH VFHM360	ﾎｰｽ	1	
-	04710-04170		HOSE,LH VFHM400	ﾎｰｽ	1	
-	04710-04180		HOSE,LH VFHM435	ﾎｰｽ	1	
-	04710-04195		HOSE,LH VFHM480	ﾎｰｽ	1	
-	04710-04205		HOSE,LH VFHM500	ﾎｰｽ	1	
-	04710-04220		HOSE,LH VFHM540	ﾎｰｽ	1	
-	04710-04225		HOSE,LH VFHM550	ﾎｰｽ	1	
-	04710-04240		HOSE,LH VFHM600	ﾎｰｽ	1	
-	04710-04265		HOSE,LH VFHM650	ﾎｰｽ	1	
-	04710-04285		HOSE,LH VFHM700	ﾎｰｽ	1	
-	04710-04300		HOSE,LH VFHM750	ﾎｰｽ	1	
A5	234F8-41001		REGULATOR-ASSY,FLOW	ﾌﾛｰﾚｷﾞｭﾚｰﾀｱｯｾﾝ	1	INC.32-41
32	NO PART NO.	#	PLATE	ﾌﾟﾚｰﾄ	1	
33	27979-43101		SPRING	ｽﾌﾟﾘﾝｸﾞ	1	
34	NO PART NO.	#	NIPPLE	ﾆｯﾌﾟﾙ	1	
35	03300-00280		O-RING	Oﾘﾝｸﾞ	1	
36	NO PART NO.	#	CASE	ｹｰｽ	1	
37	NO PART NO.	#	SLEEVE	ｽﾘｰﾌﾞ	1	
38	NO PART NO.	#	PISTON	ﾋﾟｽﾄﾝ	1	
39	24459-42951		BALL,NYLON	ﾎﾞｰﾙ	1	
40	214A8-44151		SPRING	ｽﾌﾟﾘﾝｸﾞ	1	
41	02110-00018		RING,SNAP	ｽﾅｯﾌﾟﾘﾝｸﾞ	1	
42	03320-00180		O-RING	Oﾘﾝｸﾞ	1	
43	277N0-82021		HOSE	ﾎｰｽ	1	
44	04710-04150		HOSE	ﾎｰｽ	1	

M E M O

M E M O

FIG.175 FORK [VFHM2N8]

(M7028190) フォーク

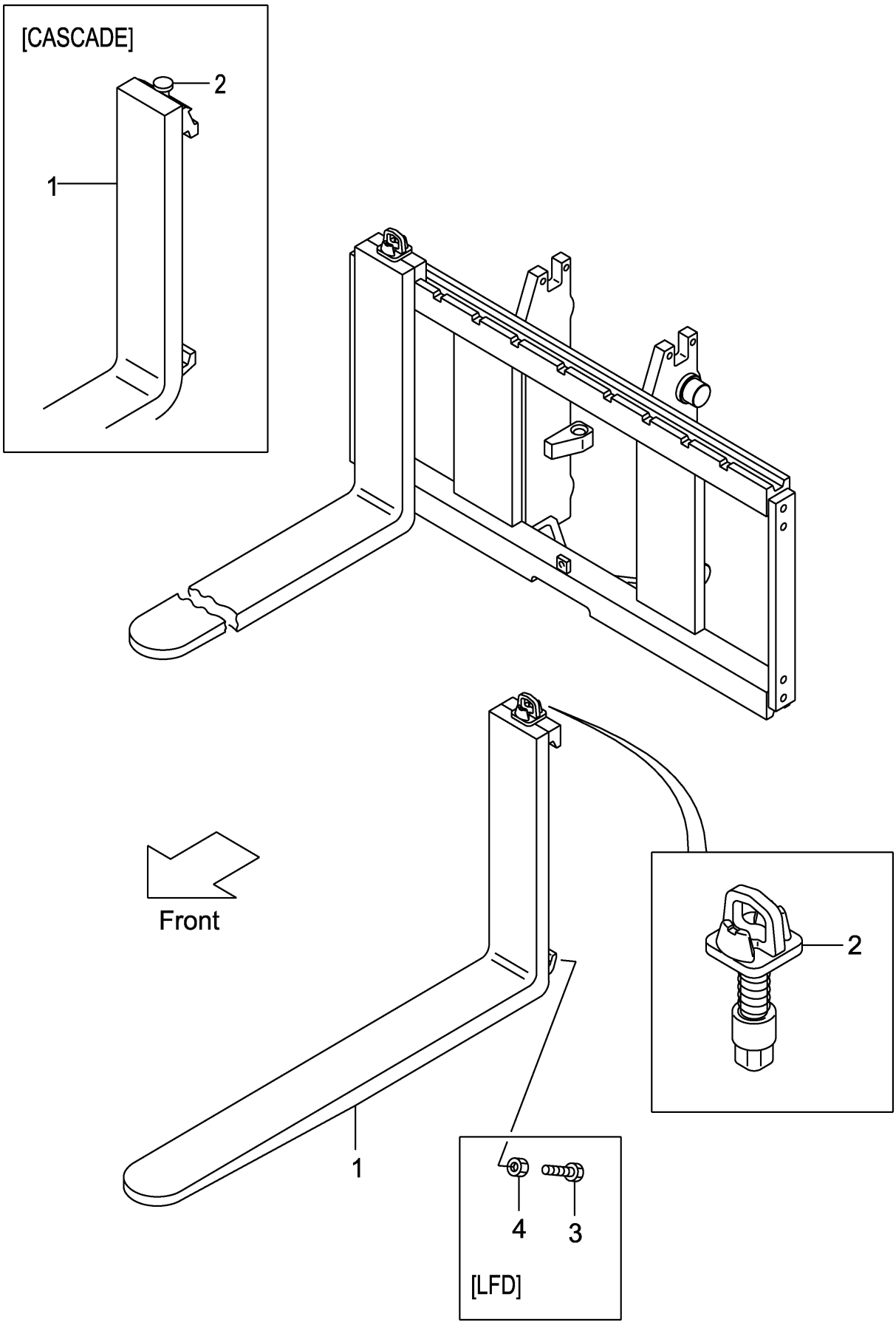

A:VFHM2N8(3T)

Item No	Part No.	Mark	Description		Req'd	Remarks : Serial No.
1	214J8-10501		FORK	ﾌｫｰｸ	2	(L=1070) INC.2
-	214J8-10581		FORK	ﾌｫｰｸ	2	[LF100] INC.2
-	214J8-10501		FORK	ﾌｫｰｸ	2	[LF107] INC.2
-	214J8-10591		FORK	ﾌｫｰｸ	2	[LF110] INC.2
-	214J8-10601		FORK	ﾌｫｰｸ	2	[LF120] INC.2
-	214J8-10511		FORK	ﾌｫｰｸ	2	[LF122] INC.2
-	214J8-10611		FORK	ﾌｫｰｸ	2	[LF130] INC.2
-	214J8-10521		FORK	ﾌｫｰｸ	2	[LF137] INC.2
-	214J8-10621		FORK	ﾌｫｰｸ	2	[LF140] INC.2
-	214J8-10631		FORK	ﾌｫｰｸ	2	[LF150] INC.2
-	214J8-10531		FORK	ﾌｫｰｸ	2	[LF152] INC.2
-	214J8-10641		FORK	ﾌｫｰｸ	2	[LF160] INC.2
-	214J8-10541		FORK	ﾌｫｰｸ	2	[LF167] INC.2
-	214J8-10651		FORK	ﾌｫｰｸ	2	[LF170] INC.2
-	214J8-10661		FORK	ﾌｫｰｸ	2	[LF180] INC.2
-	214J8-10551		FORK	ﾌｫｰｸ	2	[LF182] INC.2
-	214J8-10671		FORK	ﾌｫｰｸ	2	[LF190] INC.2
-	214J8-10561		FORK	ﾌｫｰｸ	2	[LF197] INC.2
-	214J8-10681		FORK	ﾌｫｰｸ	2	[LF200] INC.2
-	214J8-10571		FORK	ﾌｫｰｸ	2	[LF212] INC.2
-	234F8-10581		FORK	ﾌｫｰｸ	2	[LFD100] INC.2
-	234F8-10501		FORK	ﾌｫｰｸ	2	[LFD107] INC.2
-	234F8-10591		FORK	ﾌｫｰｸ	2	[LFD110] INC.2
-	234F8-10601		FORK	ﾌｫｰｸ	2	[LFD120] INC.2
-	234F8-10511		FORK	ﾌｫｰｸ	2	[LFD122] INC.2
-	234F8-10611		FORK	ﾌｫｰｸ	2	[LFD130] INC.2
-	234F8-10521		FORK	ﾌｫｰｸ	2	[LFD137] INC.2
-	234F8-10621		FORK	ﾌｫｰｸ	2	[LFD140] INC.2
-	234F8-10631		FORK	ﾌｫｰｸ	2	[LFD150] INC.2
-	234F8-10531		FORK	ﾌｫｰｸ	2	[LFD152] INC.2
-	234F8-10641		FORK	ﾌｫｰｸ	2	[LFD160] INC.2
-	234F8-10541		FORK	ﾌｫｰｸ	2	[LFD167] INC.2
-	234F8-10651		FORK	ﾌｫｰｸ	2	[LFD170] INC.2
-	234F8-10661		FORK	ﾌｫｰｸ	2	[LFD180] INC.2
-	234F8-10551		FORK	ﾌｫｰｸ	2	[LFD182] INC.2
-	234F8-10671		FORK	ﾌｫｰｸ	2	[LFD190] INC.2
-	234F8-10561		FORK	ﾌｫｰｸ	2	[LFD197] INC.2
-	234F8-10681		FORK	ﾌｫｰｸ	2	[LFD200] INC.2
-	234F8-10571		FORK	ﾌｫｰｸ	2	[LFD212] INC.2
-	22N98-10501		FORK	ﾌｫｰｸ	2	[LF107/CASCADE] INC.2
-	22N98-10511		FORK	ﾌｫｰｸ	2	[LF122/CASCADE] INC.2
2	214J8-11002		STOPPER,FORK	ｽﾄｯﾊﾟ	2	
-	W-K3PK-M		KIT,PIN,STOPPER	ｽﾄｯﾊﾟｷｯﾄ	2	[CASCADE]
3	234F8-12101		BOLT	ﾎﾞﾙﾄ	4	[LFD100-212]
4	01402-00010		NUT	ﾅｯﾄ	4	[LFD100-212]

FIG.176 LIFT BRACKET [VFHM2N8]

(M7020940) ﾘﾌﾄﾌﾞﾗｹｯﾄ

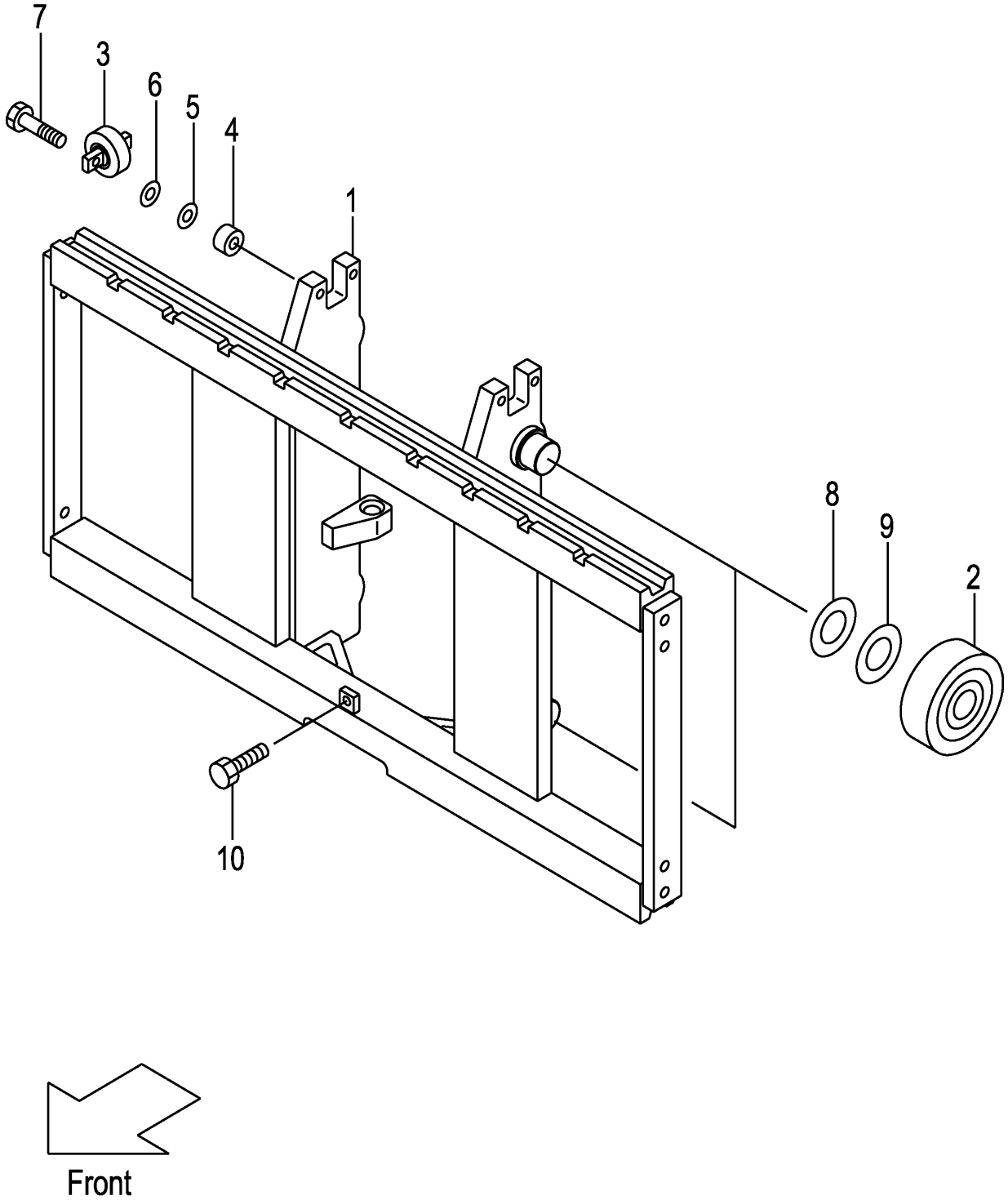

A:VFHM2N8(3T)

Item No	Part No.	Mark	Description		Req'd	Remarks : Serial No.
1	22N80-90201		BRACKET,LIFT	ﾌﾞﾗｹｯﾄ	1	
2	277P8-22051		ROLLER,END,119.0	ﾛｰﾗ	4	
-	277P8-22061		ROLLER,END,119.5	ﾛｰﾗ	(4)	
3	22N58-32701		ROLLER,SIDE	ﾛｰﾗ	2	
4	22N58-32711		SPACER	ｽﾍﾟｰｻ	4	
5	22018-30261		SHIM,T-0.5	ｼﾑ	4	
6	22018-30121		SHIM,T-1.0	ｼﾑ	4	
7	01103-10045		BOLT	ﾎﾞﾙﾄ	4	
8	277P8-22071		SHIM,T-0.5	ｼﾑ	5	
9	277P8-22081		SHIM,T-1.0	ｼﾑ	5	
10	01184-12025		BOLT & WASHER	ﾎﾞﾙﾄ & ﾜｯｼｬ	1	

FIG.177 BACKREST [VFHM2N8]

(M70282A0) ﾊﾞｯｸﾚｽﾄ

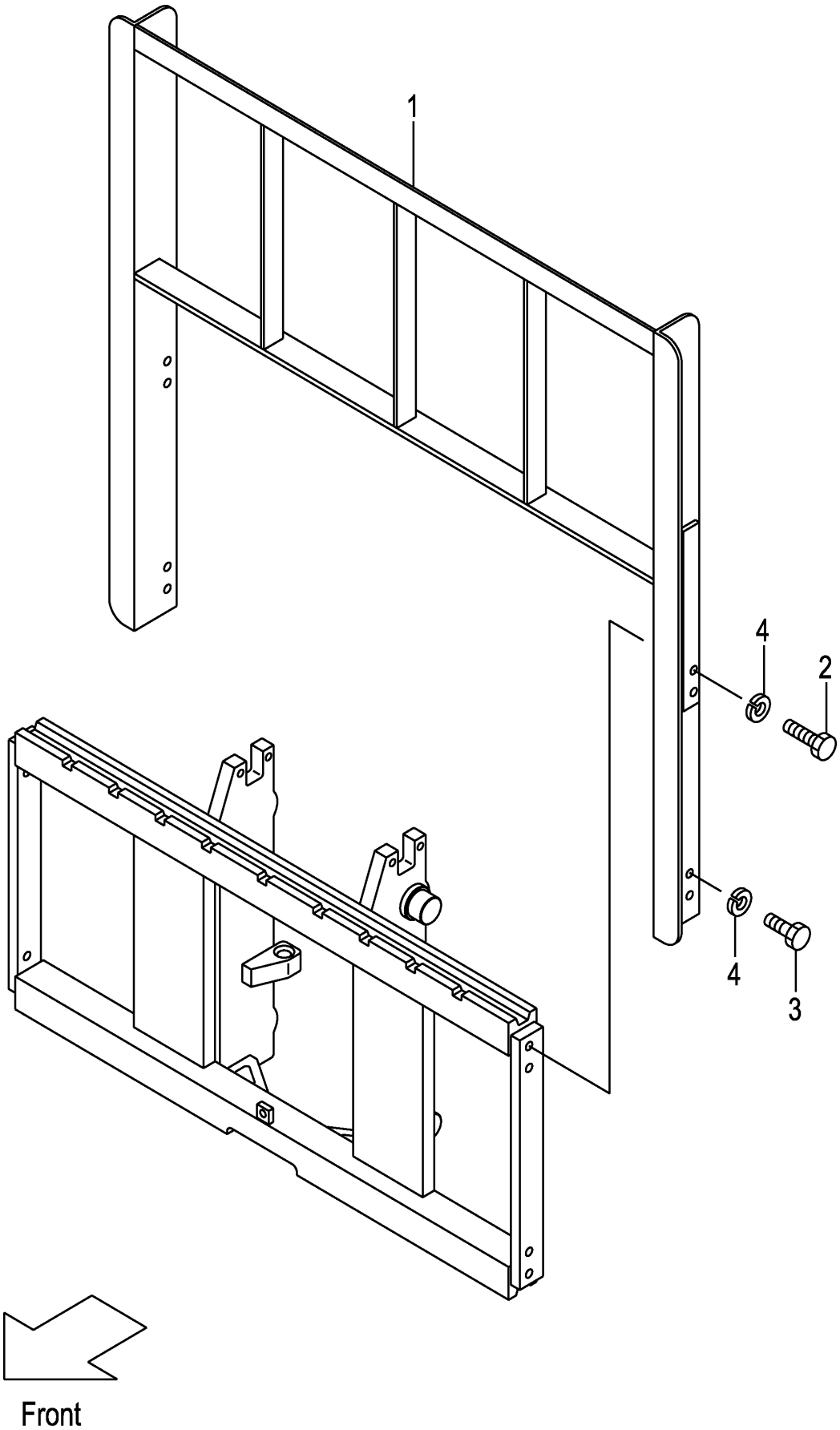

A:VFHM2N8(3T)

Item No	Part No.	Mark	Description		Req'd	Remarks : Serial No.
1	234F8-22201		BACKREST	ﾊﾞｯｸﾚｽﾄ	1	
2	01100-14030		BOLT	ﾎﾞﾙﾄ	4	
3	01100-14025		BOLT	ﾎﾞﾙﾄ	4	
4	02010-00014		WASHER	ﾜｯｼｬ	8	

FIG.178 MAST [VFHM2N8]

(M7020760) マスト

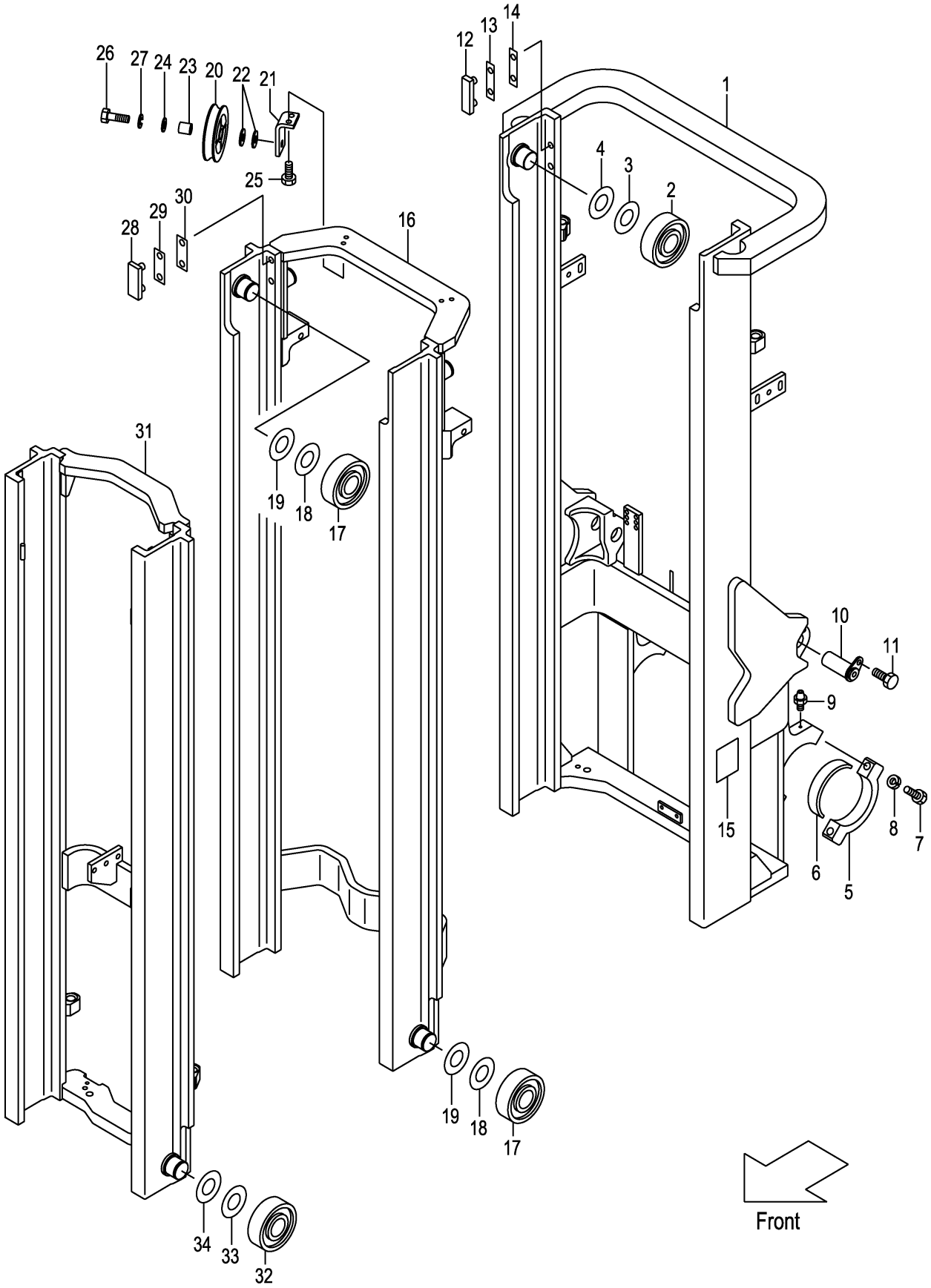

A:VFHM2N8(3T)

Item No	Part No.	Mark	Description		Req'd	Remarks : Serial No.
1	22N80-70201		MAST,OUTER VFHM435	ｱｳﾀﾏｽﾄ	1	
-	22N80-70231		MAST,OUTER VFHM480	ｱｳﾀﾏｽﾄ	1	
-	22N80-70241		MAST,OUTER VFHM500	ｱｳﾀﾏｽﾄ	1	
-	22N80-70251		MAST,OUTER VFHM540	ｱｳﾀﾏｽﾄ	1	
-	22N80-70261		MAST,OUTER VFHM550	ｱｳﾀﾏｽﾄ	1	
-	52N93-91901		MAST,OUTER VFHM435	ｱｳﾀﾏｽﾄ	1	[EXR][RW][HC]
-	52N93-91931		MAST,OUTER VFHM480	ｱｳﾀﾏｽﾄ	1	[EXR][RW][HC]
-	52N93-91941		MAST,OUTER VFHM500	ｱｳﾀﾏｽﾄ	1	[EXR][RW][HC]
-	52N93-91951		MAST,OUTER VFHM540	ｱｳﾀﾏｽﾄ	1	[EXR][RW][HC]
-	52N93-91961		MAST,OUTER VFHM550	ｱｳﾀﾏｽﾄ	1	[EXR][RW][HC]
2	277P8-22051		ROLLER,END,119.0	ﾛｰﾗ	2	
3	277P8-22071		SHIM,T-0.5	ｼﾑ	12	
4	277P8-22081		SHIM,T-1.0	ｼﾑ	12	
5	277P8-32701		CAP,MAST-SUPPORT	ｷｬｯﾌﾟ	2	
6	214A8-02201		BUSHING	ﾌﾞｯｼﾝｸﾞ	2	
7	01103-16065		BOLT	ﾎﾞﾙﾄ	4	
8	02011-00016		WASHER	ﾜｯｼｬ	4	
9	04901-00100		FITTING	ﾌｨｯﾃｨﾝｸﾞ	2	
10	272K8-52201		PIN	ﾋﾟﾝ	2	
11	216G8-52301		BOLT & WASHER	ﾎﾞﾙﾄ & ﾜｯｼｬ	2	
12	216G8-33401		SLIPPER	ｽﾘｯﾊﾟ	2	
13	216G8-33361		SHIM,T-0.5	ｼﾑ	8	
14	216G8-33371		SHIM,T-1.0	ｼﾑ	4	
15	23678-06002		PLATE,NAME	ﾌﾟﾚｰﾄ	1	
16	22N80-70401		MAST,MIDDLE VFHM435	ﾐﾄﾞﾙﾏｽﾄ	1	
-	22N80-70431		MAST,MIDDLE VFHM480	ﾐﾄﾞﾙﾏｽﾄ	1	
-	22N80-70441		MAST,MIDDLE VFHM500	ﾐﾄﾞﾙﾏｽﾄ	1	
-	22N80-70451		MAST,MIDDLE VFHM540	ﾐﾄﾞﾙﾏｽﾄ	1	
-	22N80-70461		MAST,MIDDLE VFHM550	ﾐﾄﾞﾙﾏｽﾄ	1	
17	277P8-22051		ROLLER,END,119.0	ﾛｰﾗ	4	
-	277P8-22061		ROLLER,END,119.5	ﾛｰﾗ	(2)	
18	277P8-22071		SHIM,T-0.5	ｼﾑ	15	
19	277P8-22081		SHIM,T-1.0	ｼﾑ	15	
20	63130-15301		PULLEY	ﾌﾟｰﾘ	1	
21	22N40-72191		BRACKET	ﾌﾞﾗｹｯﾄ	1	
22	62050-12331		SPACER	ｽﾍﾟｰｻ	2	
23	214A0-72701		COLLAR	ｶﾗｰ	1	
24	02000-00016		WASHER	ﾜｯｼｬ	1	
25	01184-10025		BOLT	ﾎﾞﾙﾄ	2	
26	01100-16050		BOLT	ﾎﾞﾙﾄ	1	
27	02010-00016		WASHER	ﾜｯｼｬ	1	
28	216G8-33351		SLIPPER	ｽﾘｯﾊﾟ	2	
29	216G8-33361		SHIM,T-0.5	ｼﾑ	4	
30	216G8-33371		SHIM,T-1.0	ｼﾑ	8	
31	22N80-70601		MAST,INNER VFHM435	ｲﾝﾅﾏｽﾄ	1	
-	22N80-70631		MAST,INNER VFHM480	ｲﾝﾅﾏｽﾄ	1	
-	22N80-70641		MAST,INNER VFHM500	ｲﾝﾅﾏｽﾄ	1	
-	22N80-70651		MAST,INNER VFHM540	ｲﾝﾅﾏｽﾄ	1	
-	22N80-70661		MAST,INNER VFHM550	ｲﾝﾅﾏｽﾄ	1	
32	277P8-22051		ROLLER,END,119.0	ﾛｰﾗ	2	

FIG.178 MAST [VFHM2N8]

(M7020760) マスト

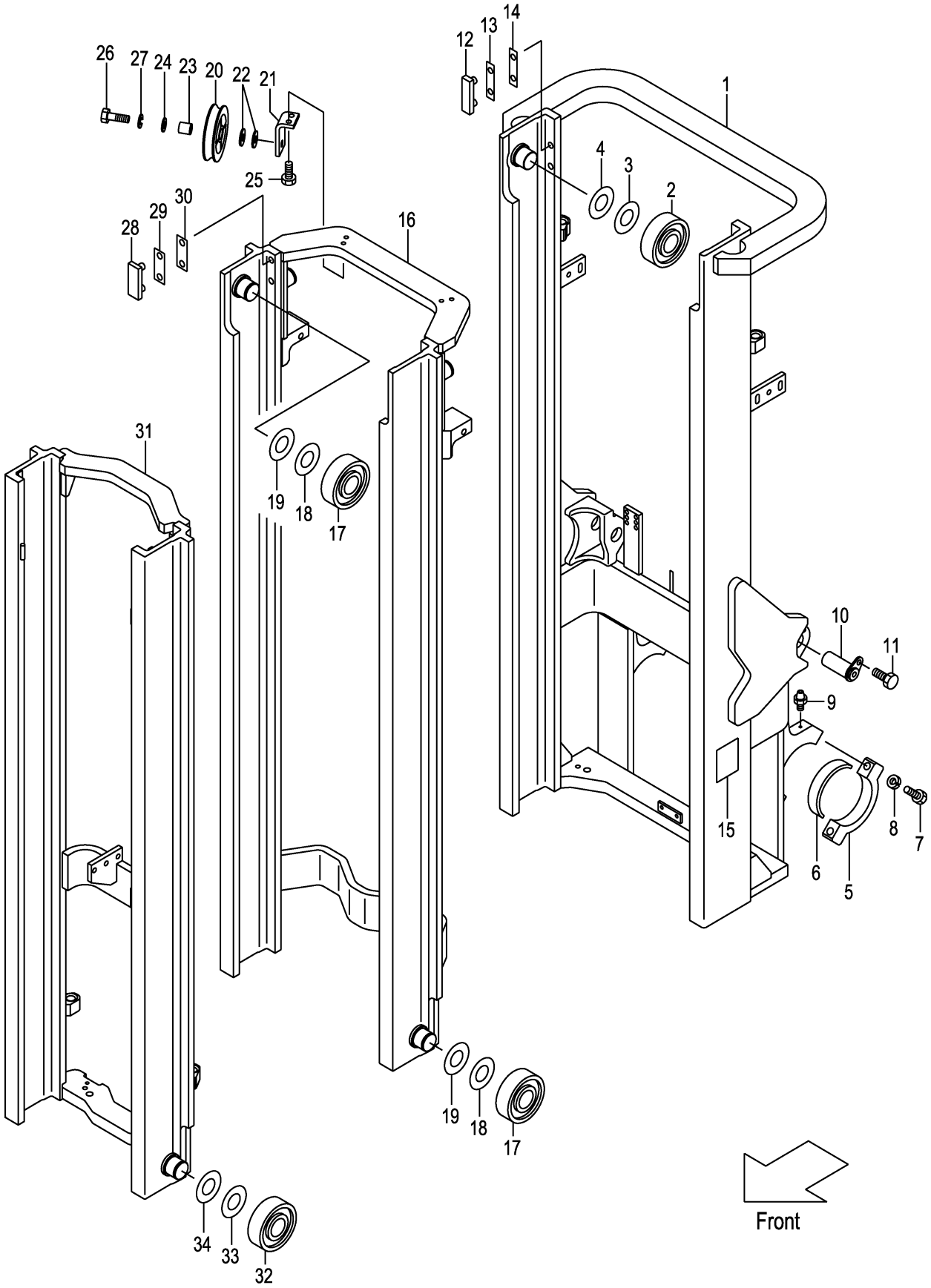

A:VFHM2N8(3T)

Item No	Part No.	Mark	Description	Req'd	Remarks : Serial No.
-	277P8-22061		ROLLER,END,119.5 ﾛｰﾗ	(2)	
33	277P8-22071		SHIM,T-0.5 ｼﾑ	12	
34	277P8-22081		SHIM,T-1.0 ｼﾑ	12	

M E M O

M E M O

FIG.179 LIFT CYLINDER (FRONT) [VFHM2N8]

(M70208A0) リフトシリンダ(フロント)

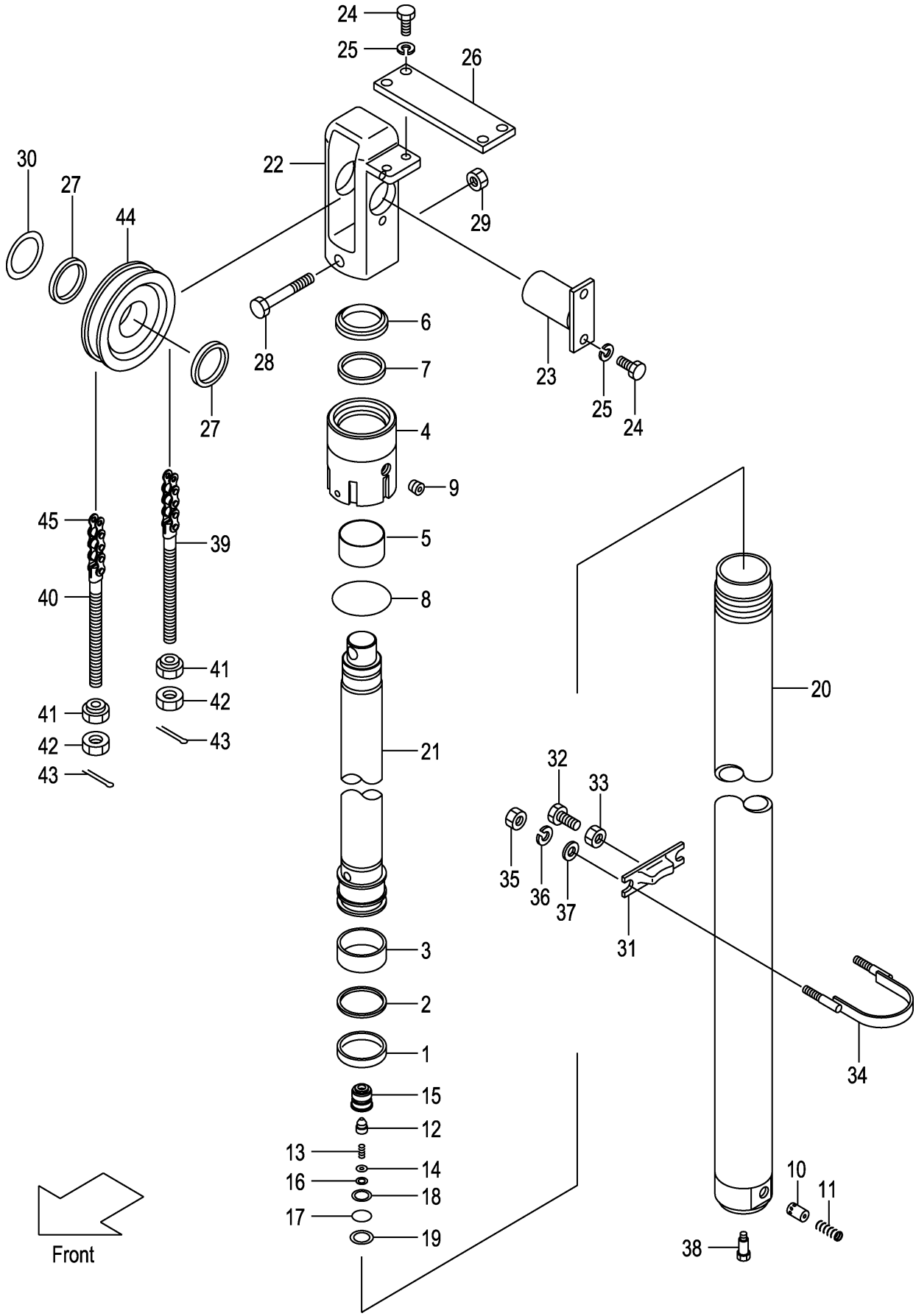

A:VFHM2N8(3T)

Item No	Part No.	Mark	Description		Req'd	Remarks : Serial No.
A1	22N80-50201		CYL-ASSY,LIFT VFHM435	ﾘﾌﾄｼﾘﾝﾀﾞｱｯｾﾝ	2	INC.1-21
-	22N80-50221		CYL-ASSY,LIFT VFHM480	ﾘﾌﾄｼﾘﾝﾀﾞｱｯｾﾝ	2	INC.1-21
-	22N80-50231		CYL-ASSY,LIFT VFHM500	ﾘﾌﾄｼﾘﾝﾀﾞｱｯｾﾝ	2	INC.1-21
-	22N80-50261		CYL-ASSY,LIFT VFHM540	ﾘﾌﾄｼﾘﾝﾀﾞｱｯｾﾝ	2	INC.1-21
-	22N80-80261		CYL-ASSY,LIFT VFHM550	ﾘﾌﾄｼﾘﾝﾀﾞｱｯｾﾝ	2	INC.1-21
1	23460-53161		PACKING	ﾊﾟｯｷﾝｸﾞ	2	
2	22658-52301		RING,BACK-UP	ﾘﾝｸﾞ	2	
3	23460-53181		WEARING	ｳｪｱﾘﾝｸﾞ	2	
4	214T8-43011		CAP	ｷｬｯﾌﾟ	2	
5	24629-44201		BUSHING	ﾌﾞｯｼﾝｸﾞ	2	
6	224T8-46001		SEAL,DUST	ｼｰﾙ	2	
7	224T8-46011		PACKING	ﾊﾟｯｷﾝｸﾞ	2	
8	03340-00090		O-RING	Oﾘﾝｸﾞ	2	
9	24329-45541		PLUG	ﾌﾟﾗｸﾞ	4	
10	24320-55001		PISTON	ﾋﾟｽﾄﾝ	2	
11	27978-42601		SPRING	ｽﾌﾟﾘﾝｸﾞ	2	
A2	214T0-83501		VALVE-ASSY,CHECK	ﾁｪｯｸﾊﾞﾙﾌﾞｱｯｾﾝ	2	INC.12-16
12	214T0-83521		POPPET	ﾎﾟﾍﾟｯﾄ	2	
13	214T0-83541		SPRING	ｽﾌﾟﾘﾝｸﾞ	2	
14	214T0-83531		PLATE	ﾌﾟﾚｰﾄ	2	
15	214T0-83511		CASE	ｹｰｽ	2	
16	02110-00014		RING,SNAP	ｽﾅｯﾌﾟﾘﾝｸﾞ	2	
17	03320-00210		O-RING	Oﾘﾝｸﾞ	2	
18	03360-00210		RING,BACK-UP	ﾘﾝｸﾞ	2	
19	02110-00028		RING,SNAP	ｽﾅｯﾌﾟﾘﾝｸﾞ	2	
20	22N80-50601		BODY,CYL VFHM435	ﾎﾞﾃﾞｨ	2	
-	22N80-50621		BODY,CYL VFHM480	ﾎﾞﾃﾞｨ	2	
-	22N80-50631		BODY,CYL VFHM500	ﾎﾞﾃﾞｨ	2	
-	22N80-50661		BODY,CYL VFHM540	ﾎﾞﾃﾞｨ	2	
-	22N80-80661		BODY,CYL VFHM550	ﾎﾞﾃﾞｨ	2	
21	22N80-50401		ROD,PISTON VFHM435	ﾛｯﾄﾞ	2	
-	22N80-50421		ROD,PISTON VFHM480	ﾛｯﾄﾞ	2	
-	22N80-50431		ROD,PISTON VFHM500	ﾛｯﾄﾞ	2	
-	22N80-50461		ROD,PISTON VFHM540	ﾛｯﾄﾞ	2	
-	22N80-80461		ROD,PISTON VFHM550	ﾛｯﾄﾞ	2	
22	22N80-52601		HEAD,PISTON	ﾍｯﾄﾞ	2	
23	22N40-74501		PIN	ﾋﾟﾝ	2	
24	01103-10020		BOLT	ﾎﾞﾙﾄ	8	
25	02011-00010		WASHER	ﾜｯｼｬ	8	
26	22N40-74311		PLATE	ﾌﾟﾚｰﾄ	1	
27	229G0-52251		SPACER	ｽﾍﾟｰｻ	4	
28	01100-12080		BOLT	ﾎﾞﾙﾄ	2	
29	01402-00012		NUT	ﾅｯﾄ	2	
30	224T8-52291		SHIM	ｼﾑ	2	
31	224T8-42711		SUPPORT,CYL	ｻﾎﾟｰﾄ	2	
32	01120-16040		BOLT	ﾎﾞﾙﾄ	2	
33	01402-00016		NUT	ﾅｯﾄ	2	
34	224T8-42701		U-BOLT	Uﾎﾞﾙﾄ	2	
35	01400-00010		NUT	ﾅｯﾄ	4	
36	02010-00010		WASHER	ﾜｯｼｬ	4	

FIG.179 LIFT CYLINDER (FRONT) [VFHM2N8]

(M70208A0) リフトシリンダ(フロント)

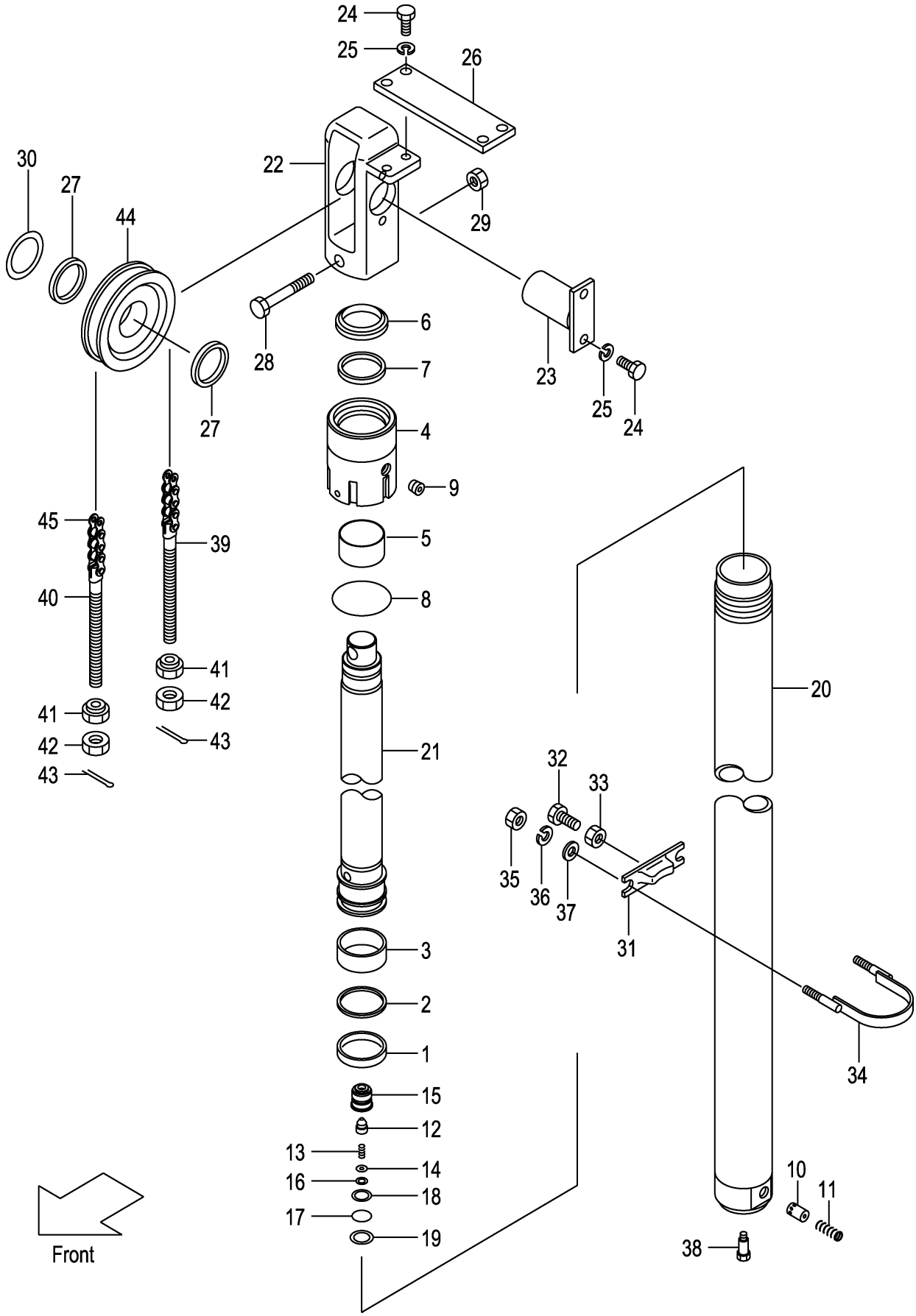

A:VFHM2N8(3T)

Item No	Part No.	Mark	Description		Req'd	Remarks : Serial No.
37	02000-00010		WASHER	ﾜｯｼｬ	4	
38	214A8-42661		BOLT	ﾎﾞﾙﾄ	2	
39	24459-42391		PIN,ANCHOR	ﾋﾟﾝ	2	
40	24459-42381		PIN,ANCHOR	ﾋﾟﾝ	2	
41	22218-40191		NUT	ﾅｯﾄ	4	
42	01400-00018		NUT	ﾅｯﾄ	4	
43	02200-03030		PIN	ﾋﾟﾝ	4	
44	277P0-83001		SHEAVE	ｼｰﾌﾞ	2	
45	22438-45571		CHAIN VFHM435	ﾁｪｰﾝ	2	
-	22438-45631		CHAIN VFHM480	ﾁｪｰﾝ	2	
-	22438-45671		CHAIN VFHM500	ﾁｪｰﾝ	2	
-	22438-45731		CHAIN VFHM540	ﾁｪｰﾝ	2	
-	22438-45731		CHAIN VFHM550	ﾁｪｰﾝ	2	

M E M O

M E M O

FIG.180 LIFT CYLINDER (REAR) [VFHM2N8]

(M70208B0) リフトシリンダ(リヤー)

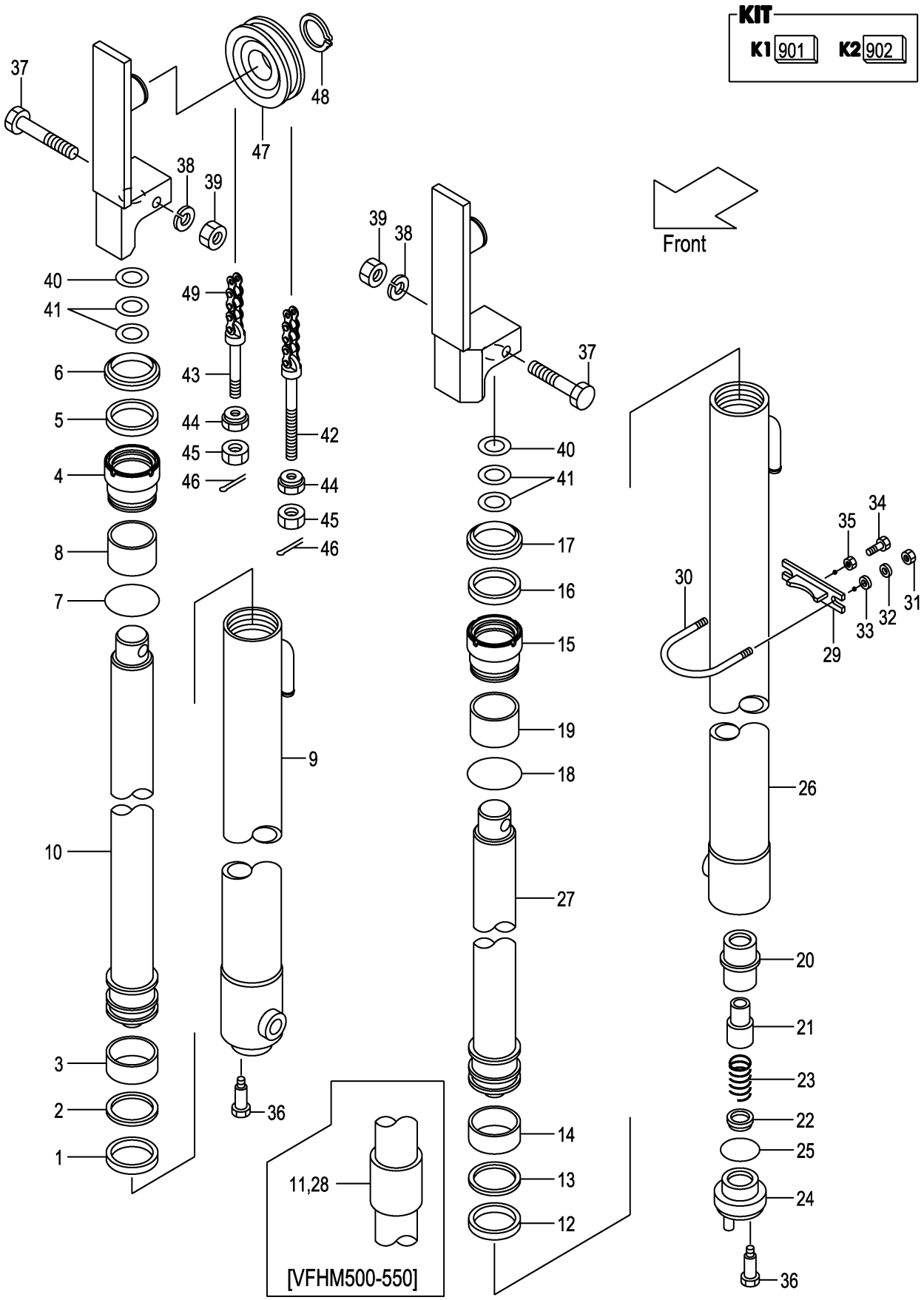

A:VFHM2N8(3T)

Item No	Part No.	Mark	Description		Req'd	Remarks : Serial No.
A1	277T0-81602		CYL-ASSY,LIFT,RH VFHM435		1	INC.1-10
				ﾘﾌﾄｼﾘﾝﾀﾞｱｯｾﾝ		
-	277T0-81632		CYL-ASSY,LIFT,RH VFHM480		1	INC.1-10
				ﾘﾌﾄｼﾘﾝﾀﾞｱｯｾﾝ		
-	277T0-81642		CYL-ASSY,LIFT,RH VFHM500		1	INC.1-11
				ﾘﾌﾄｼﾘﾝﾀﾞｱｯｾﾝ		
-	277T0-81652		CYL-ASSY,LIFT,RH VFHM540		1	INC.1-11
				ﾘﾌﾄｼﾘﾝﾀﾞｱｯｾﾝ		
-	277T0-81662		CYL-ASSY,LIFT,RH VFHM550		1	INC.1-11
				ﾘﾌﾄｼﾘﾝﾀﾞｱｯｾﾝ		
901	232L8-49801	K1	KIT,OVERHAUL RH	ｵｰﾊﾞﾎｰﾙｷｯﾄ	1	INC.1-3,5-7
1	27978-42411	*	PACKING	ﾊﾟｯｷﾝｸﾞ	1	
2	24459-42291	*	RING,BACK-UP	ﾘﾝｸﾞ	1	
3	27978-42421	*	WEARING	ｳｪｱﾘﾝｸﾞ	1	
4	232L8-42601		CAP,CYL	ｷｬｯﾌﾟ	1	
5	214J8-42721	*	PACKING	ﾊﾟｯｷﾝｸﾞ	1	
6	214J8-46001	*	SEAL,DUST	ｼｰﾙ	1	
7	232L8-42631	*	O-RING	Oﾘﾝｸﾞ	1	
8	232L8-42621		BUSHING	ﾌﾞｯｼﾝｸﾞ	1	
9	277T0-81002		BODY,CYL,RH VFHM435	ﾎﾞﾃﾞｨ	1	
-	277T0-81032		BODY,CYL,RH VFHM480	ﾎﾞﾃﾞｨ	1	
-	277T0-81042		BODY,CYL,RH VFHM500	ﾎﾞﾃﾞｨ	1	
-	277T0-81052		BODY,CYL,RH VFHM540	ﾎﾞﾃﾞｨ	1	
-	277T0-81062		BODY,CYL,RH VFHM550	ﾎﾞﾃﾞｨ	1	
10	277T0-81401		ROD,PISTON VFHM435	ﾛｯﾄﾞ	1	
-	277T0-81431		ROD,PISTON VFHM480	ﾛｯﾄﾞ	1	
-	277T0-81441		ROD,PISTON VFHM500	ﾛｯﾄﾞ	1	
-	277T0-81451		ROD,PISTON VFHM540	ﾛｯﾄﾞ	1	
-	277T0-81461		ROD,PISTON VFHM550	ﾛｯﾄﾞ	1	
11	27978-42371		SPACER VFHM500	ｽﾍﾟｰｻ	1	
-	27980-82701		SPACER VFHM540	ｽﾍﾟｰｻ	1	
-	27978-42371		SPACER VFHM550	ｽﾍﾟｰｻ	1	
A2	277T0-81802		CYL-ASSY,LIFT,LH VFHM435		1	INC.12-27
				ﾘﾌﾄｼﾘﾝﾀﾞｱｯｾﾝ		
-	277T0-81832		CYL-ASSY,LIFT,LH VFHM480		1	INC.12-27
				ﾘﾌﾄｼﾘﾝﾀﾞｱｯｾﾝ		
-	277T0-81842		CYL-ASSY,LIFT,LH VFHM500		1	INC.12-28
				ﾘﾌﾄｼﾘﾝﾀﾞｱｯｾﾝ		
-	277T0-81852		CYL-ASSY,LIFT,LH VFHM540		1	INC.12-28
				ﾘﾌﾄｼﾘﾝﾀﾞｱｯｾﾝ		
-	277T0-81862		CYL-ASSY,LIFT,LH VFHM550		1	INC.12-28
				ﾘﾌﾄｼﾘﾝﾀﾞｱｯｾﾝ		
902	232L8-49801	K2	KIT,OVERHAUL LH	ｵｰﾊﾞﾎｰﾙｷｯﾄ	1	INC.12-14,16-18
12	27978-42411	*	PACKING	ﾊﾟｯｷﾝｸﾞ	1	
13	24459-42291	*	RING,BACK-UP	ﾘﾝｸﾞ	1	
14	27978-42421	*	WEARING	ｳｪｱﾘﾝｸﾞ	1	
15	232L8-42601		CAP,CYL	ｷｬｯﾌﾟ	1	
16	214J8-42721	*	PACKING	ﾊﾟｯｷﾝｸﾞ	1	
17	214J8-46001	*	SEAL,DUST	ｼｰﾙ	1	
18	232L8-42631	*	O-RING	Oﾘﾝｸﾞ	1	

FIG.180 LIFT CYLINDER (REAR) [VFHM2N8]

(M70208B0) リフトシリンダ(リヤー)

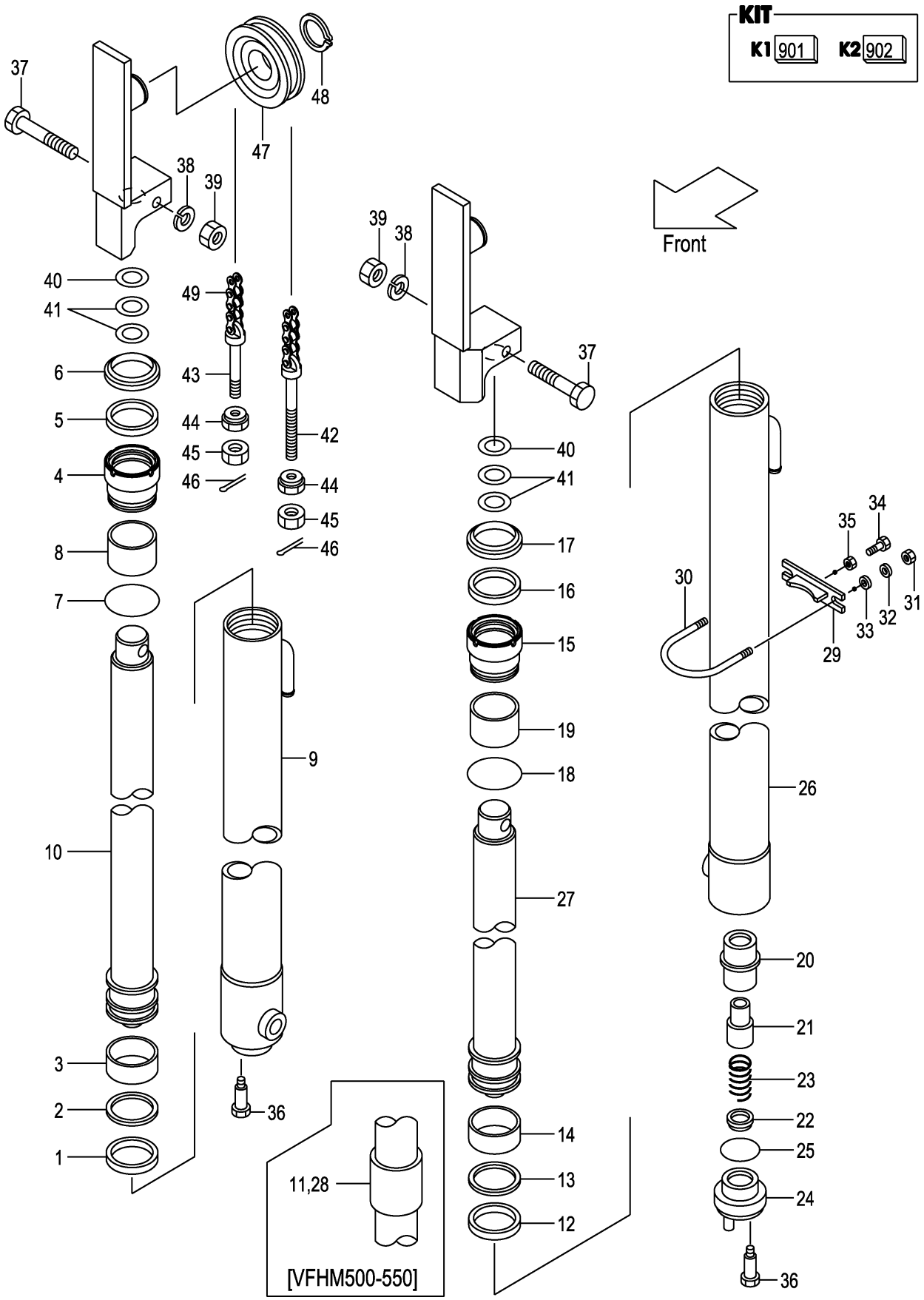

A:VFHM2N8(3T)

Item No	Part No.	Mark	Description		Req'd	Remarks : Serial No.
19	232L8-42621		BUSHING	ﾌﾞｯｼﾝｸﾞ	1	
20	53658-43021		SLEEVE	ｽﾘｰﾌﾞ	1	
21	53658-43011		PISTON	ﾋﾟｽﾄﾝ	1	
22	53658-43001		VALVE,CHECK	ﾊﾞﾙﾌﾞ	1	
23	53658-43031		SPRING	ｽﾌﾟﾘﾝｸﾞ	1	
24	53658-43041		PLUG	ﾌﾟﾗｸﾞ	1	
25	03320-00340		O-RING	Oﾘﾝｸﾞ	1	
26	277T0-81202		BODY,CYL,LH VFHM435	ﾎﾞﾃﾞｨ	1	
-	277T0-81232		BODY,CYL,LH VFHM480	ﾎﾞﾃﾞｨ	1	
-	277T0-81242		BODY,CYL,LH VFHM500	ﾎﾞﾃﾞｨ	1	
-	277T0-81252		BODY,CYL,LH VFHM540	ﾎﾞﾃﾞｨ	1	
-	277T0-81262		BODY,CYL,LH VFHM550	ﾎﾞﾃﾞｨ	1	
27	277T0-81401		ROD,PISTON VFHM435	ﾛｯﾄﾞ	1	
-	277T0-81431		ROD,PISTON VFHM480	ﾛｯﾄﾞ	1	
-	277T0-81441		ROD,PISTON VFHM500	ﾛｯﾄﾞ	1	
-	277T0-81451		ROD,PISTON VFHM540	ﾛｯﾄﾞ	1	
-	277T0-81461		ROD,PISTON VFHM550	ﾛｯﾄﾞ	1	
28	27978-42371		SPACER VFHM500	ｽﾍﾟｰｻ	1	
-	27980-82701		SPACER VFHM540	ｽﾍﾟｰｻ	1	
-	27978-42371		SPACER VFHM550	ｽﾍﾟｰｻ	1	
29	22N58-43011		SUPPORT,CYL	ｻﾎﾟｰﾄ	2	
30	234A8-42551		U-BOLT	Uﾎﾞﾙﾄ	2	
31	01400-00010		NUT	ﾅｯﾄ	4	
32	02010-20010		WASHER	ﾜｯｼｬ	4	
33	02000-20010		WASHER	ﾜｯｼｬ	4	
34	01120-12040		BOLT	ﾎﾞﾙﾄ	2	
35	01402-00012		NUT	ﾅｯﾄ	2	
36	214A8-42661		BOLT	ﾎﾞﾙﾄ	2	
37	01100-12070		BOLT	ﾎﾞﾙﾄ	2	
38	02010-00012		WASHER	ﾜｯｼｬ	2	
39	01400-00012		NUT	ﾅｯﾄ	2	
40	23917-42191		SHIM,T-1.0	ｼﾑ	10	
41	22679-43831		SHIM,T-0.2	ｼﾑ	10	
42	24459-42391		PIN,ANCHOR	ﾋﾟﾝ	2	
43	215K0-82701		PIN,ANCHOR	ﾋﾟﾝ	2	
44	22218-40191		NUT	ﾅｯﾄ	4	
45	01400-00018		NUT	ﾅｯﾄ	4	
46	02200-03030		PIN,COTTER	ﾋﾟﾝ	4	
47	234A8-43501		SHEAVE	ｼｰﾌﾞ	2	
48	02100-00040		RING,SNAP	ｽﾅｯﾌﾟﾘﾝｸﾞ	2	
49	22438-45771		CHAIN,LEAF VFHM435	ﾁｪｰﾝ	2	
-	22438-45831		CHAIN,LEAF VFHM480	ﾁｪｰﾝ	2	
-	22438-45871		CHAIN,LEAF VFHM500	ﾁｪｰﾝ	2	
-	22438-45931		CHAIN,LEAF VFHM540	ﾁｪｰﾝ	2	
-	22438-45931		CHAIN,LEAF VFHM550	ﾁｪｰﾝ	2	

M E M O

M E M O

FIG.181 MAST PIPING [VFHM2N8]

(M70208C0) マストパイピング

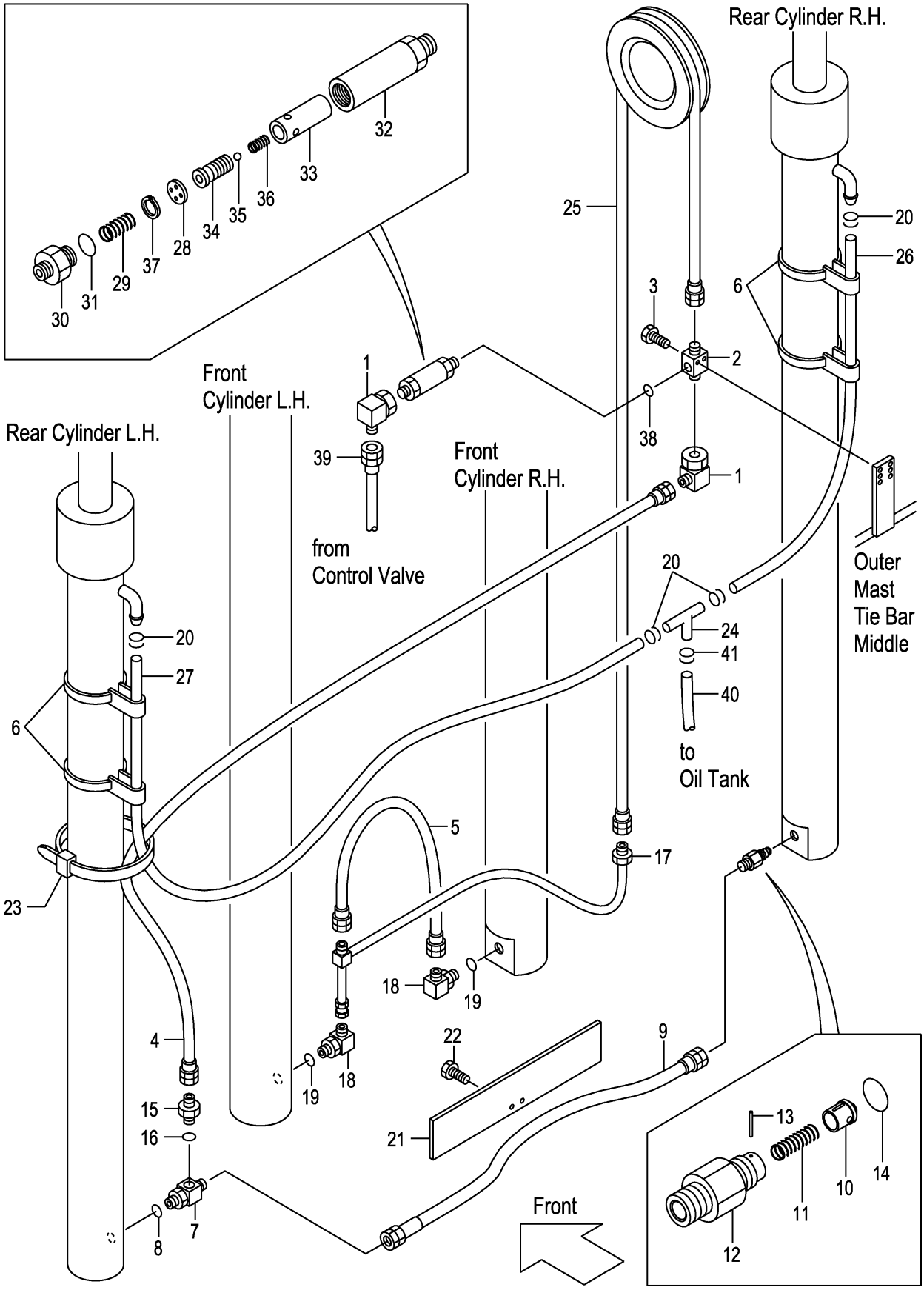

A:VFHM2N8(3T)

Item No	Part No.	Mark	Description		Req'd	Remarks : Serial No.
1	62150-14321		ELBOW	ｴﾙﾎﾞ	2	
2	229F0-94101		THREE-WAY	ｽﾘｰｳｪｲ	1	
3	01184-10040		BOLT	ﾎﾞﾙﾄ	2	
4	22N40-82221		HOSE	ﾎｰｽ	1	
5	22N40-82201		HOSE	ﾎｰｽ	1	
6	22N58-45001		BAND	ﾊﾞﾝﾄﾞ	2	
A1	216G0-93101		THREE-WAY-ASSY	ｽﾘｰｳｪｲｱｯｾﾝ	1	INC.7,8
7	NO PART NO.	#	THREE-WAY	ｽﾘｰｳｪｲ	1	
8	03320-00140		O-RING	Oﾘﾝｸﾞ	1	
9	22N50-92101		HOSE	ﾎｰｽ	1	
A2	234A8-40701		VALVE-ASSY,CUT	ｶｯﾄﾊﾞﾙﾌﾞｱｯｾﾝ	1	INC.10-14
10	234A8-42602		PISTON	ﾋﾟｽﾄﾝ	1	
11	234A8-42611		SPRING	ｽﾌﾟﾘﾝｸﾞ	1	
12	234A8-42622		NIPPLE	ﾆｯﾌﾟﾙ	1	
13	02270-01014		PIN	ﾋﾟﾝ	1	
14	03320-00140		O-RING	Oﾘﾝｸﾞ	1	
A3	04134-20404		NIPPLE-ASSY	ﾆｯﾌﾟﾙｱｯｾﾝ	1	INC.15,16
15	NO PART NO.	#	NIPPLE	ﾆｯﾌﾟﾙ	1	
16	03320-00180		O-RING	Oﾘﾝｸﾞ	1	
17	22N40-81001		PIPE	ﾊﾟｲﾌﾟ	1	
A4	22N40-81091		ELBOW-ASSY	ｴﾙﾎﾞｱｯｾﾝ	2	INC.18,19
18	NO PART NO.	#	ELBOW	ｴﾙﾎﾞ	2	
19	03320-00180		O-RING	Oﾘﾝｸﾞ	2	
20	24329-46201		CLIP	ｸﾘｯﾌﾟ	4	
21	22N40-82251		PLATE	ﾌﾟﾚｰﾄ	1	
22	01183-08016		BOLT	ﾎﾞﾙﾄ	2	
23	25790-94021		BAND,HOSE	ﾊﾞﾝﾄﾞ	3	
24	53675-55051		THREE-WAY	ｽﾘｰｳｪｲ	1	
25	04601-44294		HOSE,SYN VFHM435	ﾎｰｽ	1	
-	04601-44323		HOSE,SYN VFHM480	ﾎｰｽ	1	
-	04601-44343		HOSE,SYN VFHM500	ﾎｰｽ	1	
-	04601-44367		HOSE,SYN VFHM540	ﾎｰｽ	1	
-	04601-44375		HOSE,SYN VFHM550	ﾎｰｽ	1	
26	04710-04160		TUBE,RH VFHM435	ﾁｭｰﾌﾞ	1	
-	04710-04175		TUBE,RH VFHM480	ﾁｭｰﾌﾞ	1	
-	04710-04185		TUBE,RH VFHM500	ﾁｭｰﾌﾞ	1	
-	04710-04200		TUBE,RH VFHM540	ﾁｭｰﾌﾞ	1	
-	04710-04205		TUBE,RH VFHM550	ﾁｭｰﾌﾞ	1	
27	04710-04165		TUBE,LH VFHM435	ﾁｭｰﾌﾞ	1	
-	04710-04180		TUBE,LH VFHM480	ﾁｭｰﾌﾞ	1	
-	04710-04190		TUBE,LH VFHM500	ﾁｭｰﾌﾞ	1	
-	04710-04205		TUBE,LH VFHM540	ﾁｭｰﾌﾞ	1	
-	04710-04210		TUBE,LH VFHM550	ﾁｭｰﾌﾞ	1	
A5	234A8-41001		REGULATOR-ASSY,FLOW	ﾌﾛｰﾚｷﾞｭﾚｰﾀｱｯｾﾝ	1	INC.28-37
28	NO PART NO.	#	PLATE	ﾌﾟﾚｰﾄ	1	
29	27979-43101		SPRING	ｽﾌﾟﾘﾝｸﾞ	1	
30	NO PART NO.	#	NIPPLE	ﾆｯﾌﾟﾙ	1	
31	03300-00280		O-RING	Oﾘﾝｸﾞ	1	
32	NO PART NO.	#	CASE	ｹｰｽ	1	
33	NO PART NO.	#	SLEEVE	ｽﾘｰﾌﾞ	1	

FIG.181 MAST PIPING [VFHM2N8]

(M70208C0) マストパイピング

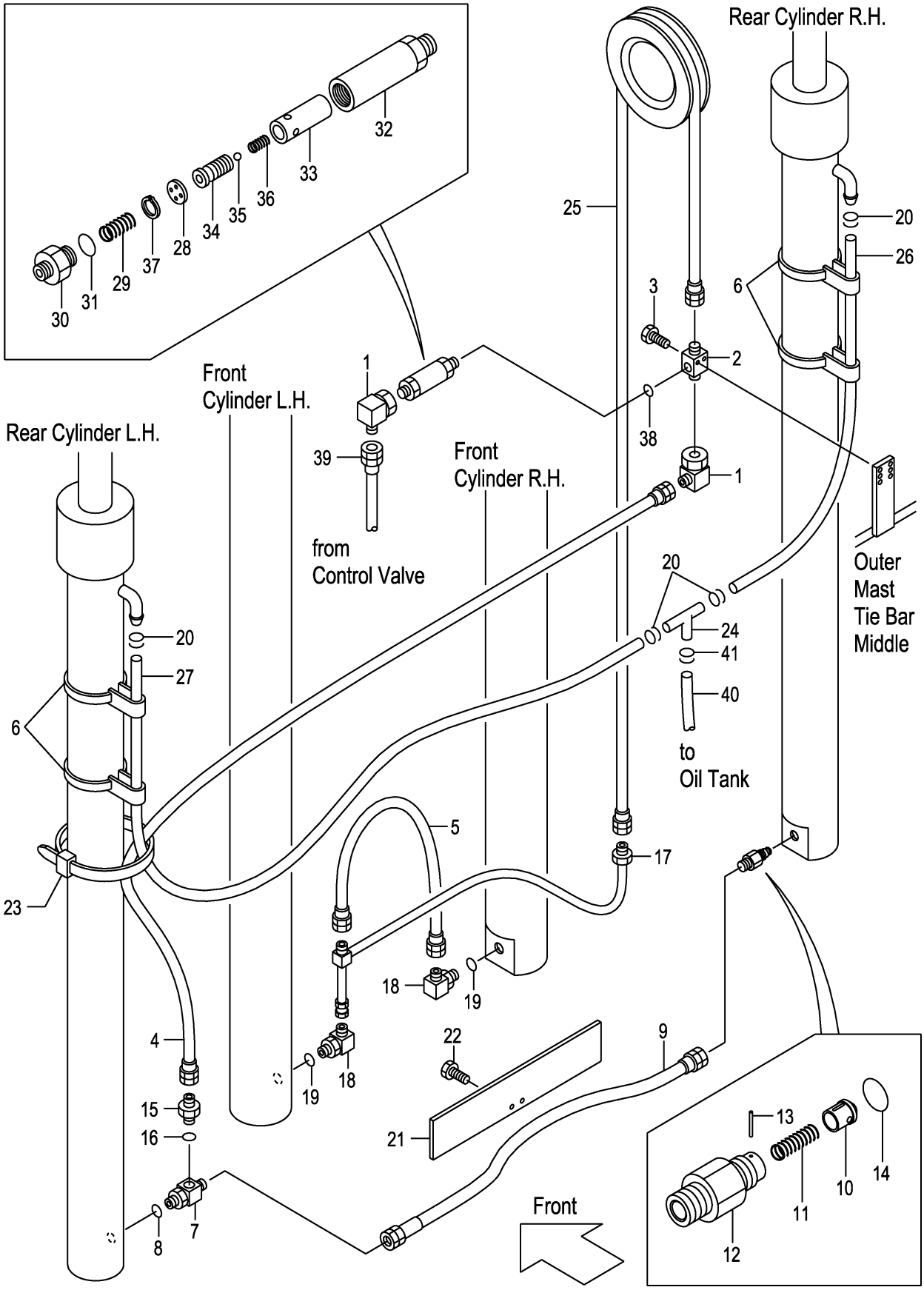

A:VFHM2N8(3T)

Item No	Part No.	Mark	Description		Req'd	Remarks : Serial No.
34	NO PART NO.	#	PISTON	ﾋﾟｽﾄﾝ	1	
35	24459-42951		BALL,NYLON	ﾎﾞｰﾙ	1	
36	214A8-44151		SPRING	ｽﾌﾟﾘﾝｸﾞ	1	
37	02110-00018		RING,SNAP	ｽﾅｯﾌﾟﾘﾝｸﾞ	1	
38	03320-00180		O-RING	Oﾘﾝｸﾞ	1	
39	22N40-82801		HOSE	ﾎｰｽ	1	
40	04710-04150		HOSE	ﾎｰｽ	1	
41	24329-46201		CLIP	ｸﾘｯﾌﾟ	2	

PARTS NUMBER INDEX

Part No.	Fig.No.	Part No.	Fig.No.	Part No.	Fig.No.	Part No.	Fig.No.
B-B6111-45075	173	B-B6727-04702	164	B-30131-65012	172	B-6567-12102	157
B-B6111-45078	157	B-B6727-04801	164	B-30141-91048	157	B-6567-12201	157
B-B6111-45079	173	B-B6727-04802	164	B-30161-55046	157	B-6567-12202	157
B-B6111-45080	173	B-B6727-04901	164	B-30161-55046	173	B-6567-12301	157
B-B6111-45080	173	B-B6727-04902	164	B-30161-91775	157	B-6567-12302	157
B-B6111-45081	173	B-B6727-05001	164	B-30161-91775	173	B-6567-12401	157
B-B6121-85007	164	B-B6727-05002	164	B-30181-85002	164	B-6567-12402	157
B-B6121-85007	172	B-B6727-05101	164	B-30181-85002	172	B-6567-12501	157
B-B6521-90004	164	B-B6727-05102	164	B-30191-45025	157	B-6567-12502	157
B-B6521-90004	172	B-B6727-05201	164	B-30191-45025	173	B-6567-12601	157
B-B6551-91018	157	B-B6727-05202	164	B-30191-65050	164	B-6567-12602	157
B-B6567-14601	173	B-B6727-05301	164	B-30191-65050	172	B-6567-12701	157
B-B6567-14602	173	B-B6727-05302	164	B-30296-72103	157	B-6567-12702	157
B-B6567-14701	173	B-B6727-05401	164	B-30461-55039	157	B-6567-12801	157
B-B6567-14702	173	B-B6727-05402	164	B-30461-55039	173	B-6567-12802	157
B-B6567-14801	173	B-B6727-05501	164	B-3055A-00058	157	B-6567-12901	157
B-B6567-14802	173	B-B6727-05502	164	B-3055A-00058	173	B-6567-12902	157
B-B6567-14901	173	B-B6727-05601	164	B-3055B-00097	157	B-6567-13001	157
B-B6567-14902	173	B-B6727-05602	164	B-3055B-00097	173	B-6567-13002	157
B-B6567-15001	173	B-B6727-05701	164	B-30656-55008	173	B-6567-13101	157
B-B6567-15002	173	B-B6727-05702	164	B-30961-04512	157	B-6567-13102	157
B-B6567-15101	173	B-B6727-05801	164	B-30961-04512	173	B-6567-13201	157
B-B6567-15102	173	B-B6727-05802	164	B-30961-65013	164	B-6567-13202	157
B-B6567-15201	173	B-B6727-05901	164	B-30961-65013	172	B-6567-13301	157
B-B6567-15202	173	B-B6727-05902	164	B-402-00704-13	132	B-6567-13302	157
B-B6567-15301	173	B-B6727-06001	164	B-402-00704-13	133	B-6567-13401	157
B-B6567-15302	173	B-B6727-06002	164	B-402-00704-13	134	B-6567-13402	157
B-B6567-15401	173	B-B6727-18101	164	B-402-00704-13	135	B-6567-13501	157
B-B6567-15402	173	B-B6727-18102	164	B-402-30905-02	132	B-6567-13502	157
B-B6567-15501	173	B-B6727-18201	164	B-402-30905-03	133	B-6567-13601	157
B-B6567-15502	173	B-B6727-18202	164	B-402-30905-04	134	B-6567-13602	157
B-B6567-15601	173	B-B6727-18301	164	B-402-30905-05	135	B-6567-13701	157
B-B6567-15602	173	B-B6727-18302	164	B-402-36066	132	B-6567-13702	157
B-B6711-00001	164	B-B6727-18401	164	B-402-36066	133	B-6567-13801	157
B-B6711-00001	172	B-B6727-18402	164	B-402-36066	134	B-6567-13802	157
B-B6717-89101	172	B-B685A-00007	164	B-402-36066	135	B-6567-13901	157
B-B6717-89102	172	B-B685A-00007	172	B-402-36067	132	B-6567-13902	157
B-B6717-89201	172	B-B685B-00005	164	B-402-36067	133	B-94721-22101	164
B-B6717-89202	172	B-B685B-00005	172	B-402-36067	134	B-94721-22101	172
B-B6717-89301	172	B-B6983-85007	164	B-402-36067	135	B-95123-08000	164
B-B6717-89302	172	B-B6983-85007	172	B-402-36151	132	B-95123-08000	172
B-B6717-89401	172	B-C4300-22001	164	B-402-36151	133	B-95151-04500	173
B-B6717-89402	172	B-C4300-22001	172	B-402-36151	134	B-95151-08500	164
B-B6717-89501	172	B-023-06632-41	132	B-402-36151	135	B-95151-08500	172
B-B6717-89502	172	B-023-06632-41	133	B-402-36603	132	BK-7341006000	60
B-B6717-89601	172	B-023-06632-41	134	B-402-36603	133	BK-8059061000	60
B-B6717-89602	172	B-023-06632-41	135	B-402-36603	134	BK-8104209010	60
B-B6717-89701	172	B-026-50103	132	B-402-36603	135	BK-81431A4700	60
B-B6717-89702	172	B-026-50103	133	B-402-36924	133	C-K2-11242-52000	70
B-B6717-89801	172	B-026-50103	134	B-402-36924	134	C-11452-2N0-C	149
B-B6717-89802	172	B-026-50103	135	B-402-36924	135	C-11452-2N0-C	151
B-B6717-89901	172	B-26570-30125	164	B-402-37128	132	C-11452-2N0-E	149
B-B6717-89902	172	B-26570-30125	172	B-402-37128	133	C-11452-2N0-E	151
B-B6717-90001	172	B-30121-55043	157	B-402-37128	134	C-11452-2N5-D	149
B-B6717-90002	172	B-30121-55043	173	B-402-37128	135	C-11452-2N5-D	150
B-B6717-90101	172	B-30131-45017	157	B-402-37129	132	C-51-B2101-02322	70
B-B6717-90102	172	B-30131-45017	173	B-402-37129	133	C-52-10901-64550	70
B-B6727-04601	164	B-30131-55018	157	B-402-37129	134	C-52-10901-64560	70
B-B6727-04602	164	B-30131-55018	173	B-402-37129	135	C-52-11204-69010	70
B-B6727-04701	164	B-30131-65012	164	B-6567-12101	157	C-52-11207-02380	70

PARTS NUMBER INDEX

Part No.	Fig.No.	Part No.	Fig.No.	Part No.	Fig.No.	Part No.	Fig.No.
C-52-11211-14530	70	01100-08020	36	01103-10030	63	01183-08012	55
C-52-11211-24530	70	01100-08020	36	01103-10030	63	01183-08012	126
C-52-11218-14502	70	01100-08020	48	01103-10035	45	01183-08012	127
C-52-11218-15152	70	01100-08020	49	01103-10040	57	01183-08012	137
C-52-11218-15161	70	01100-08020	59	01103-10040	63	01183-08012	138
C-52-11218-24502	70	01100-08025	38	01103-10045	154	01183-08012	139
C-52-11218-25152	70	01100-08025	55	01103-10045	160	01183-08012	140
C-52-11218-25161	70	01100-08025	99	01103-10045	168	01183-08016	2
C-52-11227-05094	70	01100-08030	11	01103-10045	176	01183-08016	10
C-52-11232-54540	70	01100-10025	101	01103-10060	63	01183-08016	21
C-52-11239-51270	70	01100-10025	102	01103-10065	59	01183-08016	22
C-52-11239-54011	70	01100-10025	103	01103-12025	1	01183-08016	39
C-52-11239-54071	70	01100-10030	102	01103-12030	1	01183-08016	39
C-52-11249-54010	70	01100-10030	104	01103-14040	157	01183-08016	56
C-52-11249-55310	70	01100-10040	53	01103-14040	165	01183-08016	101
C-52-13117-02350	70	01100-10040	100	01103-14040	173	01183-08016	102
C-52-13117-11000-S	70	01100-10055	54	01103-16065	156	01183-08016	119
C-52-13117-13300-P	70	01100-12020	96	01103-16065	162	01183-08016	181
C-52-13117-21000-S	70	01100-12070	180	01103-16065	170	01183-08025	145
C-52-13117-23300-P	70	01100-12080	179	01103-16065	178	01184-10012	174
C-52-13117-52000	70	01100-14025	155	01106-10030	69	01184-10016	57
C-52-13117-53000-Z	70	01100-14025	161	01106-10035	69	01184-10020	165
C-52-13117-83010-Z	70	01100-14025	161	01106-10045	69	01184-10025	53
C-52-13117-83020-Z	70	01100-14025	161	01106-10060	69	01184-10025	54
C-52-13124-24600-S	70	01100-14025	161	01106-12040	64	01184-10025	111
C-52-30780-02340	70	01100-14025	169	01109-12025	118	01184-10025	178
C-52-51302-53840	70	01100-14025	169	01110-10025	72	01184-10030	53
C-52-51308-54160	70	01100-14025	169	01110-36200	116	01184-10030	54
C-52-51342-54110	70	01100-14025	169	01110-36200	117	01184-10030	103
C-90-2300-1201	70	01100-14025	169	01113-10035	72	01184-10030	104
C-90-9200-0800	70	01100-14025	177	01113-30370	117	01184-10030	104
R-402-00710-12	131	01100-14030	155	01120-10040	102	01184-10040	174
R-402-65004-41	131	01100-14030	161	01120-12040	157	01184-10040	181
R-403-21988	131	01100-14030	161	01120-12040	180	01184-10050	111
W-K3PK-M	153	01100-14030	161	01120-16040	179	01184-12025	154
W-K3PK-M	159	01100-14030	169	01123-10045	57	01184-12025	160
W-K3PK-M	167	01100-14030	169	01141-06012	74	01184-12025	163
W-K3PK-M	175	01100-14030	169	01170-05045	63	01184-12025	163
Z-8-94132-674-0	10	01100-14030	169	01171-06025	94	01184-12025	163
Z-8-94132-675-0	10	01100-14030	177	01181-08016	120	01184-12025	168
Z-8-94367-294-0	10	01100-14035	161	01181-08016	120	01184-12025	171
Z-8-94367-956-0	10	01100-14035	169	01181-08025	12	01184-12025	176
Z-8-94367-957-0	10	01100-16020	118	01183-06010	19	01184-12030	107
01030-04014	40	01100-16040	93	01183-06010	20	01185-04010	74
01030-04020	46	01100-16045	75	01183-06010	103	01185-04012	14
01030-05055	25	01100-16050	178	01183-06010	104	01185-06016	19
01030-05055	26	01100-16060	170	01183-06012	100	01185-06016	20
01030-06010	74	01100-16075	164	01183-06012	137	01185-08015	128
01031-06065	98	01100-16075	172	01183-06012	138	01185-08016	3
01033-05014	17	01103-08016	53	01183-06012	139	01185-08016	4
01033-05014	18	01103-08016	56	01183-06012	140	01185-08016	5
01033-06012	55	01103-08016	69	01183-06016	21	01185-08016	6
01043-03010	14	01103-08016	74	01183-06016	22	01185-08016	19
01044-04014	40	01103-08020	57	01183-06016	166	01185-08016	20
01066-08008	62	01103-08030	63	01183-06016	166	01185-08016	23
01066-10012	147	01103-08040	63	01183-06020	163	01185-08016	29
01066-10012	147	01103-10018	164	01183-06020	163	01185-08016	30
01100-04012	14	01103-10018	172	01183-06020	163	01185-08016	30
01100-06020	46	01103-10020	179	01183-06020	171	01185-08016	31
01100-08020	36	01103-10030	59	01183-08012	39	01185-08016	31

PARTS NUMBER INDEX

Part No.	Fig.No.	Part No.	Fig.No.	Part No.	Fig.No.	Part No.	Fig.No.
01185-08016	32	01400-00008	129	02000-00006	99	02010-00010	13
01185-08016	32	01400-00008	130	02000-00006	100	02010-00010	53
01185-08016	33	01400-00010	54	02000-00006	100	02010-00010	54
01185-08016	38	01400-00010	57	02000-00006	102	02010-00010	74
01185-08016	39	01400-00010	74	02000-00006	121	02010-00010	104
01185-08016	59	01400-00010	77	02000-00008	12	02010-00010	131
01185-08016	74	01400-00010	100	02000-00008	74	02010-00010	179
01185-08016	99	01400-00010	103	02000-00008	103	02010-00012	93
01185-08016	100	01400-00010	104	02000-00008	104	02010-00012	96
01185-08016	103	01400-00010	157	02000-00008	119	02010-00012	180
01185-08016	104	01400-00010	179	02000-00008	120	02010-00014	155
01185-08016	119	01400-00010	180	02000-00008	126	02010-00014	161
01185-08016	122	01400-00012	1	02000-00008	127	02010-00014	169
01185-08016	124	01400-00012	86	02000-00010	7	02010-00014	169
01185-08016	125	01400-00012	88	02000-00010	11	02010-00014	169
01185-08016	143	01400-00012	90	02000-00010	13	02010-00014	169
01185-08016	143	01400-00012	92	02000-00010	74	02010-00014	177
01185-08020	12	01400-00012	93	02000-00010	77	02010-00016	75
01185-08020	30	01400-00012	157	02000-00010	100	02010-00016	93
01185-08020	33	01400-00012	180	02000-00010	119	02010-00016	118
01185-08020	36	01400-00018	157	02000-00010	131	02010-00016	164
01185-08020	55	01400-00018	164	02000-00010	179	02010-00016	170
01185-08020	174	01400-00018	172	02000-00012	71	02010-00016	172
01185-08025	51	01400-00018	173	02000-00012	93	02010-00016	178
01185-08025	52	01400-00018	179	02000-00012	100	02010-00020	64
01185-08025	127	01400-00018	180	02000-00012	163	02010-00030	117
01185-08030	122	01400-10020	64	02000-00012	163	02010-00036	116
01185-10016	122	01400-10020	65	02000-00012	163	02010-00036	117
01186-08025	45	01400-20010	13	02000-00012	171	02010-10006	74
01186-10016	147	01402-00006	55	02000-00014	71	02010-20010	157
01186-10020	13	01402-00008	38	02000-00016	170	02010-20010	165
01186-10020	174	01402-00008	55	02000-00016	178	02010-20010	165
01186-10030	77	01402-00008	99	02000-00022	57	02010-20010	173
01186-10030	77	01402-00008	108	02000-00024	56	02010-20010	173
01186-12025	94	01402-00008	109	02000-00030	74	02010-20010	180
01186-12025	118	01402-00008	110	02000-20010	157	02011-00008	53
01186-12040	94	01402-00010	101	02000-20010	165	02011-00008	56
01213-10025	55	01402-00010	102	02000-20010	165	02011-00008	57
01217-10030	1	01402-00010	103	02000-20010	173	02011-00008	63
01400-00004	46	01402-00010	131	02000-20010	173	02011-00008	63
01400-00006	23	01402-00010	153	02000-20010	180	02011-00008	69
01400-00006	46	01402-00010	159	02000-20016	164	02011-00008	74
01400-00006	99	01402-00010	167	02000-20016	172	02011-00010	57
01400-00006	119	01402-00010	175	02001-00012	118	02011-00010	59
01400-00006	121	01402-00012	179	02010-00004	14	02011-00010	63
01400-00006	128	01402-00012	180	02010-00004	40	02011-00010	69
01400-00008	12	01402-00016	179	02010-00004	46	02011-00010	72
01400-00008	30	01402-00018	164	02010-00006	23	02011-00010	164
01400-00008	31	01402-10014	71	02010-00006	46	02011-00010	172
01400-00008	32	01412-00030	74	02010-00006	99	02011-00010	179
01400-00008	36	01420-00006	23	02010-00006	119	02011-00012	1
01400-00008	36	02000-00004	14	02010-00006	121	02011-00012	64
01400-00008	36	02000-00004	46	02010-00006	128	02011-00012	86
01400-00008	38	02000-00005	100	02010-00008	11	02011-00012	88
01400-00008	40	02000-00005	137	02010-00008	12	02011-00012	90
01400-00008	48	02000-00005	138	02010-00008	40	02011-00012	92
01400-00008	49	02000-00005	139	02010-00008	51	02011-00014	157
01400-00008	51	02000-00005	140	02010-00008	52	02011-00014	165
01400-00008	52	02000-00006	23	02010-00008	129	02011-00014	173
01400-00008	63	02000-00006	55	02010-00008	130	02011-00016	156

PARTS NUMBER INDEX

Part No.	Fig.No.	Part No.	Fig.No.	Part No.	Fig.No.	Part No.	Fig.No.
02011-00016	162	02262-08025	103	03320-00180	136	04710-04150	174
02011-00016	170	02262-08025	104	03320-00180	158	04710-04150	181
02011-00016	178	02262-08045	126	03320-00180	166	04710-04155	174
02013-00012	118	02262-08045	127	03320-00180	166	04710-04160	158
02100-00020	57	02270-01014	158	03320-00180	174	04710-04160	181
02100-00020	71	02270-01014	166	03320-00180	174	04710-04165	158
02100-00022	57	02270-01014	174	03320-00180	174	04710-04165	174
02100-00025	56	02270-01014	181	03320-00180	181	04710-04165	181
02100-00030	58	02270-04020	63	03320-00180	181	04710-04170	158
02100-00040	62	02270-04035	63	03320-00180	181	04710-04170	158
02100-00040	157	02432-01008	149	03320-00210	179	04710-04170	174
02100-00040	164	02432-01008	168	03320-00240	136	04710-04175	158
02100-00040	172	03000-06207	58	03320-00240	165	04710-04175	174
02100-00040	173	03000-06208	58	03320-00280	158	04710-04175	181
02100-00040	180	03000-06208	58	03320-00280	166	04710-04180	158
02100-00045	154	03000-06208	61	03320-00290	131	04710-04180	158
02100-00045	160	03000-06210	68	03320-00340	165	04710-04180	174
02110-00014	179	03000-06306	58	03320-00340	180	04710-04180	181
02110-00018	158	03000-06306	58	03340-00090	179	04710-04185	158
02110-00018	166	03000-06306	61	03350-00750	93	04710-04185	181
02110-00018	174	03000-06306	62	03360-00210	179	04710-04190	144
02110-00018	181	03003-06306	58	04134-20303	143	04710-04190	158
02110-00022	63	03020-06904	71	04134-20404	174	04710-04190	174
02110-00028	179	03071-30207	74	04134-20404	181	04710-04190	181
02110-00030	63	03071-30211	74	04150-20202	73	04710-04195	158
02110-00035	93	03071-30214	65	04150-20202	136	04710-04195	158
02110-00037	71	03126-83201	74	04150-20202	136	04710-04195	158
02120-00038	58	03146-13201	74	04150-20303	73	04710-04195	174
02120-00040	58	03190-00006	165	04150-20404	136	04710-04200	174
02120-00040	61	03190-00006	165	04150-20404	166	04710-04200	174
02121-00058	62	03190-00013	57	04150-20404	174	04710-04200	181
02200-02020	103	03192-00012	65	04601-44241	174	04710-04205	158
02200-02020	104	03192-10012	65	04601-44266	174	04710-04205	174
02200-02020	126	03192-30072	58	04601-44290	174	04710-04205	181
02200-02020	127	03211-09501	65	04601-44294	181	04710-04205	181
02200-03020	100	03217-08501	74	04601-44320	174	04710-04210	158
02200-03030	164	03300-00160	57	04601-44323	181	04710-04210	181
02200-03030	172	03300-00180	57	04601-44339	174	04710-04215	158
02200-03030	173	03300-00280	174	04601-44343	181	04710-04215	174
02200-03030	179	03300-00280	181	04601-44364	174	04710-04220	158
02200-03030	180	03310-00300	57	04601-44367	181	04710-04220	174
02200-03040	157	03320-00110	73	04601-44371	174	04710-04225	158
02200-06055	74	03320-00110	136	04601-44375	181	04710-04225	174
02200-16010	55	03320-00110	136	04601-44408	174	04710-04230	158
02200-16010	100	03320-00140	73	04601-44450	174	04710-04230	158
02200-16010	137	03320-00140	73	04601-44493	174	04710-04230	158
02200-16010	138	03320-00140	73	04601-44525	174	04710-04235	174
02200-16010	139	03320-00140	136	04691-02035	143	04710-04240	158
02200-16010	140	03320-00140	143	04691-02035	143	04710-04240	174
02200-16015	100	03320-00140	146	04691-02038	143	04710-04250	158
02200-16015	102	03320-00140	158	04691-04123	142	04710-04250	158
02212-06016	63	03320-00140	158	04710-04005	114	04710-04260	158
02212-10020	64	03320-00140	166	04710-04110	158	04710-04260	174
02212-10020	69	03320-00140	166	04710-04120	158	04710-04265	158
02212-12020	57	03320-00140	166	04710-04130	158	04710-04265	174
02212-12020	59	03320-00140	174	04710-04135	158	04710-04275	158
02262-06015	55	03320-00140	174	04710-04145	158	04710-04280	174
02262-06015	100	03320-00140	181	04710-04145	158	04710-04285	158
02262-06020	55	03320-00140	181	04710-04145	158	04710-04285	174
02262-06020	102	03320-00180	131	04710-04150	174	04710-04295	158

PARTS NUMBER INDEX

Part No.	Fig.No.	Part No.	Fig.No.	Part No.	Fig.No.	Part No.	Fig.No.
04710-04295	174	06701-65010	89	09001-10083	172	12N43-42321	58
04710-04300	158	06710-60015	83	09001-10085	173	12N43-42351	58
04710-04300	174	06711-60015	83	09001-10089	164	12N43-42401	57
04710-04320	158	06711-65010	86	09001-10091	173	12N43-42411	57
04710-04330	158	06711-65010	87	09001-10097	164	12N43-42421	57
04710-04355	158	06711-65010	88	09001-10097	173	12N43-42431	57
04901-00100	56	06711-65010	89	10A63-10201	56	12N43-42441	57
04901-00100	147	06731-00120	83	11243-82081	62	12N43-42471	57
04901-00100	156	06731-00120	85	11243-82091	62	12N43-42481	57
04901-00100	162	06806-60015	84	11243-82161	62	12N43-42501	57
04901-00100	170	06806-65010	90	11243-82181	62	12N43-42511	57
04901-00100	178	06806-65010	91	11243-82211	62	12N43-42521	57
04901-00190	56	06806-81515	80	115G3-82111	59	12N43-42551	58
04901-00190	74	06807-28915	80	115G3-82241	59	12N43-42561	58
04901-00190	74	06807-65010	90	115G3-82251	59	12N43-42571	58
04901-00190	75	06807-65010	90	115G3-82351	62	12N43-42581	58
04901-00190	101	06807-65010	90	115G3-82361	62	12N52-50201	54
04901-00190	102	06807-81515	80	115G3-82671	63	12N53-22001	68
04901-00191	74	06807-81515	80	116H3-82101	59	12N53-22011	68
04911-00020	144	06841-60015	84	116H3-82101	61	12N53-32001	66
04911-00021	158	06841-65010	90	116H3-82101	63	12N53-32011	66
04911-00021	158	06843-60015	84	116H3-82201	63	12N53-50201	67
04911-00021	174	06843-65010	90	117M7-10401	131	12N53-50231	67
04911-00021	174	06851-60015	84	118H3-82231	63	12N53-50301	69
04911-00023	146	06853-65010	90	12N42-50201	53	12N53-52031	69
04911-00040	8	09001-10035	164	12N43-10211	56	12N53-52061	69
04911-00040	142	09001-10039	164	12N43-12001	56	12N53-52081	69
04911-00042	142	09001-10039	172	12N43-12011	56	12N53-52091	69
04911-00044	8	09001-10041	164	12N43-12021	56	12N53-52101	69
04911-00044	142	09001-10043	172	12N43-12101	56	12N53-52111	69
04911-00046	142	09001-10045	164	12N43-12111	56	12N53-52121	69
04911-00060	3	09001-10045	164	12N43-12151	56	12N53-52131	69
04911-00065	3	09001-10047	164	12N43-12201	56	12N53-52141	69
04913-10200	19	09001-10047	172	12N43-19801	56	12N53-52151	69
04913-10200	20	09001-10051	164	12N43-19801	58	12N53-52161	69
04913-11100	103	09001-10051	172	12N43-19811	57	12N53-52171	69
04913-11100	104	09001-10051	173	12N43-40251	58	12N53-52181	69
04913-11380	96	09001-10053	164	12N43-42001	57	12N53-52191	69
04914-00019	114	09001-10053	172	12N43-42031	57	12N53-52201	69
04914-00019	166	09001-10055	164	12N43-42051	58	12N53-52211	69
06005-60015	83	09001-10055	173	12N43-42061	58	12N53-52221	69
06005-65010	88	09001-10057	164	12N43-42071	58	12N53-52231	69
06005-65010	89	09001-10057	172	12N43-42101	58	12N53-52241	69
06005-81515	79	09001-10059	164	12N43-42111	58	12N53-52251	69
06005-81515	85	09001-10059	164	12N43-42121	58	12N53-52271	69
06005-81515	85	09001-10059	172	12N43-42131	58	12N53-52291	69
06006-60015	83	09001-10059	173	12N43-42141	58	12N53-52341	69
06006-65010	86	09001-10063	173	12N43-42151	58	12N53-52351	69
06006-65010	87	09001-10065	164	12N43-42161	58	12N53-52381	69
06006-65010	88	09001-10065	172	12N43-42171	58	12N53-52431	69
06006-65010	89	09001-10067	173	12N43-42191	58	12N53-52441	69
06007-60015	83	09001-10069	164	12N43-42201	58	12N53-52451	69
06007-65010	88	09001-10071	172	12N43-42211	58	12N53-52461	69
06007-65010	89	09001-10071	173	12N43-42221	58	12N53-52471	69
06007-81515	79	09001-10071	173	12N43-42251	58	12N53-52481	69
06007-81515	85	09001-10073	164	12N43-42261	58	12N53-52491	69
06007-81515	85	09001-10077	164	12N43-42271	58	12N53-52501	69
06701-65010	86	09001-10077	173	12N43-42281	58	12N53-52511	69
06701-65010	87	09001-10079	172	12N43-42291	58	12N53-59801	69
06701-65010	88	09001-10081	164	12N43-42301	58	12N53-59811	69

PARTS NUMBER INDEX

Part No.	Fig.No.	Part No.	Fig.No.	Part No.	Fig.No.	Part No.	Fig.No.
12N53-59821	69	12N53-89811	59	209K2-42021	26	214A0-62151	166
12N53-80201	62	12N53-89831	63	209K2-42041	25	214A0-72701	170
12N53-80301	59	12003-12021	56	209K2-42041	26	214A0-72701	178
12N53-80311	59	12003-42052	57	209K2-42351	19	214A0-82681	164
12N53-80321	60	12003-42061	57	209K2-42351	20	214A0-82681	172
12N53-80341	63	12003-42251	58	209K2-42351	40	214A0-82831	156
12N53-82001	59	12003-42451	57	209K2-42351	51	214A0-82831	164
12N53-82011	59	12003-42461	57	209K2-42351	52	214A0-82831	172
12N53-82021	59	12163-82331	59	209K2-43001	124	214A2-12001	7
12N53-82041	59	12163-82421	59	209K2-43001	125	214A2-12001	11
12N53-82061	56	12163-82541	57	209P6-42831	9	214A2-12021	7
12N53-82061	59	12163-82541	59	209P6-42831	123	214A2-12111	7
12N53-82081	59	12163-82541	61	209P6-42831	126	214A2-12121	7
12N53-82091	61	12163-82561	60	209P6-42831	127	214A2-12141	7
12N53-82101	62	124G3-52011	69	210F2-42021	25	214A2-12201	7
12N53-82111	62	124T3-42651	67	210F2-42021	26	214A2-13001	7
12N53-82131	62	124T3-42661	67	210F2-42031	25	214A2-13011	7
12N53-82151	61	124T3-43041	12	210F2-42031	26	214A2-22071	10
12N53-82161	61	130C2-60302	46	21152-42091	19	214A2-42331	21
12N53-82171	61	134A3-42071	58	21152-42091	20	214A2-42331	22
12N53-82201	58	134A3-52041	69	21152-42091	52	214A2-42331	102
12N53-82201	61	134A3-52051	69	212Y0-50501	164	214A2-42611	7
12N53-82211	58	134B3-82401	62	212Y0-50511	164	214A2-42611	19
12N53-82211	61	134G3-82111	62	212Y0-50521	164	214A2-42611	20
12N53-82221	63	134G3-82121	62	212Y0-50531	164	214A2-42611	35
12N53-82231	63	134G3-82131	62	212Y0-50541	164	214A2-42611	35
12N53-82251	63	134G3-82141	62	212Y0-50551	164	214A2-42611	37
12N53-82291	63	134G3-89811	62	212Y0-50561	164	214A2-42611	50
12N53-82321	63	134G3-89831	62	212Y0-50571	164	214A2-42611	51
12N53-82331	63	135C3-12081	56	212Y0-50581	164	214A2-42611	52
12N53-82351	63	139B3-82121	63	212Y0-50591	164	214A2-42621	19
12N53-82361	63	14603-52131	69	212Y0-50601	164	214A2-42621	20
12N53-82371	63	15573-42021	58	212Y0-50611	164	214A2-42621	47
12N53-82401	63	15573-42151	57	212Y0-50621	164	214A2-42621	48
12N53-82421	63	15573-42151	63	212Y0-50631	164	214A2-42621	49
12N53-82451	63	15573-42151	64	212Y0-50641	164	214A2-44001	39
12N53-82481	63	15583-82101	61	212Y0-50651	164	214A2-52002	55
12N53-82501	63	15583-82411	63	212Y0-80501	172	214A2-52012	55
12N53-82531	63	15583-82421	63	212Y0-80511	172	214A4-12161	71
12N53-82551	63	15583-82441	63	212Y0-80521	172	214A4-32041	74
12N53-82571	63	15583-82451	63	212Y0-80531	172	214A4-32051	74
12N53-82581	63	15583-82461	63	212Y0-80541	172	214A4-32161	74
12N53-82621	54	15583-82521	59	212Y0-80551	172	214A4-32201	75
12N53-82621	59	15583-82521	61	212Y0-80561	172	214A4-32211	75
12N53-82621	66	15583-82571	61	212Y0-80571	172	214A5-22001	100
12N53-82621	69	15943-83261	59	212Y0-80581	172	214A5-32312	103
12N53-82641	60	16113-52121	69	212Y0-80591	172	214A5-32312	110
12N53-82641	66	16113-52141	69	212Y0-80601	172	214A5-33012	110
12N53-82701	63	16402-54331	43	212Y0-82001	164	214A5-33031	110
12N53-82711	59	16402-54331	47	212Y0-82001	172	214A5-33041	110
12N53-82721	63	16402-54331	48	212Y0-82101	164	214A5-33052	110
12N53-82731	63	16402-54331	49	212Y0-82101	172	214A5-33062	110
12N53-82741	63	20A75-20201	100	21232-32551	11	214A5-53012	150
12N53-82751	63	20A75-22001	100	21232-32551	13	214A6-42252	97
12N53-82761	59	205A2-63311	46	21237-52051	112	214A6-42771	123
12N53-82771	63	20801-02141	10	21237-52051	112	214A6-42771	123
12N53-82781	63	209K2-40501	18	21237-52062	112	214A6-42781	128
12N53-82791	63	209K2-42002	25	21237-52062	112	214A6-42781	128
12N53-89801	59	209K2-42002	26	213T1-02011	2	214A7-42071	55
12N53-89801	61	209K2-42021	25	213T1-02021	2	214A7-42071	55

PARTS NUMBER INDEX

Part No.	Fig.No.	Part No.	Fig.No.	Part No.	Fig.No.	Part No.	Fig.No.
214A7-42071	137	214J0-53681	165	214J8-10631	159	216G2-40602	32
214A7-42071	137	214J0-53781	165	214J8-10631	167	216G2-40602	33
214A7-42071	138	214J3-02011	65	214J8-10631	175	216G2-40701	24
214A7-42071	138	214J8-10501	153	214J8-10641	153	216G2-40711	24
214A7-42071	138	214J8-10501	153	214J8-10641	159	216G2-40721	24
214A7-42071	139	214J8-10501	159	214J8-10641	167	216G2-40731	24
214A7-42071	139	214J8-10501	159	214J8-10641	175	216G2-42311	19
214A7-42071	139	214J8-10501	167	214J8-10651	153	216G2-42311	20
214A7-42071	139	214J8-10501	167	214J8-10651	159	216G2-43111	23
214A7-42071	140	214J8-10501	175	214J8-10651	167	216G2-43401	19
214A7-42071	140	214J8-10501	175	214J8-10651	175	216G2-43401	20
214A7-42071	140	214J8-10511	153	214J8-10661	153	216G2-43411	19
214A7-42071	140	214J8-10511	159	214J8-10661	159	216G2-43411	20
214A7-42071	140	214J8-10511	167	214J8-10661	167	216G2-43421	19
214A7-42181	141	214J8-10511	175	214J8-10661	175	216G2-43421	20
214A7-42181	141	214J8-10521	153	214J8-10671	153	216G2-43502	24
214A7-42181	141	214J8-10521	159	214J8-10671	159	216G2-43502	30
214A7-42181	141	214J8-10521	167	214J8-10671	167	216G2-43502	31
214A7-42191	141	214J8-10521	175	214J8-10671	175	216G2-43502	32
214A7-42201	141	214J8-10531	153	214J8-10681	153	216G2-43502	33
214A8-02201	156	214J8-10531	159	214J8-10681	159	216G2-43531	24
214A8-02201	162	214J8-10531	167	214J8-10681	167	216G2-43531	30
214A8-02201	170	214J8-10531	175	214J8-10681	175	216G2-43531	31
214A8-02201	178	214J8-10541	153	214J8-11002	153	216G2-43531	32
214A8-42571	165	214J8-10541	159	214J8-11002	159	216G2-43531	33
214A8-42571	165	214J8-10541	167	214J8-11002	167	216G2-43542	24
214A8-42661	157	214J8-10541	175	214J8-11002	175	216G2-43542	30
214A8-42661	165	214J8-10551	153	214J8-42721	180	216G2-43542	31
214A8-42661	173	214J8-10551	159	214J8-42721	180	216G2-43542	32
214A8-42661	179	214J8-10551	167	214J8-46001	180	216G2-43542	33
214A8-42661	180	214J8-10551	175	214J8-46001	180	216G2-43551	24
214A8-44151	158	214J8-10561	153	214T0-83501	179	216G2-43551	30
214A8-44151	166	214J8-10561	159	214T0-83511	179	216G2-43551	31
214A8-44151	174	214J8-10561	167	214T0-83521	179	216G2-43551	32
214A8-44151	181	214J8-10561	175	214T0-83531	179	216G2-43551	33
214A8-46001	165	214J8-10571	153	214T0-83541	179	216G2-43562	24
214A8-46001	165	214J8-10571	159	214T8-43011	179	216G2-43562	30
214A8-52051	74	214J8-10571	167	215E4-32341	74	216G2-43562	31
214A8-52051	93	214J8-10571	175	215E4-39801	74	216G2-43562	32
214A9-20101	152	214J8-10581	153	215E4-52231	93	216G2-43562	33
214J0-51701	165	214J8-10581	159	215E8-42171	173	216G2-43571	24
214J0-51711	165	214J8-10581	167	215E8-42171	173	216G2-43571	30
214J0-51721	165	214J8-10581	175	215E8-42181	173	216G2-43571	31
214J0-51731	165	214J8-10591	153	215E8-42181	173	216G2-43571	32
214J0-51741	165	214J8-10591	159	215K0-82701	157	216G2-43571	33
214J0-51751	165	214J8-10591	167	215K0-82701	173	216G2-43582	24
214J0-51761	165	214J8-10591	175	215K0-82701	180	216G2-43582	30
214J0-51771	165	214J8-10601	153	216G0-93101	174	216G2-43582	31
214J0-51781	165	214J8-10601	159	216G0-93101	181	216G2-43582	32
214J0-51791	165	214J8-10601	167	216G0-93151	174	216G2-43582	33
214J0-51801	165	214J8-10601	175	216G1-02451	2	216G2-43592	24
214J0-51811	165	214J8-10611	153	216G1-02461	2	216G2-43592	30
214J0-51821	165	214J8-10611	159	216G1-02471	2	216G2-43592	31
214J0-51831	165	214J8-10611	167	216G1-02481	2	216G2-43592	32
214J0-51841	165	214J8-10611	175	216G1-02491	2	216G2-43592	33
214J0-51851	165	214J8-10621	153	216G1-02501	2	216G2-43602	24
214J0-51861	165	214J8-10621	159	216G2-22051	10	216G2-43602	30
214J0-51871	165	214J8-10621	167	216G2-40602	24	216G2-43602	31
214J0-51881	165	214J8-10621	175	216G2-40602	30	216G2-43602	32
214J0-53681	165	214J8-10631	153	216G2-40602	31	216G2-43602	33

PARTS NUMBER INDEX

Part No.	Fig.No.	Part No.	Fig.No.	Part No.	Fig.No.	Part No.	Fig.No.
216G2-43611	24	216G8-33401	178	22N45-40202	101	22N54-32211	74
216G2-43611	30	216G8-52301	156	22N45-40302	101	22N54-32221	74
216G2-43611	31	216G8-52301	162	22N45-42101	101	22N54-32231	74
216G2-43611	32	216G8-52301	170	22N50-73191	174	22N54-32241	74
216G2-43611	33	216G8-52301	178	22N50-92101	174	22N54-32311	75
216G2-43622	24	216G8-53001	148	22N50-92101	181	22N54-32321	75
216G2-43622	30	216G8-53011	148	22N51-00161	1	22N54-32351	74
216G2-43622	31	216G9-12052	150	22N51-00201	1	22N54-32361	74
216G2-43622	32	216G9-12062	150	22N51-00211	1	22N54-32401	74
216G2-43622	33	216G9-12071	150	22N52-22101	115	22N54-32402	74
216G2-43631	24	216G9-12071	151	22N52-22201	113	22N54-32481	74
216G2-43631	30	216G9-12131	150	22N52-22201	115	22N54-32501	74
216G2-43631	31	216G9-12131	151	22N52-32021	13	22N54-32511	74
216G2-43631	32	216H3-92171	119	22N52-40301	14	22N54-32801	74
216G2-43631	33	216H3-92171	126	22N52-42021	19	22N54-32941	74
216G2-43651	19	216H3-92171	127	22N52-42021	20	22N54-32971	74
216G2-43651	20	216H3-92281	123	22N52-42031	19	22N54-50201	93
216G2-43711	19	216H3-92281	123	22N52-42031	20	22N54-50221	93
216G2-43711	20	216H5-42141	119	22N52-42101	19	22N54-52001	93
216G4-12101	71	216H7-82111	146	22N52-42101	20	22N54-52101	93
216G4-12111	71	217G2-32001	11	22N52-42111	23	22N54-52121	93
216G5-32201	108	217G2-32001	12	22N52-42201	16	22N54-52141	93
216G5-32331	108	217G2-42021	23	22N52-42251	25	22N54-52151	93
216G5-32341	108	217G2-42301	19	22N52-42301	23	22N54-52201	93
216G5-42011	103	217G2-42301	20	22N52-42311	19	22N54-52251	93
216G6-42451	119	217M1-02001	3	22N52-42311	20	22N54-59801	93
216G6-42481	119	217M2-12221	8	22N52-42321	19	22N55-10161	94
216G6-42541	119	22B51-02201	3	22N52-42321	20	22N55-12271	95
216G6-42541	119	22N40-72191	178	22N52-42331	19	22N55-12281	95
216G6-42921	121	22N40-74311	179	22N52-42331	20	22N55-12571	96
216G6-42931	121	22N40-74501	179	22N52-42501	14	22N55-12701	97
216G6-43561	118	22N40-81001	181	22N52-42511	14	22N55-12711	97
216G6-52161	122	22N40-81091	181	22N52-43001	19	22N55-12721	97
216G6-52291	119	22N40-82201	181	22N52-43001	20	22N55-12901	99
216G6-52291	122	22N40-82221	181	22N53-02071	65	22N55-13181	94
216G6-52291	126	22N40-82251	181	22N53-02151	64	22N55-13181	118
216G6-52291	127	22N40-82801	181	22N53-02201	70	22N55-13191	94
216G7-32021	132	22N41-00201	1	22N53-02212	70	22N55-20201	100
216G7-32021	133	22N42-42201	15	22N53-02601	64	22N55-20211	100
216G7-32021	134	22N43-90201	55	22N53-02611	64	22N55-22011	100
216G7-32021	135	22N43-90211	55	22N54-10201	71	22N55-22031	100
216G7-52051	113	22N43-90301	55	22N54-10301	72	22N55-22121	100
216G7-52201	114	22N43-90511	55	22N54-10311	72	22N55-22131	100
216G8-33351	170	22N43-92201	55	22N54-12011	71	22N55-40202	102
216G8-33351	178	22N43-92301	55	22N54-12021	71	22N55-40302	102
216G8-33361	156	22N43-92701	55	22N54-12022	71	22N55-40402	102
216G8-33361	162	22N43-92711	55	22N54-12201	124	22N55-42101	102
216G8-33361	170	22N43-92731	55	22N54-12201	125	22N55-42141	103
216G8-33361	170	22N43-92901	55	22N54-12311	124	22N55-42141	104
216G8-33361	178	22N43-92911	55	22N54-12311	125	22N55-42171	105
216G8-33361	178	22N43-93001	55	22N54-12321	124	22N55-42171	106
216G8-33371	156	22N43-93011	55	22N54-12321	125	22N55-42601	102
216G8-33371	162	22N43-93021	55	22N54-30101	74	22N55-50101	111
216G8-33371	170	22N43-93031	55	22N54-30102	74	22N56-32041	116
216G8-33371	170	22N45-30303	101	22N54-30121	74	22N56-40101	118
216G8-33371	178	22N45-32101	105	22N54-30122	74	22N56-40202	119
216G8-33371	178	22N45-32131	105	22N54-32131	74	22N56-40203	119
216G8-33401	156	22N45-32151	103	22N54-32151	74	22N56-40252	126
216G8-33401	162	22N45-32161	103	22N54-32181	74	22N56-40262	126
216G8-33401	170	22N45-32201	103	22N54-32201	74	22N56-40272	126

PARTS NUMBER INDEX

Part No.	Fig.No.	Part No.	Fig.No.	Part No.	Fig.No.	Part No.	Fig.No.
22N56-40272	127	22N56-43911	128	22N57-42161	137	22N58-52801	147
22N56-40302	120	22N56-43921	128	22N57-42161	138	22N58-52811	147
22N56-40361	119	22N56-43931	128	22N57-42161	139	22N58-52821	147
22N56-40371	120	22N56-50201	122	22N57-42201	132	22N58-52831	147
22N56-40401	120	22N56-50211	122	22N57-42201	133	22N58-52841	147
22N56-40411	126	22N56-50212	122	22N57-42201	134	22N58-52851	147
22N56-40421	126	22N56-52201	122	22N57-42201	135	22N58-52861	147
22N56-40451	119	22N56-52222	122	22N57-42211	132	22N58-52871	147
22N56-40461	119	22N56-52231	122	22N57-42211	133	22N58-52901	147
22N56-40471	119	22N56-52241	122	22N57-42211	134	22N58-52911	147
22N56-42041	118	22N56-52251	122	22N57-42211	135	22N58-52921	147
22N56-42602	121	22N56-52302	123	22N57-52101	114	22N58-52931	147
22N56-42612	121	22N56-52311	123	22N57-52102	114	22N58-52941	147
22N56-42701	124	22N56-52321	123	22N57-52302	113	22N58-53001	148
22N56-42701	125	22N56-52351	122	22N57-62101	142	22N58-53101	148
22N56-42711	128	22N56-52351	122	22N57-62201	142	22N58-53101	148
22N56-42721	128	22N56-52361	122	22N57-62221	145	22N59-12041	149
22N56-42731	124	22N56-52402	122	22N57-62401	145	22N59-12051	149
22N56-42731	125	22N57-30221	132	22N57-62451	145	22N59-12061	149
22N56-42741	124	22N57-30231	133	22N57-62531	145	22N59-12101	149
22N56-42741	125	22N57-30241	134	22N57-62801	143	22N59-12111	149
22N56-42751	124	22N57-30251	135	22N57-63001	142	22N59-12261	150
22N56-42751	125	22N57-30321	132	22N57-63011	136	22N59-12351	150
22N56-42761	128	22N57-30331	133	22N57-80201	146	22N80-50201	179
22N56-42771	125	22N57-30341	134	22N58-32701	154	22N80-50221	179
22N56-42791	124	22N57-30351	135	22N58-32701	160	22N80-50231	179
22N56-42791	125	22N57-32041	132	22N58-32701	168	22N80-50261	179
22N56-42811	128	22N57-32041	133	22N58-32701	176	22N80-50401	179
22N56-42811	128	22N57-32041	134	22N58-32711	154	22N80-50421	179
22N56-42851	128	22N57-32041	135	22N58-32711	160	22N80-50431	179
22N56-42861	124	22N57-40011	137	22N58-32711	168	22N80-50461	179
22N56-42861	125	22N57-40011	138	22N58-32711	176	22N80-50601	179
22N56-42901	123	22N57-40011	139	22N58-34501	156	22N80-50621	179
22N56-42911	123	22N57-40011	140	22N58-34601	156	22N80-50631	179
22N56-43021	128	22N57-40021	137	22N58-43011	157	22N80-50661	179
22N56-43021	128	22N57-40021	138	22N58-43011	165	22N80-52601	179
22N56-43021	128	22N57-40021	139	22N58-43011	165	22N80-70201	178
22N56-43021	128	22N57-40021	140	22N58-43011	180	22N80-70231	178
22N56-43031	128	22N57-40031	138	22N58-45001	158	22N80-70241	178
22N56-43041	119	22N57-40031	139	22N58-45001	174	22N80-70251	178
22N56-43051	119	22N57-40031	140	22N58-45001	181	22N80-70261	178
22N56-43221	119	22N57-40041	139	22N58-50101	147	22N80-70401	178
22N56-43251	126	22N57-40041	140	22N58-50111	147	22N80-70431	178
22N56-43251	127	22N57-40051	140	22N58-50121	147	22N80-70441	178
22N56-43271	119	22N57-42001	137	22N58-50131	147	22N80-70451	178
22N56-43281	119	22N57-42001	138	22N58-50141	147	22N80-70461	178
22N56-43411	128	22N57-42001	139	22N58-50201	147	22N80-70601	178
22N56-43421	128	22N57-42001	140	22N58-50211	147	22N80-70631	178
22N56-43421	128	22N57-42101	137	22N58-50221	147	22N80-70641	178
22N56-43421	128	22N57-42101	138	22N58-50231	147	22N80-70651	178
22N56-43421	128	22N57-42101	139	22N58-50241	147	22N80-70661	178
22N56-43431	128	22N57-42101	140	22N58-50301	148	22N80-80261	179
22N56-43531	119	22N57-42121	137	22N58-50311	148	22N80-80461	179
22N56-43531	120	22N57-42121	138	22N58-50311	148	22N80-80661	179
22N56-43541	119	22N57-42121	139	22N58-50311	148	22N80-90201	176
22N56-43771	128	22N57-42121	140	22N58-50311	148	22N85-42301	105
22N56-43801	128	22N57-42151	137	22N58-52101	147	22N85-42401	105
22N56-43831	128	22N57-42151	138	22N58-52111	147	22N90-40201	162
22N56-43871	128	22N57-42151	139	22N58-52121	147	22N90-40211	162
22N56-43881	128	22N57-42151	140	22N58-52301	147	22N90-40221	162

PARTS NUMBER INDEX

Part No.	Fig.No.	Part No.	Fig.No.	Part No.	Fig.No.	Part No.	Fig.No.
22N90-40231	162	22N90-70601	170	22N98-30301	156	22U52-12001	8
22N90-40241	162	22N90-70611	170	22N98-30311	156	22U52-12011	8
22N90-40251	162	22N90-70621	170	22N98-30321	156	22U52-12201	6
22N90-40261	162	22N90-70631	170	22N98-30331	156	22U52-30111	13
22N90-40271	162	22N90-70641	170	22N98-30341	156	22U52-42151	23
22N90-40281	162	22N90-70651	170	22N98-30351	156	22U52-42211	22
22N90-40291	162	22N90-70661	170	22N98-30361	156	22U55-22102	100
22N90-40301	162	22N90-70671	170	22N98-30371	156	22U57-62001	142
22N90-40311	162	22N90-70681	170	22N98-30381	156	22018-30121	154
22N90-40321	162	22N90-70691	170	22N98-30401	156	22018-30121	160
22N90-40331	162	22N90-70701	170	22N98-30411	156	22018-30121	168
22N90-40341	162	22N90-81601	173	22N98-30421	156	22018-30121	176
22N90-40351	162	22N90-81611	173	22N98-30431	156	22018-30261	154
22N90-40361	162	22N90-81621	173	22N98-30441	156	22018-30261	160
22N90-40371	162	22N90-81631	173	22N98-30451	156	22018-30261	168
22N90-40381	162	22N90-81641	173	22N98-30461	156	22018-30261	176
22N90-40401	162	22N90-81651	173	22N98-30471	156	22132-40041	27
22N90-40411	162	22N90-81661	173	22N98-30481	156	22132-40041	28
22N90-40421	162	22N90-81671	173	22N98-30491	156	22132-40202	27
22N90-40431	162	22N90-81681	173	22N98-30501	156	22132-40202	28
22N90-40441	162	22N90-81691	173	22N98-30511	156	22192-22091	10
22N90-40451	162	22N90-81701	173	22N98-30521	156	22192-42411	27
22N90-40461	162	22N90-90101	168	22N98-30531	156	22192-42411	28
22N90-40471	162	22N90-90152	174	22N98-30541	156	22193-03001	64
22N90-40481	162	22N90-90161	174	22N98-30551	156	22199-12401	56
22N90-40491	162	22N92-30101	11	22N98-30561	156	22199-12401	74
22N90-40501	162	22N93-00302	64	22N98-30571	156	22199-12401	74
22N90-40511	162	22N93-00602	64	22N98-30581	156	22199-12401	75
22N90-40521	162	22N93-00612	64	22N98-40201	157	22199-12401	93
22N90-40531	162	22N93-02001	65	22N98-40211	157	22199-12401	101
22N90-40541	162	22N93-70101	70	22N98-40221	157	22199-12401	102
22N90-40551	162	22N93-70201	70	22N98-40231	157	22199-12401	147
22N90-40561	162	22N95-42302	106	22N98-40241	157	22199-12401	147
22N90-40571	162	22N95-42402	106	22N98-40251	157	22199-22001	152
22N90-50511	164	22N96-12201	77	22N98-40261	157	22199-22251	152
22N90-50521	164	22N96-12211	77	22N98-40271	157	22199-22261	152
22N90-50531	164	22N97-62381	143	22N98-40281	157	222A2-10211	4
22N90-60201	160	22N97-62391	143	22N98-40291	157	222A2-10211	5
22N90-70201	170	22N98-10501	153	22N98-40301	157	222A2-22061	115
22N90-70211	170	22N98-10501	159	22N98-40311	157	222A2-42031	124
22N90-70221	170	22N98-10501	167	22N98-40321	157	222A2-42031	125
22N90-70231	170	22N98-10501	175	22N98-40331	157	222A2-42511	27
22N90-70241	170	22N98-10511	153	22N98-40341	157	222A2-42511	28
22N90-70251	170	22N98-10511	159	22N98-40351	157	222A6-42451	120
22N90-70261	170	22N98-10511	167	22N98-40361	157	222A6-42461	120
22N90-70271	170	22N98-10511	175	22N98-40371	157	222A9-32011	99
22N90-70281	170	22N98-20201	154	22N98-40381	157	222Q9-12011	149
22N90-70291	170	22N98-22001	169	22N99-12151	149	22208-40031	164
22N90-70301	170	22N98-22111	169	22N99-12161	149	22208-40031	172
22N90-70401	170	22N98-22121	169	22N99-12171	149	22208-40031	173
22N90-70411	170	22N98-30201	156	22N99-12181	149	22214-30321	74
22N90-70421	170	22N98-30211	156	22N99-12281	149	22218-40191	157
22N90-70431	170	22N98-30221	156	22N99-12601	149	22218-40191	164
22N90-70441	170	22N98-30231	156	22S57-82001	146	22218-40191	172
22N90-70451	170	22N98-30241	156	22U42-42211	21	22218-40191	173
22N90-70461	170	22N98-30251	156	22U51-00101	1	22218-40191	179
22N90-70471	170	22N98-30261	156	22U51-00201	1	22218-40191	180
22N90-70481	170	22N98-30271	156	22U51-00211	1	22218-42111	164
22N90-70491	170	22N98-30281	156	22U51-00301	2	22218-42111	172
22N90-70501	170	22N98-30291	156	22U51-02601	3	22218-42111	173

PARTS NUMBER INDEX

Part No.	Fig.No.	Part No.	Fig.No.	Part No.	Fig.No.	Part No.	Fig.No.
22252-32241	11	22438-45871	157	229L0-51221	165	234A8-42511	165
22252-32241	13	22438-45871	180	229L0-51231	165	234A8-42551	157
22252-32251	7	22438-45891	157	229L0-51241	165	234A8-42551	165
22252-32251	11	22438-45891	157	229L0-51251	165	234A8-42551	165
22256-42001	27	22438-45891	172	229L0-51261	165	234A8-42551	173
22256-42001	28	22438-45891	173	229L0-51271	165	234A8-42551	173
22256-42001	29	22438-45891	173	229L0-51281	165	234A8-42551	180
22256-42001	119	22438-45911	164	229L0-51291	165	234A8-42561	165
224G2-32011	13	22438-45931	180	229L0-51301	165	234A8-42561	165
224G5-42061	103	22438-45931	180	229L0-51311	165	234A8-42561	173
224G5-42061	104	22438-45951	164	229L0-51321	165	234A8-42561	173
224T8-42701	179	22438-45971	157	229L0-51331	165	234A8-42571	165
224T8-42711	179	22438-45971	173	229L0-51341	165	234A8-42571	165
224T8-46001	179	22438-45991	172	229L0-51351	165	234A8-42571	173
224T8-46011	179	22438-46011	157	229L0-51361	165	234A8-42571	173
224T8-52291	179	22438-46011	164	229L0-51371	165	234A8-42602	158
224T8-53021	148	22438-46051	172	229L0-51381	165	234A8-42602	166
22438-45431	164	22438-46051	173	230C2-42201	22	234A8-42602	174
22438-45471	172	22438-46071	157	230C2-42201	51	234A8-42602	181
22438-45491	164	22438-46111	157	230C2-42201	52	234A8-42611	158
22438-45511	164	22438-46131	164	23019-20011	152	234A8-42611	166
22438-45531	172	22438-46151	157	231A0-82001	164	234A8-42611	174
22438-45551	157	22438-46151	173	231A0-82001	172	234A8-42611	181
22438-45551	164	22438-46211	173	232A8-42201	165	234A8-42622	158
22438-45571	164	22438-46231	164	232A8-42201	165	234A8-42622	166
22438-45571	172	22438-46271	157	232A8-42201	173	234A8-42622	174
22438-45571	179	22438-46371	157	232A8-42201	173	234A8-42622	181
22438-45591	157	22439-44031	78	232L8-42601	180	234A8-43501	157
22438-45591	164	22439-44031	79	232L8-42601	180	234A8-43501	164
22438-45631	164	22439-44031	85	232L8-42621	180	234A8-43501	172
22438-45631	172	22439-44031	85	232L8-42621	180	234A8-43501	173
22438-45631	173	225A7-62021	131	232L8-42631	180	234A8-43501	180
22438-45631	179	225R6-32001	117	232L8-42631	180	234F0-52501	165
22438-45651	157	225R6-42031	55	232L8-49801	180	234F0-52501	165
22438-45651	164	225R6-42031	124	232L8-49801	180	234F0-59801	165
22438-45671	172	225R6-42031	125	23232-42072	21	234F0-59801	165
22438-45671	179	225R9-12101	117	23232-42072	22	234F4-40302	86
22438-45691	157	22517-40051	137	23235-40091	107	234F4-40302	88
22438-45691	157	22517-40051	138	23322-22011	10	234F8-10501	153
22438-45691	164	22517-40051	139	234A0-52611	165	234F8-10501	159
22438-45691	173	22517-40051	140	234A0-52611	165	234F8-10501	167
22438-45731	164	22517-40051	157	234A0-62051	166	234F8-10501	175
22438-45731	164	22517-40051	173	234A0-62111	166	234F8-10511	153
22438-45731	164	22655-42591	104	234A2-12201	4	234F8-10511	159
22438-45731	172	22658-52301	93	234A2-12201	5	234F8-10511	167
22438-45731	172	22658-52301	179	234A2-12211	4	234F8-10511	175
22438-45731	173	22679-43831	165	234A2-12211	5	234F8-10521	153
22438-45731	179	22679-43831	180	234A2-42301	39	234F8-10521	159
22438-45731	179	22717-40061	100	234A6-43121	120	234F8-10521	167
22438-45751	157	22717-40081	157	234A8-02201	158	234F8-10521	175
22438-45771	180	22717-40081	173	234A8-40611	165	234F8-10531	153
22438-45791	157	229F0-94101	174	234A8-40611	165	234F8-10531	159
22438-45791	173	229F0-94101	181	234A8-40701	158	234F8-10531	167
22438-45811	157	229F2-22071	115	234A8-40701	166	234F8-10531	175
22438-45811	164	229F2-22151	113	234A8-40701	174	234F8-10541	153
22438-45811	172	229F2-22151	115	234A8-40701	181	234F8-10541	159
22438-45831	173	229F2-22171	115	234A8-41001	181	234F8-10541	167
22438-45831	180	229G0-52251	179	234A8-41101	158	234F8-10541	175
22438-45851	157	229L0-51201	165	234A8-41101	166	234F8-10551	153
22438-45851	164	229L0-51211	165	234A8-42511	165	234F8-10551	159

PARTS NUMBER INDEX

Part No.	Fig.No.	Part No.	Fig.No.	Part No.	Fig.No.	Part No.	Fig.No.
234F8-10551	167	234F8-22111	161	239A2-12021	7	24329-45541	61
234F8-10551	175	234F8-22111	169	239A2-12141	4	24329-45541	63
234F8-10561	153	234F8-22121	161	239A2-40501	17	24329-45541	179
234F8-10561	159	234F8-22121	169	239A2-42221	24	24329-46201	158
234F8-10561	167	234F8-22201	155	239A2-42221	24	24329-46201	174
234F8-10561	175	234F8-22201	161	239A2-42301	19	24329-46201	181
234F8-10571	153	234F8-22201	177	239A2-42301	20	24329-46201	181
234F8-10571	159	234F8-41001	158	239A2-42311	19	24450-52571	165
234F8-10571	167	234F8-41001	166	239A2-42311	20	24450-52571	165
234F8-10571	175	234F8-41001	174	239A4-12402	71	24450-52571	165
234F8-10581	153	23451-02011	13	239A4-12411	71	24450-52571	165
234F8-10581	159	23452-42181	23	239A4-12431	71	24450-92021	161
234F8-10581	167	23453-02071	65	239A4-12441	71	24450-92021	169
234F8-10581	175	23453-02091	65	239A4-12541	124	24453-02061	65
234F8-10591	153	23453-02131	65	239A5-40501	103	24453-02102	65
234F8-10591	159	23457-42041	138	239A5-40501	108	24454-32232	74
234F8-10591	167	23457-42041	139	239A5-42301	107	24454-40201	78
234F8-10591	175	23460-53161	179	239A5-42471	105	24454-40201	79
234F8-10601	153	23460-53171	93	239A9-12301	150	24454-40201	85
234F8-10601	159	23460-53181	179	239A9-12501	150	24454-40211	78
234F8-10601	167	23647-40041	137	239A9-92001	99	24454-40211	79
234F8-10601	175	23652-12051	7	239A9-92001	99	24454-40211	85
234F8-10611	153	23652-12051	11	239B2-10102	5	24454-40211	85
234F8-10611	159	23652-12051	57	239B2-12141	4	24454-40221	78
234F8-10611	167	23652-44001	44	239B2-12141	5	24454-40221	79
234F8-10611	175	23654-32041	74	23913-02041	76	24454-40221	85
234F8-10621	153	23654-32161	74	23917-42191	165	24459-42291	180
234F8-10621	159	23654-34051	76	23917-42191	180	24459-42291	180
234F8-10621	167	23655-22101	100	23918-52161	165	24459-42381	164
234F8-10621	175	23655-22101	119	23918-52161	165	24459-42381	172
234F8-10631	153	23655-42421	101	23918-52171	165	24459-42381	179
234F8-10631	159	23655-42421	101	23918-52171	165	24459-42391	157
234F8-10631	167	23655-42421	102	240A5-42411	105	24459-42391	164
234F8-10631	175	23655-42421	102	242F6-80101	129	24459-42391	172
234F8-10641	153	23656-42601	63	242F6-80201	130	24459-42391	173
234F8-10641	159	23657-12002	131	242F6-82041	129	24459-42391	179
234F8-10641	167	23657-42131	138	242F6-82041	130	24459-42391	180
234F8-10641	175	23658-42531	173	242F6-82051	129	24459-42951	158
234F8-10651	153	23658-52101	147	242F6-82051	130	24459-42951	166
234F8-10651	159	23658-52101	147	242F6-82081	129	24459-42951	174
234F8-10651	167	23658-52401	147	242F6-82091	129	24459-42951	181
234F8-10651	175	23658-52401	147	242F6-82101	129	24499-22011	152
234F8-10661	153	23659-12101	151	242F6-82101	130	246B2-43221	51
234F8-10661	159	23678-06002	156	242F6-82111	129	246B2-43221	52
234F8-10661	167	23678-06002	162	242F6-82111	130	24629-44201	179
234F8-10661	175	23678-06002	170	242F6-82121	129	24662-22032	10
234F8-10671	153	23678-06002	178	242F6-82121	130	24662-22131	10
234F8-10671	159	23678-42301	165	242F6-82141	129	247C2-43301	51
234F8-10671	167	23678-42301	165	242F6-82271	129	247C2-43301	52
234F8-10671	175	23772-12071	4	242F6-82281	129	247C2-43501	52
234F8-10681	153	23772-12071	5	242F6-82361	130	247C2-43601	51
234F8-10681	159	23775-42101	104	242F6-82371	130	247C2-43601	52
234F8-10681	167	238A2-42151	23	24235-42091	107	24868-42111	157
234F8-10681	175	238F9-12071	150	24237-62331	73	24868-42111	173
234F8-12101	153	23813-00071	76	243C6-40021	119	24868-42111	173
234F8-12101	159	23813-00081	76	243C6-42821	126	25303-02102	65
234F8-12101	167	23819-20011	152	243C7-80201	73	25592-42081	23
234F8-12101	175	23819-20021	152	24320-52001	165	25592-42121	115
234F8-22101	161	23870-52871	136	24320-55001	179	25595-42411	109
234F8-22101	169	239A2-10102	4	24329-45541	59	25595-42421	109

PARTS NUMBER INDEX

Part No.	Fig.No.	Part No.	Fig.No.	Part No.	Fig.No.	Part No.	Fig.No.
25595-42452	108	27682-62131	52	277P8-32701	170	277T0-51611	165
25595-42452	109	277H7-60601	136	277P8-32701	178	277T0-51621	165
25595-42452	110	277N0-82021	158	277T0-51001	165	277T0-51631	165
25595-42482	109	277N0-82021	166	277T0-51011	165	277T0-51641	165
25595-42491	103	277N0-82021	174	277T0-51021	165	277T0-51651	165
25595-42491	104	277P0-83001	179	277T0-51031	165	277T0-51661	165
25595-42501	109	277P8-22051	154	277T0-51041	165	277T0-51671	165
25599-22051	152	277P8-22051	156	277T0-51051	165	277T0-51681	165
25599-22061	152	277P8-22051	156	277T0-51061	165	277T0-51691	165
25599-32001	119	277P8-22051	160	277T0-51071	165	277T0-51701	165
25599-32021	119	277P8-22051	162	277T0-51081	165	277T0-51711	165
256C1-08011	2	277P8-22051	162	277T0-51091	165	277T0-51721	165
256C1-12111	100	277P8-22051	168	277T0-51101	165	277T0-51731	165
256C2-42231	23	277P8-22051	170	277T0-51111	165	277T0-51741	165
256C6-32011	1	277P8-22051	170	277T0-51121	165	277T0-51751	165
256C9-52372	1	277P8-22051	170	277T0-51131	165	277T0-51761	165
256T2-42121	124	277P8-22051	176	277T0-51141	165	277T0-51771	165
256T2-42121	125	277P8-22051	178	277T0-51151	165	277T0-51781	165
25785-43091	103	277P8-22051	178	277T0-51161	165	277T0-60301	166
25786-32031	116	277P8-22051	178	277T0-51171	165	277T0-60311	166
25786-32031	117	277P8-22061	154	277T0-51181	165	277T0-60321	166
25790-94021	174	277P8-22061	156	277T0-51201	165	277T0-60331	166
25790-94021	181	277P8-22061	160	277T0-51211	165	277T0-60341	166
26062-42881	35	277P8-22061	162	277T0-51221	165	277T0-60351	166
26062-42881	35	277P8-22061	168	277T0-51231	165	277T0-60361	166
26062-42881	37	277P8-22061	170	277T0-51241	165	277T0-60371	166
26062-42881	47	277P8-22061	170	277T0-51251	165	277T0-60381	166
26062-42881	48	277P8-22061	176	277T0-51261	165	277T0-60391	166
26062-42881	49	277P8-22061	178	277T0-51271	165	277T0-60401	166
26062-42881	50	277P8-22061	178	277T0-51281	165	277T0-60411	166
26519-12281	150	277P8-22071	154	277T0-51291	165	277T0-60421	166
26602-42041	74	277P8-22071	156	277T0-51301	165	277T0-60431	166
26602-42101	174	277P8-22071	156	277T0-51311	165	277T0-60441	166
26602-42221	143	277P8-22071	160	277T0-51321	165	277T0-60451	166
26602-42221	143	277P8-22071	162	277T0-51331	165	277T0-60461	166
27042-42312	46	277P8-22071	162	277T0-51341	165	277T0-60471	166
27042-42322	146	277P8-22071	168	277T0-51351	165	277T0-60481	166
27042-64311	46	277P8-22071	170	277T0-51361	165	277T0-62051	166
27045-40302	103	277P8-22071	170	277T0-51371	165	277T0-62071	166
27045-40302	104	277P8-22071	170	277T0-51381	165	277T0-81002	180
27045-40302	109	277P8-22071	176	277T0-51401	165	277T0-81032	180
27045-42371	104	277P8-22071	178	277T0-51411	165	277T0-81042	180
27049-12172	149	277P8-22071	178	277T0-51421	165	277T0-81052	180
271A7-52301	113	277P8-22071	178	277T0-51431	165	277T0-81062	180
271A7-60351	131	277P8-22081	154	277T0-51441	165	277T0-81202	180
271A9-12251	150	277P8-22081	156	277T0-51451	165	277T0-81232	180
272K8-52201	156	277P8-22081	156	277T0-51461	165	277T0-81242	180
272K8-52201	162	277P8-22081	160	277T0-51471	165	277T0-81252	180
272K8-52201	170	277P8-22081	162	277T0-51481	165	277T0-81262	180
272K8-52201	178	277P8-22081	162	277T0-51491	165	277T0-81401	180
273A6-42471	122	277P8-22081	168	277T0-51501	165	277T0-81401	180
273A9-12242	149	277P8-22081	170	277T0-51511	165	277T0-81431	180
27397-52101	59	277P8-22081	170	277T0-51521	165	277T0-81431	180
27419-12061	151	277P8-22081	170	277T0-51531	165	277T0-81441	180
27419-12062	150	277P8-22081	176	277T0-51541	165	277T0-81441	180
27419-12071	151	277P8-22081	178	277T0-51551	165	277T0-81451	180
27419-12072	150	277P8-22081	178	277T0-51561	165	277T0-81451	180
27662-62721	94	277P8-22081	178	277T0-51571	165	277T0-81461	180
27662-63711	96	277P8-32701	156	277T0-51581	165	277T0-81461	180
27682-62131	51	277P8-32701	162	277T0-51601	165	277T0-81602	180

PARTS NUMBER INDEX

Part No.	Fig.No.	Part No.	Fig.No.	Part No.	Fig.No.	Part No.	Fig.No.
277T0-81632	180	514A1-41001	36	516G6-92031	45	52N53-72101	16
277T0-81642	180	514A1-41001	48	516G6-92151	45	52N53-72201	74
277T0-81652	180	514A1-41001	49	516G9-10101	38	52N53-72211	74
277T0-81662	180	514A1-41011	36	516G9-12011	38	52N53-72301	16
277T0-81802	180	514A1-41021	36	516M5-12301	99	52N53-74001	160
277T0-81832	180	514A1-41031	36	52E00-52191	128	52N53-74001	168
277T0-81842	180	514A1-42041	40	52E00-52201	128	52N54-60221	132
277T0-81852	180	514A2-42201	93	52N43-72101	15	52N54-60231	133
277T0-81862	180	514A2-72411	141	52N50-80201	12	52N54-60241	134
27732-42221	96	514A2-72411	141	52N50-80211	12	52N54-60251	135
27732-42311	38	514A2-72411	141	52N50-80221	12	52N55-00101	94
27732-42311	40	514A2-82012	151	52N50-80301	12	52N55-00111	94
278M2-42061	111	514A3-72052	74	52N50-82001	12	52N55-00121	94
278M2-42061	111	514A3-72062	74	52N50-82011	12	52N55-00131	94
278M6-42031	123	514A3-72091	25	52N50-82021	12	52N55-00141	94
278M6-42031	123	514A3-72101	76	52N51-30201	39	52N55-00501	99
278M6-42031	123	514A3-72211	74	52N51-31001	39	52N55-00511	97
278M6-42031	123	514A3-82002	151	52N51-32001	39	52N55-00521	97
27912-62441	111	514A3-82301	168	52N51-32011	39	52N55-00551	99
27970-53141	165	514A3-82321	168	52N51-32101	39	52N55-02451	25
27970-53141	165	514A3-82331	168	52N51-42101	34	52N55-12001	98
27978-42371	180	514A3-82341	168	52N51-42101	35	52N55-12011	98
27978-42371	180	514A3-82351	168	52N51-42111	34	52N55-12101	95
27978-42371	180	514A3-82361	168	52N51-42111	34	52N55-12111	95
27978-42371	180	514A3-82371	168	52N51-42111	35	52N55-30401	119
27978-42411	180	514A3-82381	168	52N51-42111	35	52N55-30402	119
27978-42411	180	514A3-82391	168	52N51-42121	34	52N55-30451	120
27978-42421	180	514A5-12011	94	52N51-42121	35	52N55-30501	127
27978-42421	180	514A5-12011	94	52N51-42151	31	52N55-30511	127
27978-42601	179	514A5-12021	95	52N51-42151	32	52N55-32051	123
27979-43101	158	514A5-12021	96	52N51-42151	33	52N55-32061	123
27979-43101	166	514A5-12021	98	52N51-42161	30	52N55-32091	123
27979-43101	174	514A5-32341	40	52N51-42161	32	52N55-32091	123
27979-43101	181	514J3-72051	76	52N51-42301	30	52N55-32101	123
27980-82701	180	514J6-82201	87	52N51-42301	31	52N55-32111	123
27980-82701	180	514J6-82201	89	52N51-42301	32	52N55-32141	128
280C2-42301	18	514J6-82211	87	52N51-42401	34	52N55-32171	120
280C2-42311	18	514J6-82211	89	52N51-42401	34	52N55-32211	77
280C2-42331	17	514J6-82211	91	52N51-42401	35	52N55-32301	127
280C2-42331	18	514J6-82231	91	52N51-42401	35	52N55-32311	127
280C2-42341	18	514T6-82021	82	52N51-42411	34	52N55-32331	122
280C2-42351	17	516G0-60101	2	52N51-42411	34	52N55-32401	128
280C2-42351	18	516G0-62011	2	52N51-42411	35	52N55-32401	128
281E6-42521	124	516G1-42111	35	52N51-42411	35	52N55-32411	128
281E6-42521	125	516G1-42111	35	52N51-42511	34	52N55-32411	128
281E6-42571	124	516G1-42111	40	52N51-42511	34	52N55-40081	128
281E6-42571	125	516G1-42211	37	52N51-42511	35	52N55-40211	120
281E7-42101	141	516G1-42211	40	52N51-70301	11	52N55-40411	128
281E7-62041	145	516G2-72051	116	52N52-32001	16	52N55-42251	128
282M8-32501	165	516G2-72701	151	52N52-72101	151	52N55-42301	24
29590-64501	4	516G2-72711	151	52N52-72201	151	52N55-42601	123
29590-64501	5	516G2-82051	151	52N52-82401	151	52N55-42611	123
3956323	42	516G2-82061	151	52N52-82501	151	52N56-12051	42
509K2-30101	18	516G3-82801	151	52N52-90201	94	52N56-20101	14
509K2-82251	151	516G5-13051	94	52N53-70101	74	52N56-22011	50
509K3-82681	151	516G5-13151	94	52N53-70102	74	52N56-22021	50
509K3-83451	151	516G6-85011	92	52N53-70121	74	52N56-22021	51
509P9-90101	29	516G6-92001	45	52N53-70122	74	52N56-22021	52
509S3-92261	123	516G6-92011	45	52N53-70201	74	52N56-22201	129
509S3-92261	123	516G6-92022	45	52N53-70202	74	52N56-22401	50

PARTS NUMBER INDEX

Part No.	Fig.No.	Part No.	Fig.No.	Part No.	Fig.No.	Part No.	Fig.No.
52N56-72001	41	52N59-92101	27	529F1-42251	48	53651-12551	2
52N56-92001	45	52N59-92101	29	529F1-42251	49	53652-82541	151
52N56-92101	45	52N59-92201	26	529F3-70401	137	53652-82551	151
52N56-92201	45	52N59-92201	26	529F3-70411	138	53656-82001	84
52N56-92211	45	52N59-92501	29	529F3-70411	139	53657-42053	83
52N57-E2001	51	52N91-61201	160	529F3-70421	140	53658-43001	165
52N57-E2001	52	52N91-61211	160	529F3-82101	168	53658-43001	180
52N57-E2011	51	52N91-61301	168	529F3-82111	168	53658-43011	165
52N57-E2011	52	52N91-61311	168	529F7-52241	47	53658-43011	180
52N57-E2201	51	52N91-70101	11	529F7-52241	49	53658-43021	165
52N57-E2201	52	52N91-70201	11	530C1-42001	30	53658-43021	180
52N57-50101	43	52N93-91901	178	530C1-42001	33	53658-43031	165
52N57-50301	43	52N93-91931	178	531A0-52521	28	53658-43031	180
52N57-52001	47	52N93-91941	178	532A1-70201	11	53658-43041	165
52N57-52001	48	52N93-91951	178	532A1-70201	12	53658-43041	180
52N57-52001	49	52N93-91961	178	534A2-74051	161	53675-55051	158
52N57-52031	47	52N97-42001	77	534A2-74051	169	53675-55051	174
52N57-52031	48	52N97-42011	77	534A2-74301	161	53675-55051	181
52N57-52031	49	52N97-42021	77	534A2-74301	169	538B6-60302	5
52N57-52051	46	52N97-42031	77	534A3-82311	151	539A0-82201	12
52N57-52061	46	52N97-42041	77	534A3-82421	151	539A2-82051	151
52N57-52101	46	52N97-42051	77	534A3-82531	151	539A5-32361	28
52N57-52111	46	52U56-52001	6	534A4-22001	96	539A6-22021	23
52N57-52151	46	521A2-42001	23	534A4-22011	96	539A6-52051	9
52N57-52161	46	521A2-42061	44	534A5-00401	99	539A6-52151	9
52N57-60451	120	522A1-10201	2	534A5-00411	99	539A6-60302	4
52N57-72001	124	522A2-42001	23	534A7-02001	23	539A7-52041	46
52N57-72001	125	522Q6-80301	84	534A7-50601	47	539A7-52101	48
52N58-10201	122	522Q6-80311	84	534A7-50601	48	539A7-52101	49
52N58-10211	126	522Q6-80321	84	534A7-50601	49	539A8-22151	40
52N58-10221	126	522Q6-80402	90	534A9-22001	96	539A8-92251	36
52N58-10301	122	522Q6-80412	90	534A9-22011	96	539A8-92251	48
52N58-10301	126	522Q6-80422	90	534A9-22211	24	539A8-92251	49
52N58-10311	123	522Q6-82001	80	534A9-92131	28	539A9-02011	38
52N58-12201	122	522Q6-82011	80	534F1-64401	161	539A9-32001	99
52N58-12501	122	522Q6-82021	80	534F1-64401	169	539F6-80201	80
52N58-12501	126	52356-80302	86	534F1-64411	161	539F6-80301	90
52N58-12511	122	52356-80302	88	534F1-64411	169	539F7-40401	79
52N58-12511	126	52356-80302	90	534F2-74001	161	539F7-40401	85
52N58-22001	40	52356-80302	92	534F2-74001	169	539F7-40411	85
52N58-22101	40	524T3-84031	168	534F3-82001	86	539F7-40501	83
52N58-82001	44	524W5-12091	94	534F3-82001	88	539F7-40511	88
52N58-82101	44	52436-80701	90	534F3-82001	90	539F7-40521	89
52N58-92001	37	52436-80701	90	534F3-82001	92	539F7-40601	79
52N58-92021	37	52436-82101	78	534F6-80171	81	539F7-40601	85
52N58-92021	48	52436-82101	79	534F6-80271	92	539F7-40611	85
52N58-92021	49	52436-82101	85	534F6-80402	80	539F7-40701	83
52N58-92041	37	52436-82101	85	534F6-80412	80	539F7-40711	88
52N58-92111	35	52436-82111	78	534F6-80422	80	539F7-40721	89
52N58-92111	35	52436-82111	79	534F6-83002	82	542F3-80101	129
52N58-92111	37	52436-82111	85	534F6-85001	81	542F3-80201	130
52N58-92201	36	52436-82111	85	534F7-40502	80	542F3-82011	129
52N58-92211	36	52436-82121	78	534F7-40502	80	542F3-82011	130
52N58-92251	36	52436-82121	79	53456-82052	84	54236-83011	87
52N59-02001	38	52436-82121	85	53456-82062	84	54236-83011	89
52N59-20411	119	52436-82121	85	53457-42151	83	54236-83011	91
52N59-20412	119	52436-82151	82	535C8-92051	36	54236-83021	87
52N59-92021	98	52672-82073	151	535H3-82261	111	54236-83021	89
52N59-92031	98	529F1-42201	36	536G2-82181	151	54236-83021	91
52N59-92051	98	529F1-42251	36	536G2-82281	151	54236-83031	87

PARTS NUMBER INDEX

Part No.	Fig.No.	Part No.	Fig.No.	Part No.	Fig.No.	Part No.	Fig.No.
54236-83031	89	63110-18921	149				
54236-83031	91	63110-18921	168				
54315-32561	39	63130-15301	170				
54456-80201	85	63130-15301	178				
54456-80211	85	641B0-12701	96				
54456-80421	83	641B0-12751	96				
54456-82201	80	97103-35431	93				
54456-82201	81						
54456-82224	80						
54456-82224	81						
54457-40201	84						
55593-02371	140						
55593-62551	166						
55792-52601	46						
55792-52611	46						
55792-52621	46						
55792-52641	46						
558A9-92001	27						
558A9-92001	28						
558A9-92001	47						
558A9-92001	49						
57045-52151	76						
571A3-82361	151						
571A6-82081	90						
577H2-82021	151						
577H3-82151	151						
577H5-13051	99						
577P3-74001	160						
577P3-74001	162						
577P3-74001	168						
577P3-74001	170						
577P3-74001	170						
577P3-74001	170						
577P3-74011	160						
577P3-74011	162						
577P3-74011	168						
577P3-74011	170						
577P3-74011	170						
577P8-74001	162						
58106-31011	23						
62A89-21811	163						
62A89-21811	171						
62A89-21831	163						
62A89-21831	163						
62A89-21831	171						
62A89-21831	171						
62A89-21851	163						
62A89-21851	163						
62A89-21851	163						
62A89-21851	171						
62050-12331	170						
62050-12331	178						
62150-14321	181						
62459-23371	163						
62459-23371	163						
62459-23371	163						
62459-23371	171						
63056-56501	82						
63110-18901	168						
63110-18911	168						

No.PF−2U8A
2006年　3月　発行

TCM株式会社
本　社　大阪市西区京町堀1−15−10
発 行　TCMテクノ株式会社

ISSUED:MARCH,2006

TCM CORPORATION
INTERNATIONAL MARKETING DIVISION : 1-15-5, Nishi−shimbashi, Minato−ku, Tokyo
105−0003, Japan
FAX : Japan +81−3−35918152, 3−35918153

無断で転載・複製を禁ず
All rights reserved.

SA−0603001(H)　Printed in Japan